# CAMSHAFT (1AZ–FE)

## COMPONENTS

141BG–01

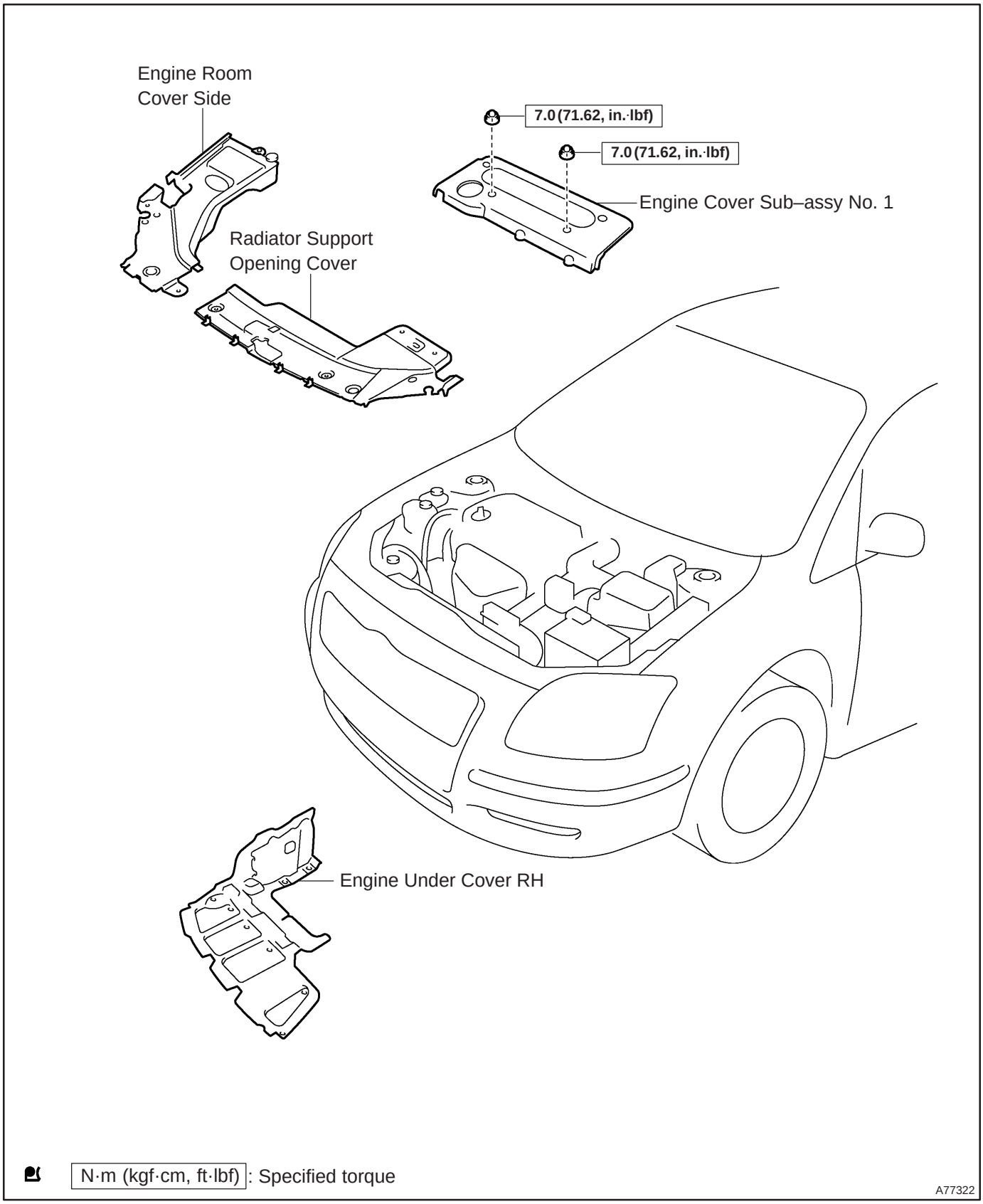


cardiagn.com

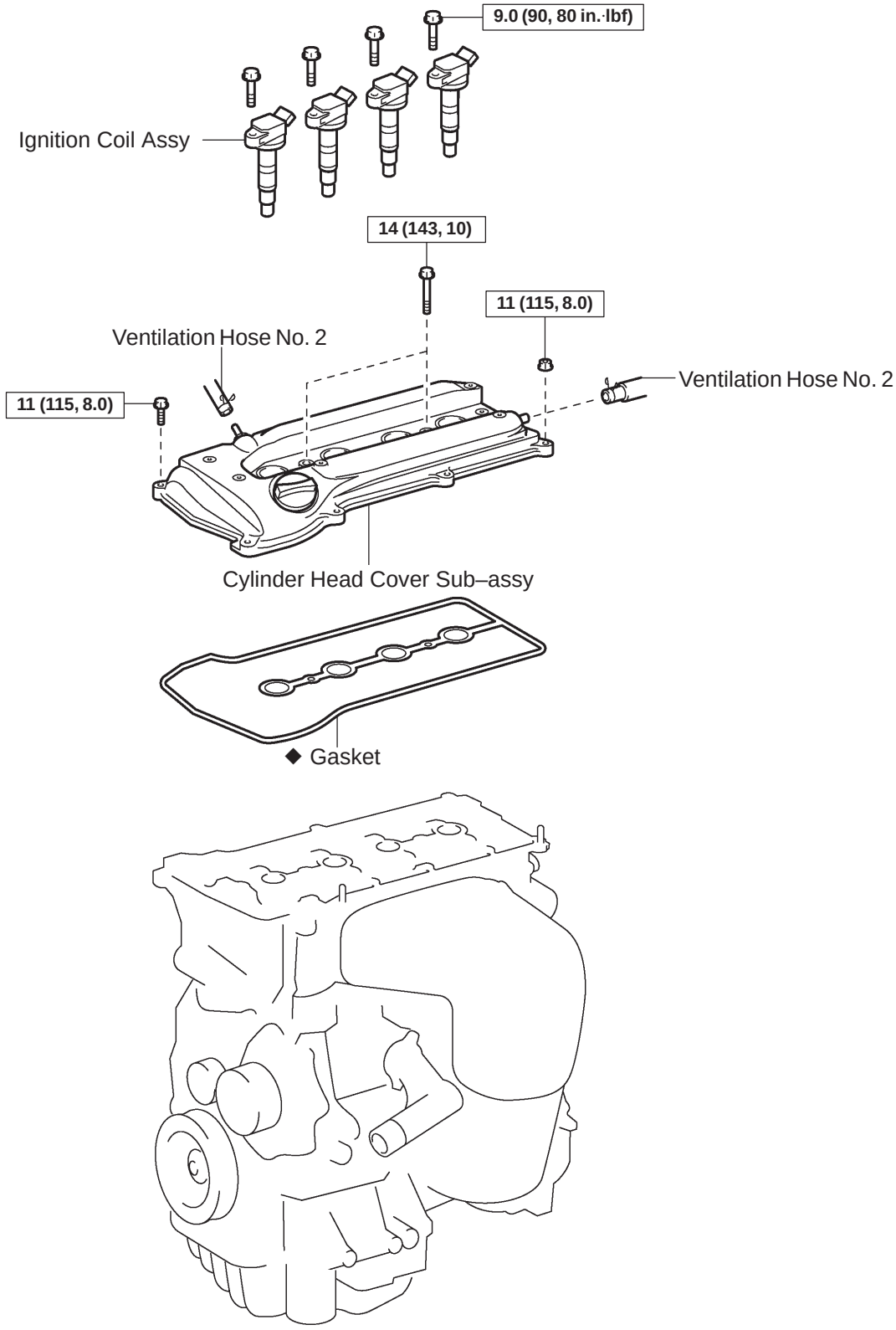


N·m (kgf·cm, ft·lbf) : Specified torque

◆ Non–reusable part

A77320

cardiagn.com

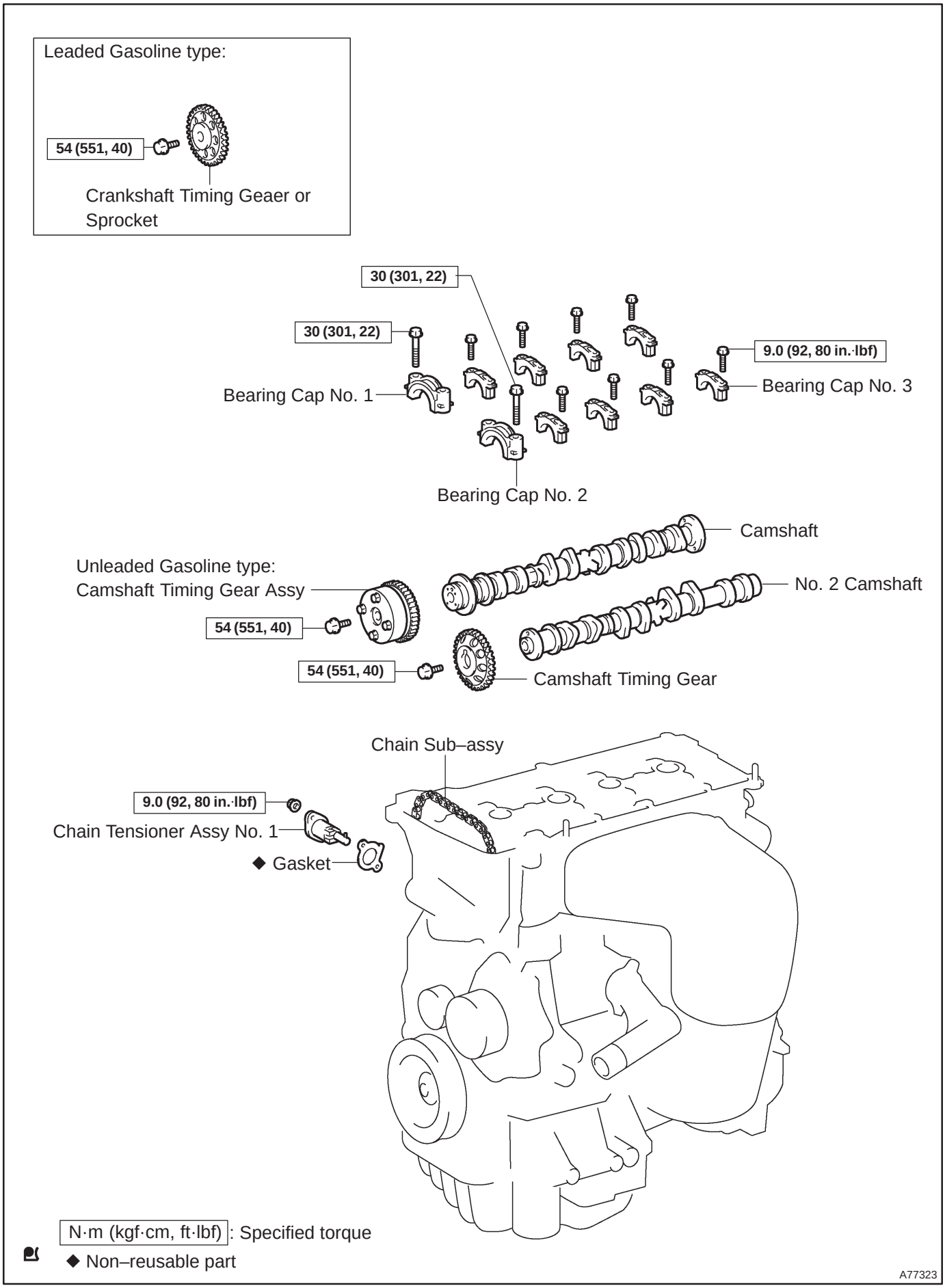


cardiagn.com

141BK–01

# REPLACEMENT

**1. REMOVE RADIATOR SUPPORT OPENING COVER**

**2. REMOVE ENGINE ROOM COVER SIDE**

**3. REMOVE ENGINE UNDER COVER RH**

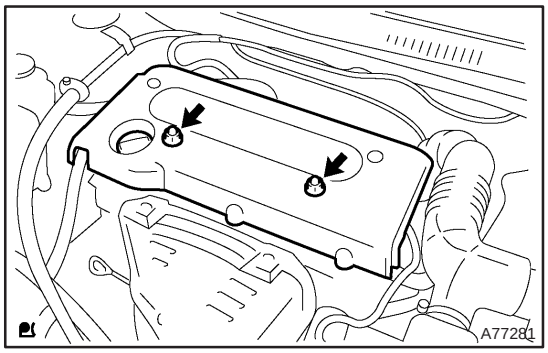


**4. REMOVE ENGINE COVER SUB–ASSY NO.1**

(a) Remove the 2 nuts and the engine cover No. 1.

**5. REMOVE IGNITION COIL ASSY**

(a) Remove 4 bolts and the ignition coils.

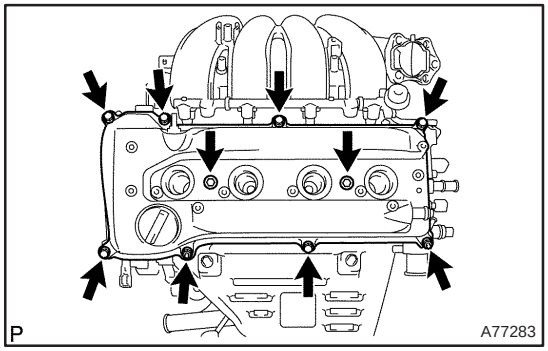


**6. REMOVE CYLINDER HEAD COVER SUB–ASSY**

(a) Disconnect the 2 PCV hoses from the cylinder head cover.

(b) Remove the 8 bolts and 2 nuts, and then remove the cylinder head cover and gasket.

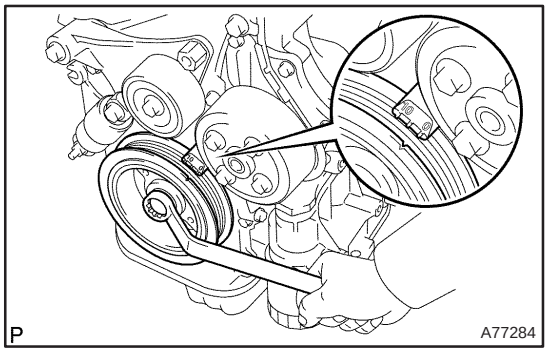


**7. SET NO. 1 CYLINDER TO TDC/COMPRESSION**

(a) Turn the crankshaft pulley, and align its timing notch with timing mark 0 of the timing chain cover.

cardiagn.com

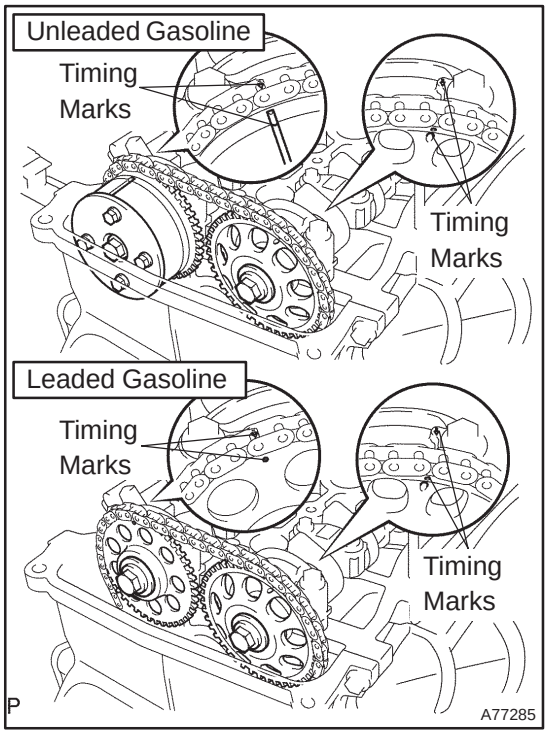


(b) Check that each timing mark of the camshaft timing gears is aligned with each timing mark located on the No. 1 and No. 2 bearing caps as shown in the illustration.

If not, turn the crankshaft 1 revolution (360°) and align the marks as above.

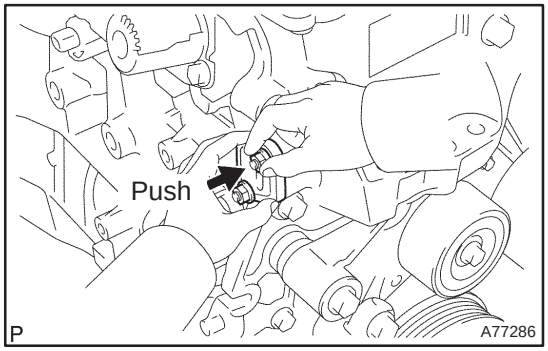


**8. REMOVE CHAIN TENSIONER ASSY NO.1**

(a) Remove the 2 nuts, then remove the chain tensioner and a gasket.

**NOTICE:**

**Do not turn the crankshaft.**

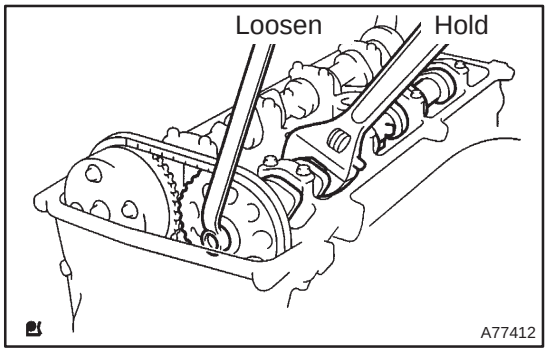


**9. REMOVE NO.2 CAMSHAFT**

(a) Hold the No. 2 camshaft with a wrench on the hexagonal lobe, and loosen the camshaft timing gear set bolt.

**NOTICE:**

**Be careful not to damage the cylinder head and valve lifter with the wrench.**

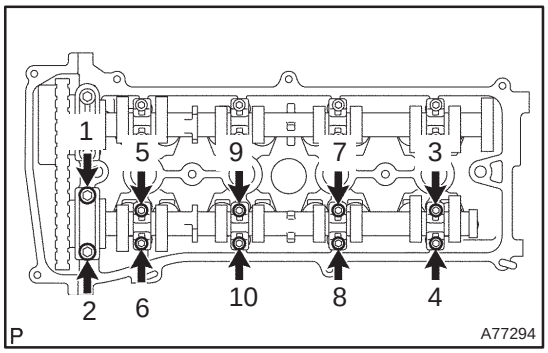


(b) Using several steps, loosen and remove the 10 camshaft bearing cap bolts uniformly in the sequence shown in the illustration.

(c) Remove the 5 camshaft bearing caps.

cardiagn.com

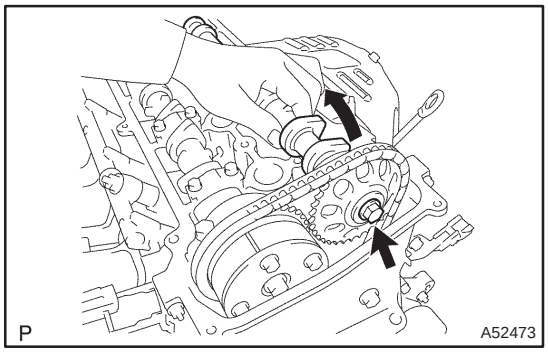


(d) Raising the No. 2 camshaft, remove the set bolt.
(e) Remove the camshaft timing gear from the No. 2 camshaft with the timing chain wrapped.
(f) Remove the camshaft timing gear from the timing chain.

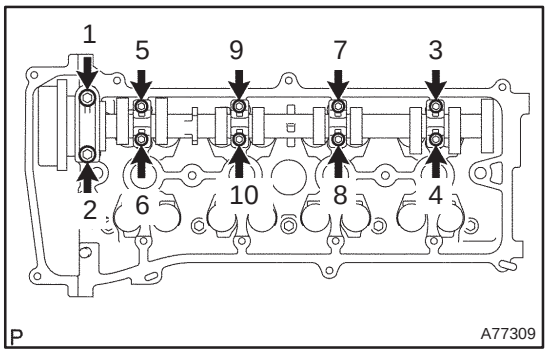


**10. REMOVE CAMSHAFT**
(a) Using several steps, loosen and remove the 10 camshaft bearing cap bolts uniformly in the sequence shown in the illustration.
(b) Remove the 5 camshaft bearings.
(c) Remove the camshaft.

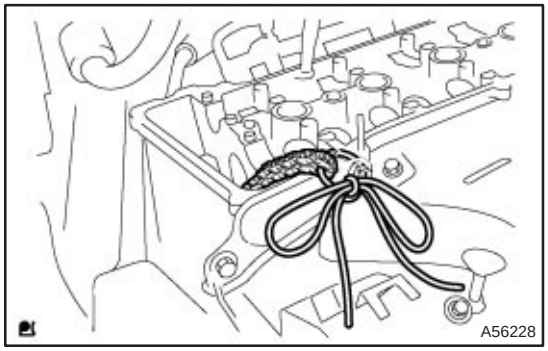


(d) Tie the timing chain as shown in the illustration.

**NOTICE:**
- **Be careful not to drop anything inside the timing chain cover.**
- **Do not expose the chain to water, and prevents dust.**

**11. REMOVE CAMSHAFT TIMING GEAR OR SPROCKET (LEADED GASOLINE)**
(a) Clamp the camshaft in a vise and remove the bolt and the camshaft timing gear.

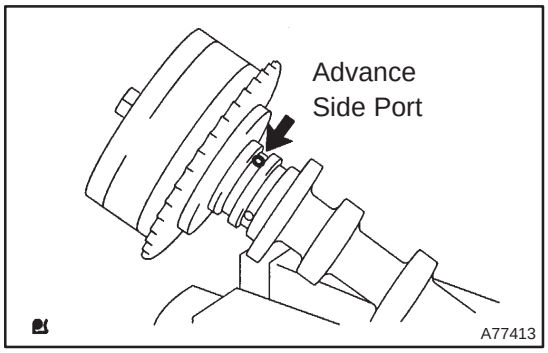


**12. REMOVE CAMSHAFT TIMING GEAR ASSY (UNLEADED GASOLINE)**
(a) Fix the camshaft with a vise, and make sure the camshaft timing gear does not rotate.
(b) Cover all the oil ports with vinyl tape except an advance side port shown in the illustration.

cardiagn.com

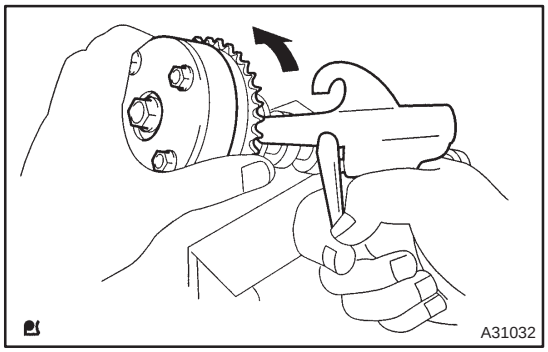


(c) Put air pressure into the oil port with 150 kpa (1.5 kgf/cm$^2$ 21 psi), and turn the camshaft timing gear to the advance direction (counterclockwise) by hand.

**CAUTION:**

**Cover the paths with shop rag to avoid oil splashing.**

HINT:

Depending on the air pressure, the camshaft timing gear will turn to the advance angle side without applying force by hand. Also, under the condition that the pressure can be hardly applied because of the air leakage from the port, there may be the case that the lock pin could be hardly released.

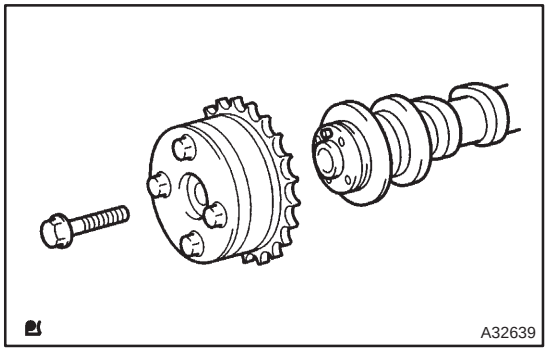


(d) Remove the fringe bolt of camshaft timing gear.

**NOTICE:**

- **Be sure not to remove the other 4 bolts.**
- **If reusing the camshaft timing gear, release the straight pin lock first, and then install the gear.**

**13. INSTALL CAMSHAFT TIMING GEAR OR SPROCKET (LEADED GASOLINE)**
**Torque: 54 N·m (551 kgf·cm, 40 ft·lbf)**

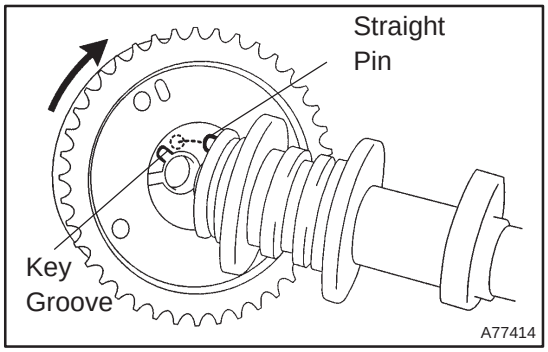


**14. INSTALL CAMSHAFT TIMING GEAR ASSY (UNLEADED GASOLINE)**

(a) Put the camshaft timing gear and the camshaft together with the straight pin off the key groove.

(b) Turn the camshaft timing gear assembly to the left direction (as shown in the illustration) while lightly pushing it toward the camshaft. Push further at the position where the pin gets into the groove.

**NOTICE:**

**Be sure not to turn the camshaft timing gear to the retard angle side (to the right direction).**

(c) Check that there is no clearance between the gear's fringe and the camshaft.

(d) Tighten the fringe bolt with the camshaft timing gear fixed.
**Torque: 54 N·m (551 kgf·cm, 40 ft·lbf)**

(e) Check that the camshaft timing gear can move to the retard angle side (to the right direction), and is locked at the most retarded position.

cardiagn.com

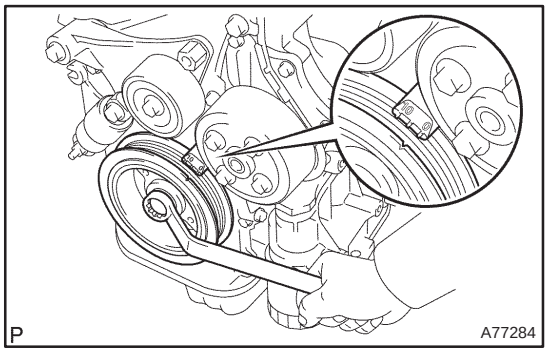


**15. INSTALL CAMSHAFT**

(a) Turn the crankshaft pulley, and align its groove with timing mark 0 of the timing chain cover.

(b) Install the timing chain on the camshaft timing gear, with the painted links aligned with the timing marks on the camshaft timing gear.

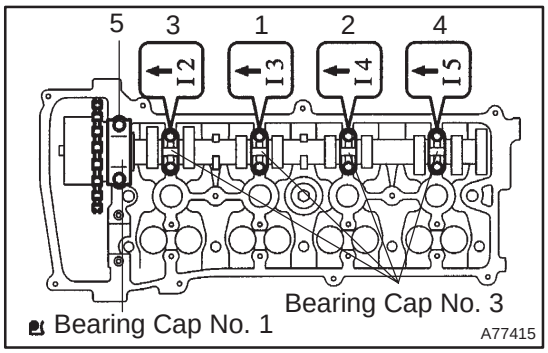


(c) Examine the front marks and numbers and tighten the bolts in the sequence shown in the illustration.
**Torque:**
**Bearing cap No. 1 30 N·m (301 kgf·cm, 22 ft·lbf)**
**Bearing cap No. 3 9.0 N·m (92 kgf·cm, 80 in.·lbf)**

**16. INSTALL NO.2 CAMSHAFT**

(a) Put the No. 2 camshaft on the cylinder head with the painted links of the chain aligned with the timing mark on the camshaft timing gear.

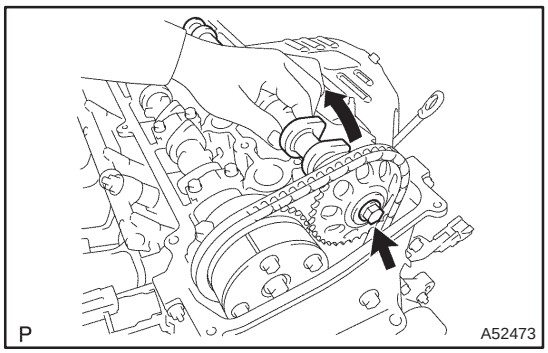


(b) Raising the No. 2 camshaft, tighten the set bolt temporarily.

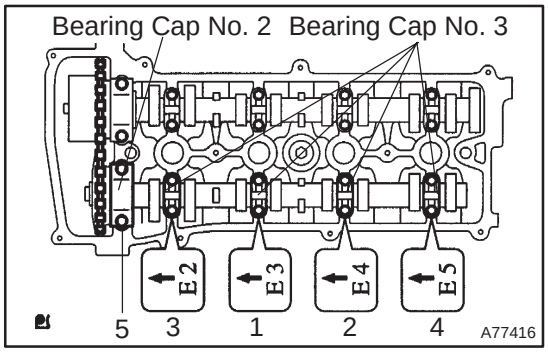


(c) Examine the from marks and numbers and tighten the bolts in the sequence shown in the illustration.
**Torque:**
**Bearing cap No. 2 30 N·m (301 kgf·cm, 22 ft·lbf)**
**Bearing cap No. 3 9.0 N·m (92 kgf·cm, 80 in.·lbf)**

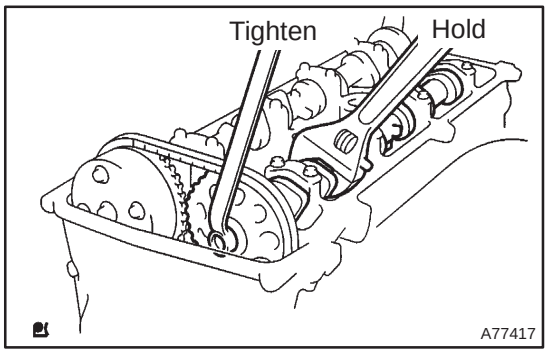


(d) Hold the camshaft with a wrench on the hexagonal lobe, and tighten the camshaft timing gear set bolt.
**Torque: 54 N·m (551 kgf·cm, 40 ft·lbf)**

**NOTICE:**
**Be careful not to damage the cylinder head and valve lifter.**

cardiagn.com

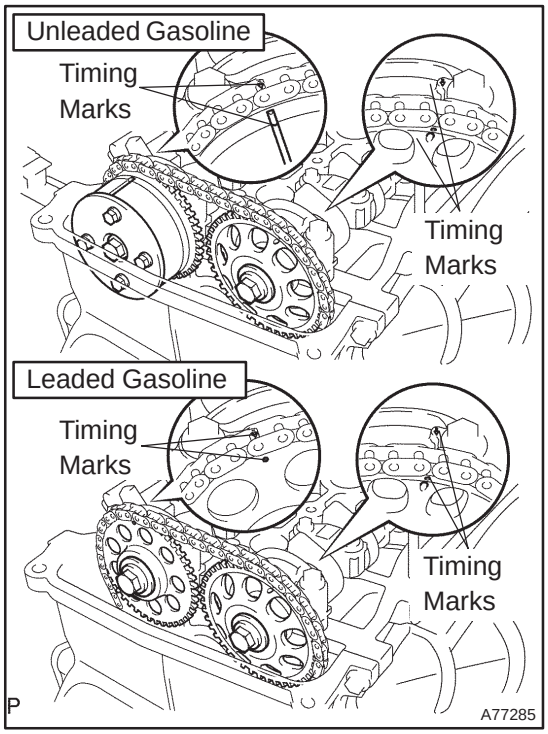


(e) Check that the match marks on the timing chain and the camshaft timing gears are positioned as shown in the illustration.

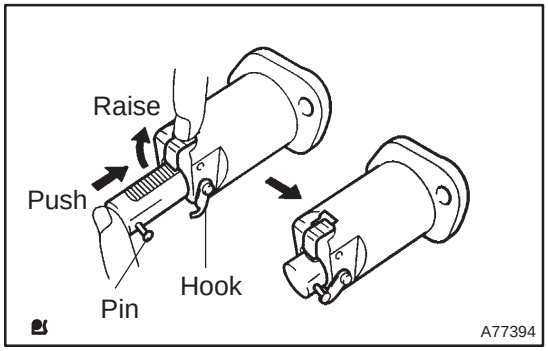


**17. INSTALL CHAIN TENSIONER ASSY NO.1**

(a) Release the ratchet pawl, fully push in the plunger and apply the hook to the pin so that the plunger is locked in position.

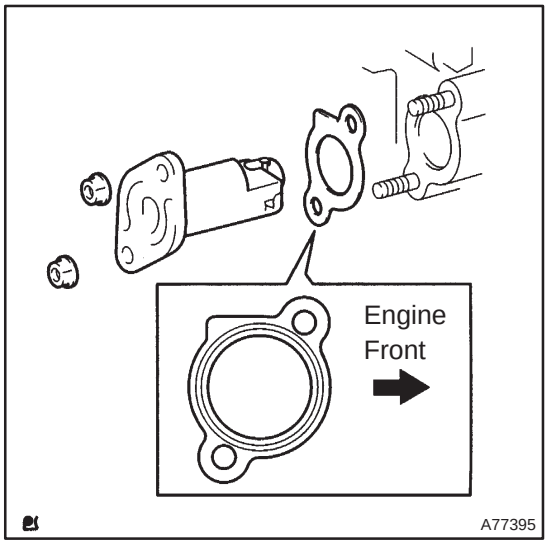


(b) Install a new gasket and the chain tensioner No. 1 with the 2 nuts.

**Torque: 9.0 N·m (92 kgf·cm, 80 in.·lbf)**

**NOTICE:**

**If the hook is disengaged while installing, apply the hook again, and then resume the installation.**

cardiagn.com

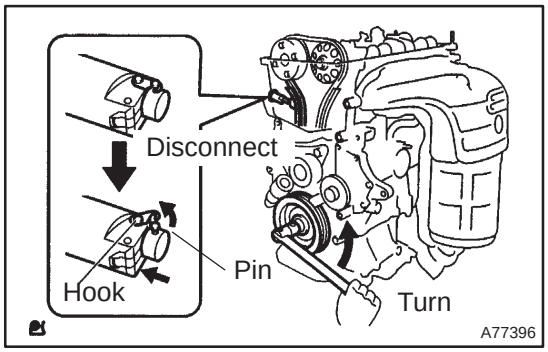


(c) Turn the crankshaft counterclockwise, and check that the pin is disengaged from the hook.

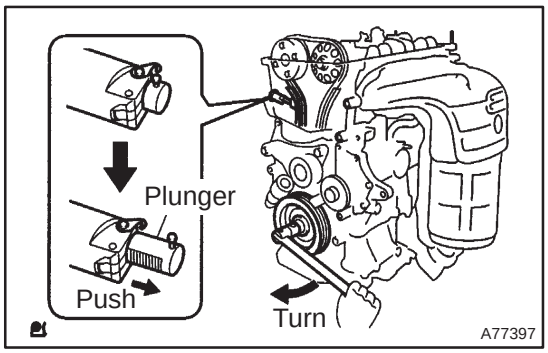


(d) Turn the crankshaft clockwise, and check the plunger is extended.

**18. INSTALL CYLINDER HEAD COVER SUB–ASSY**

(a) Remove any old seal packing (FIPG) material.

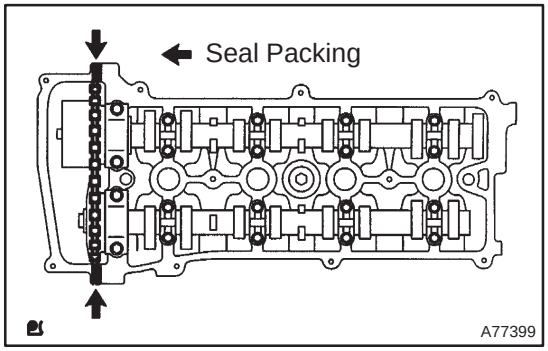


(b) Apply seal packing to the 2 locations as shown in the illustration.

**Seal Packing: Part No. 08826–00080 or equivalent**

**NOTICE:**

- **Remove any oil from the contact surface.**
- **Install the cylinder head cover within 5 minutes after applying seal packing.**
- **Do not expose the seal to engine oil 2 hours after installing.**

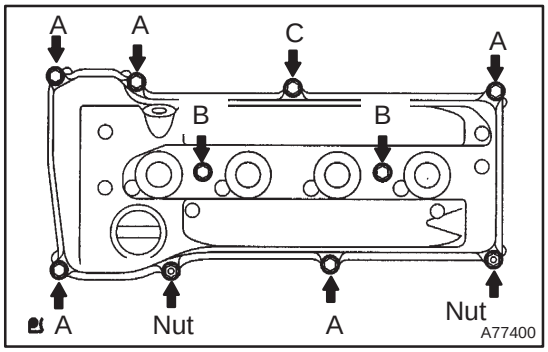


(c) Install the cylinder head cover with the 8 bolts and 2 nuts.

**Torque:**
**Bolt A 11 N·m (112 kgf·cm, 8.0 ft·lbf)**
**Bolt B 14 N·m (143 kgf·cm, 10 ft·lbf)**
**Bolt C 21 N·m (214 kgf·cm, 15 ft·lbf)**
**Nut 11 N·m (112 kgf·cm, 8.0 ft·lbf)**

**19. INSTALL IGNITION COIL ASSY**
**Torque: 9.0 N·m (92 kgf·cm, 80 in.·lbf)**

**20. CHECK FOR ENGINE OIL LEAKS**

**21. INSTALL ENGINE COVER SUB–ASSY NO.1**
**Torque: 7.0 N·m (71 kgf·cm, 62 in.·lbf)**

cardiagn.com

# CAMSHAFT (1AZ–FSE)

## COMPONENTS

141BP–01

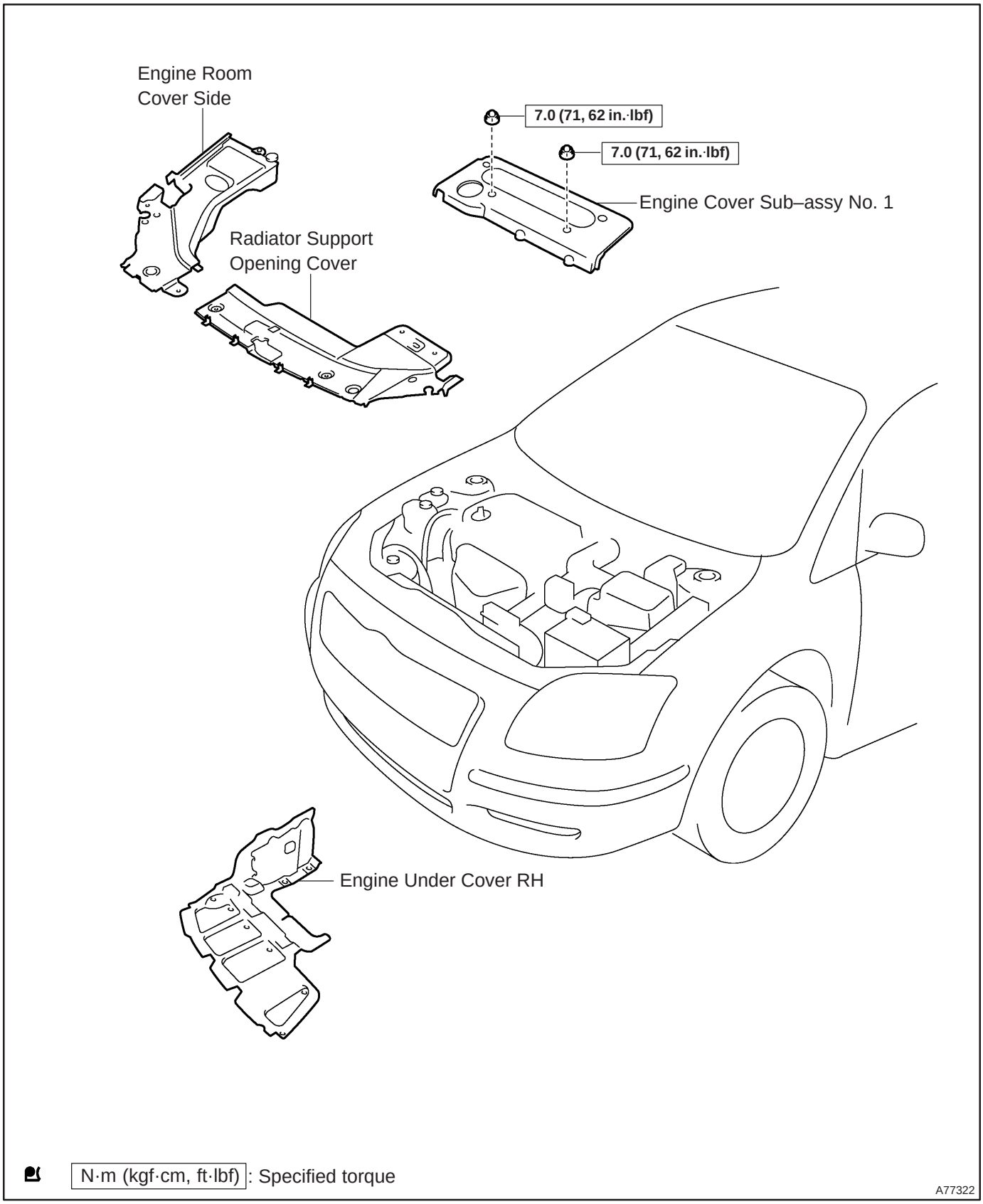


cardiagn.com

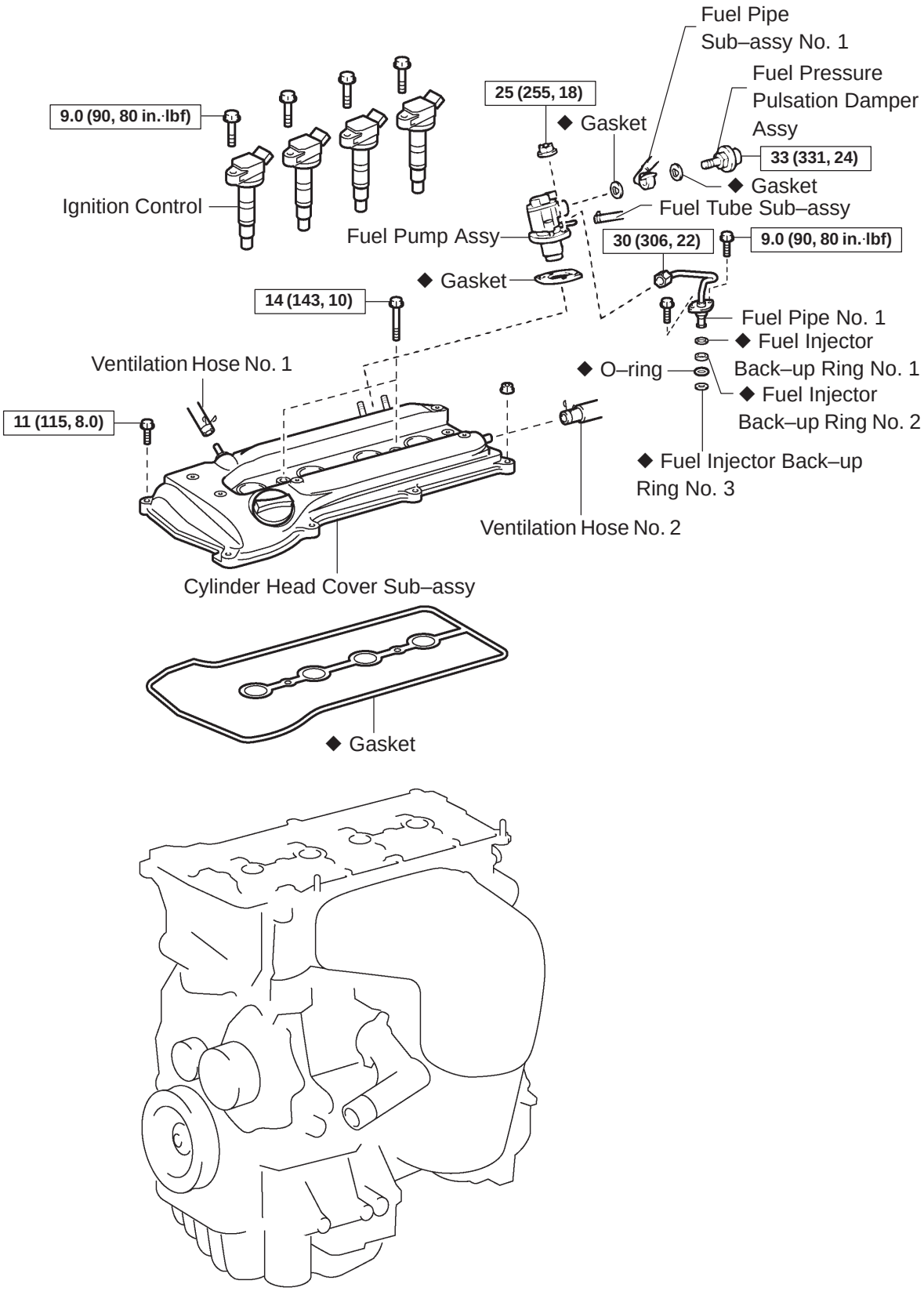


N·m (kgf·cm, ft·lbf) : Specified torque

◆ Non–reusable part

A77374

cardiagn.com

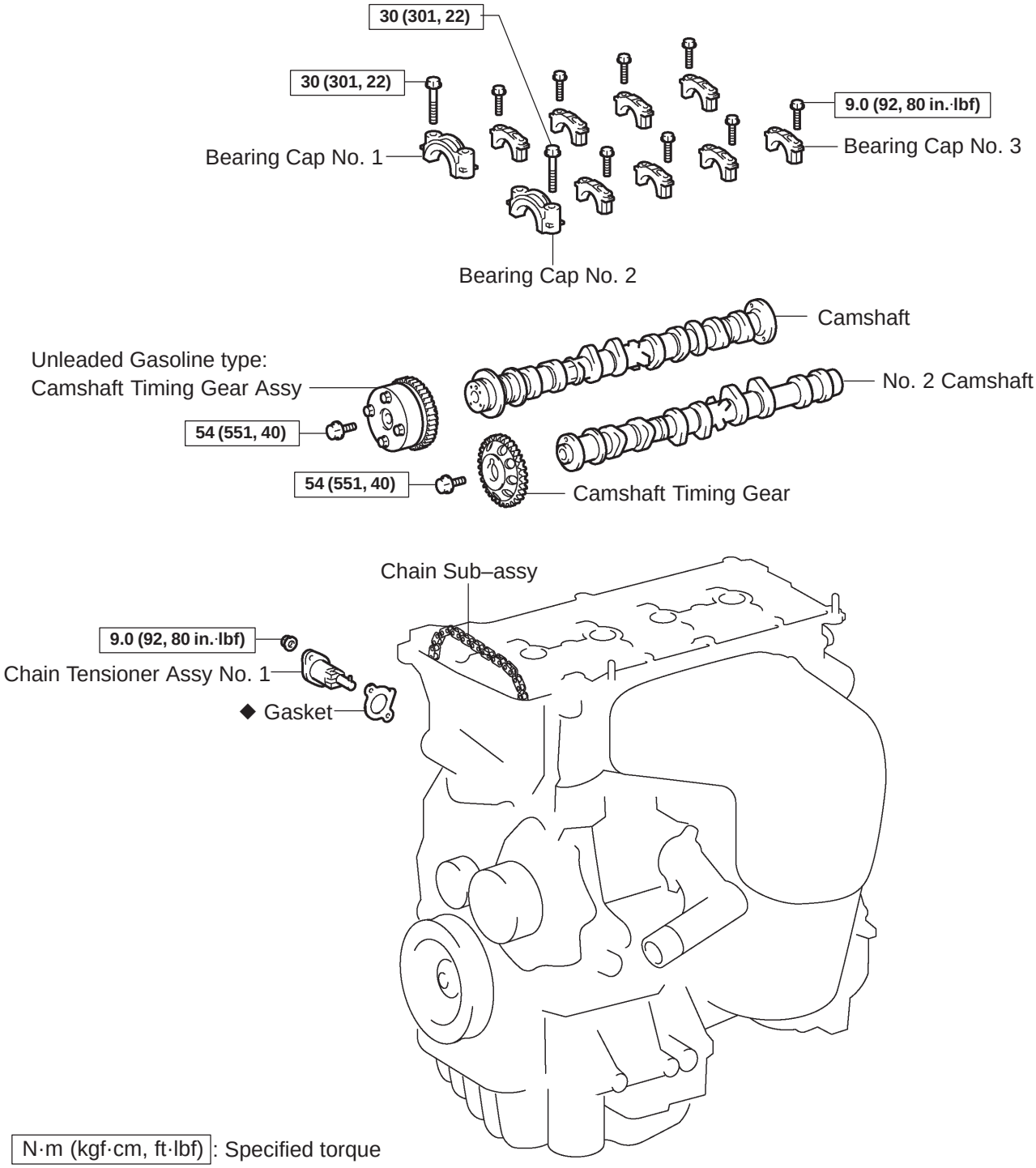


N·m (kgf·cm, ft·lbf): Specified torque

◆ Non–reusable part

A79802



cardiagn.com

141BQ–01

# REPLACEMENT

1. **DISCHARGE FUEL SYSTEM PRESSURE (See page 11–30)**
2. **REMOVE RADIATOR SUPPORT OPENING COVER**
3. **REMOVE ENGINE ROOM COVER SIDE**
4. **REMOVE ENGINE UNDER COVER RH**

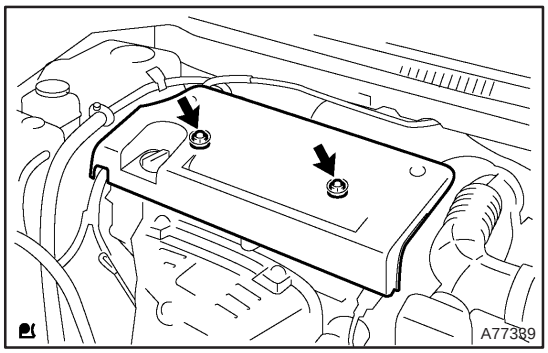


5. **REMOVE ENGINE COVER SUB–ASSY NO.1**

(a) Remove the 2 nuts and the engine cover No. 1.

6. **REMOVE IGNITION COIL ASSY**

(a) Remove the 4 bolts and the ignition coils.

7. **REMOVE FUEL PRESSURE PULSATION DAMPER ASSY**
8. **REMOVE FUEL TUBE SUB–ASSY (See page 11–33)**
9. **REMOVE FUEL PIPE SUB–ASSY NO.1 (See page 11–52)**

   SST 09023–12900
10. **REMOVE FUEL PUMP ASSY (See page 11–52)**
11. **REMOVE CYLINDER HEAD COVER SUB–ASSY (See page 14–222)**

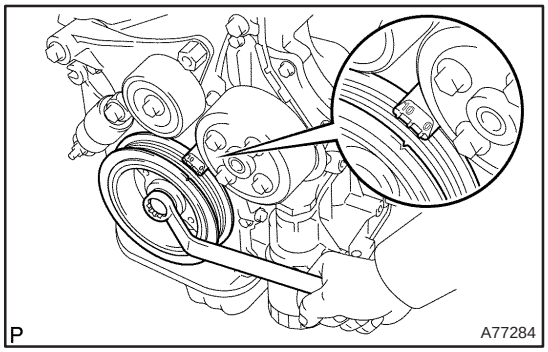


12. **SET NO. 1 CYLINDER TO TDC/COMPRESSION**

(a) Turn the crankshaft pulley, and align its groove with timing mark 0 of the timing chain cover.

cardiagn.com

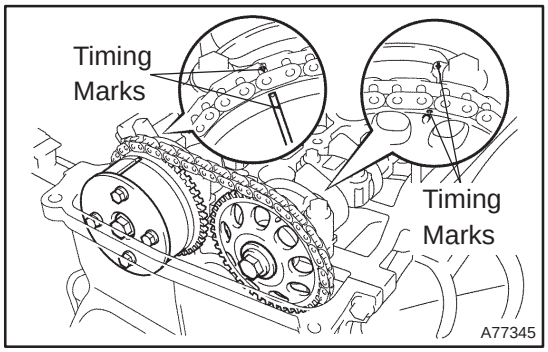


(b) Check that each timing mark of the camshaft timing gears is aligned with each timing mark located on the No. 1 and No. 2 bearing caps as shown in the illustration.

If not, turn the crankshaft 1 revolution (360°) and align the marks as above.

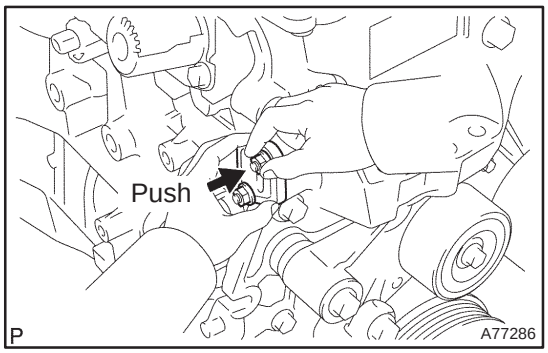


**13. REMOVE CHAIN TENSIONER ASSY NO.1**

(a) Remove the 2 nuts, the chain tensioner and a gasket.

**NOTICE:**

**Do not turn the crankshaft.**

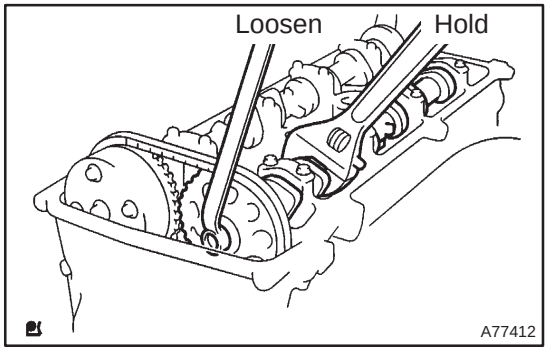


**14. REMOVE NO.2 CAMSHAFT**

(a) Hold the No. 2 camshaft with a wrench on the hexagonal lobe, and loosen the camshaft timing gear set bolt.

**NOTICE:**

**Be careful not to damage the cylinder head and valve lifter with the wrench.**

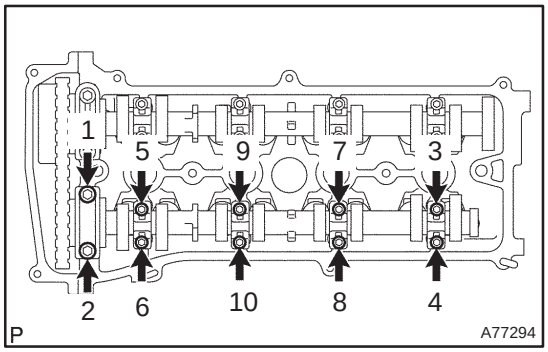


(b) Using several steps, loosen and remove the 10 camshaft bearing cap bolts uniformly in the sequence shown in the illustration.

(c) Remove the 5 camshaft bearing caps.

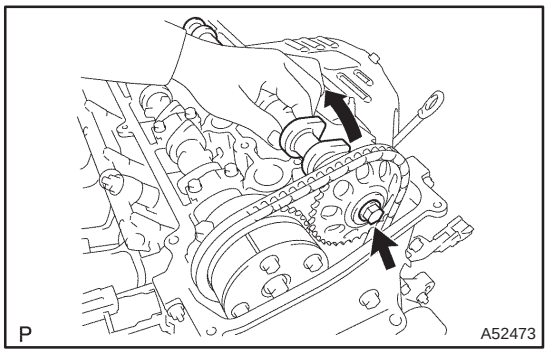


(d) Raising the No. 2 camshaft, remove the set bolt.

(e) Remove the camshaft timing gear from the No. 2 camshaft with with the timing chain wrapped.

(f) Remove the camshaft timing gear from the timing chain.

cardiagn.com

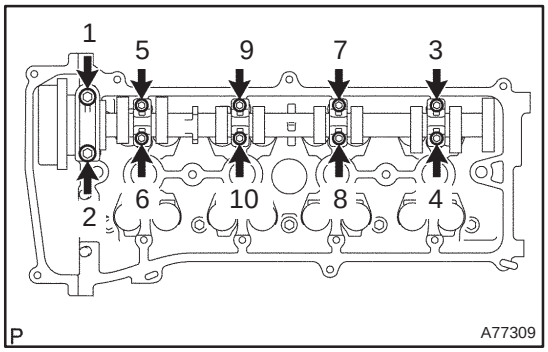


**15. REMOVE CAMSHAFT**

(a) Using several steps, loosen and remove the 10 camshaft bearing cap bolts uniformly in the sequence shown in the illustration.

(b) Remove 5 camshaft bearings.

(c) Remove the camshaft.

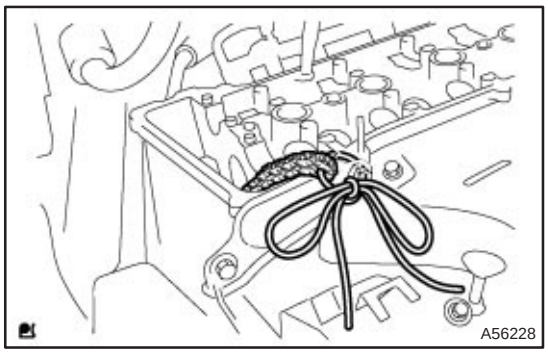


(d) Tie the timing chain as shown in the illustration.

**NOTICE:**

- **Be careful not to drop anything inside the timing chain cover.**
- **Do not expose the chain to water, and prevents dust.**

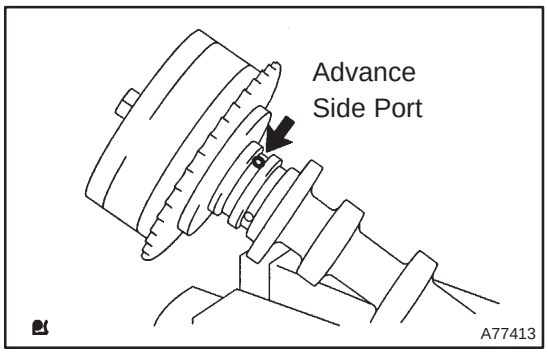


**16. REMOVE CAMSHAFT TIMING GEAR ASSY**

(a) Clamp the camshaft in a vise, and make sure the camshaft timing gear does not rotate.

(b) Cover all the oil ports with vinyl tape except an advance side port shown in the illustration.

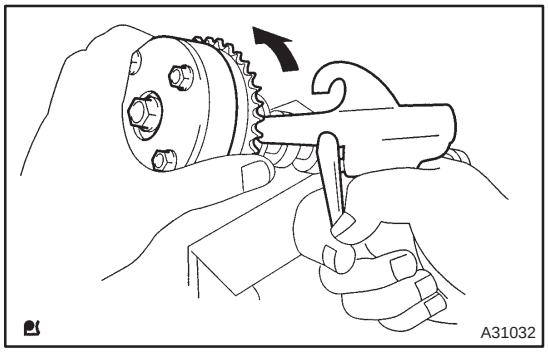


(c) Put air pressure into the oil port with 150 kpa (1.5 kgf/cm$^2$ 21 psi), and turn the camshaft timing gear to the advance direction (counterclockwise) by hand.

**CAUTION:**

**Cover the ports with shop rag to avoid oil splashing.**

HINT:

Depending on the air pressure, the camshaft timing gear will turn to the advance angle side without applying force by hand. Also, under the condition that the pressure can be hardly applied because of the air leakage from the port, there may be the case that the lock pin could be hardly released.

cardiagn.com

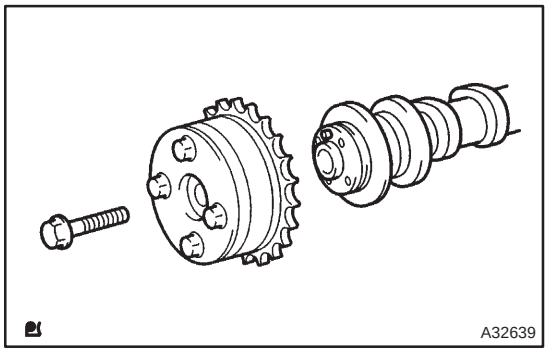


(d) Remove a fringe bolt of camshaft timing gear.

**NOTICE:**

- **Be sure not to remove the other 4 bolts.**
- **If reusing the camshaft timing gear, release the straight pin lock first, and then install the gear.**

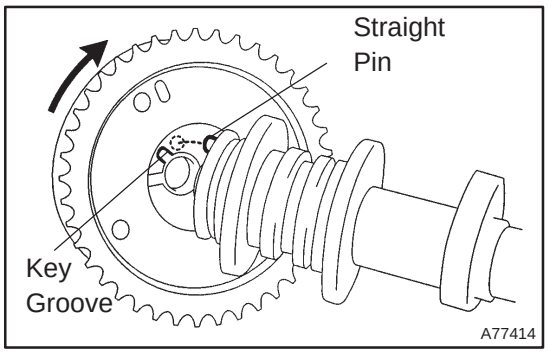


**17. INSTALL CAMSHAFT TIMING GEAR ASSY**

(a) Put the camshaft timing gear and the camshaft together with the straight pin off the key groove.

(b) Turn the camshaft timing gear assembly to the left direction (as shown in the illustration) while lightly pushing it toward the camshaft. Push further at the position where the pin gets into the groove.

**NOTICE:**

**Be sure not to turn the camshaft timing gear to the retard angle side (to the right direction).**

(c) Check that there is no clearance between the gear's fringe and the camshaft.

(d) Tighten the fringe bolt with the camshaft timing gear fixed.
**Torque: 54 N·m (551 kgf·cm, 40 ft·lbf)**

(e) Check that the camshaft timing gear can move to the retard angle side (to the right direction), and is locked at the most retarded position.

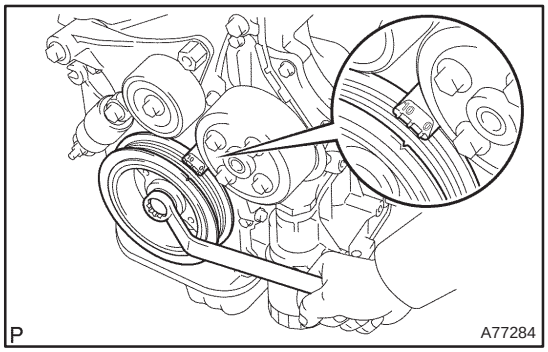


**18. INSTALL CAMSHAFT**

(a) Turn the crankshaft pulley, and align its groove with timing mark 0 of the timing chain cover.

(b) Install the timing chain on the camshaft timing gear, with the painted links aligned with the timing marks on the camshaft timing gear.

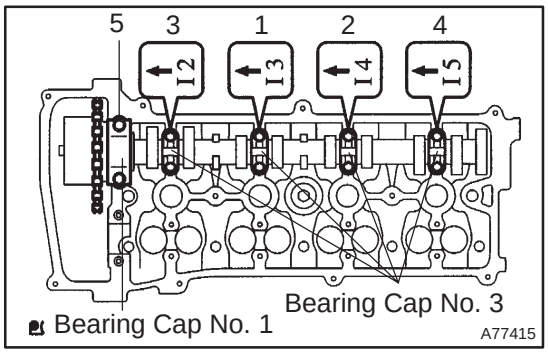


(c) Examine the front marks and numbers and tighten the bolts in the order shown in the illustration.
**Torque:**
**Bearing cap No. 1 30 N·m (301 kgf·cm, 22 ft·lbf)**
**Bearing cap No. 3 9.0 N·m (92 kgf·cm, 80 in.·lbf)**

**19. INSTALL NO.2 CAMSHAFT**

(a) Put the No. 2 camshaft on the cylinder head with the painted links of chain aligned with the timing mark on the camshaft timing gear.

cardiagn.com

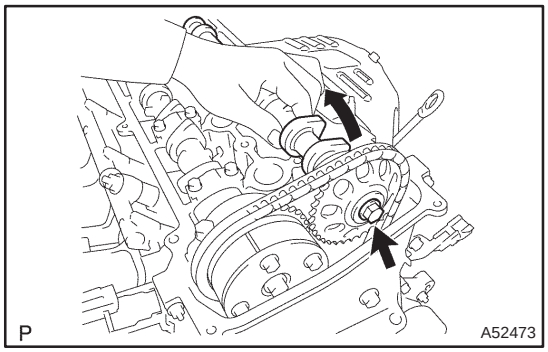


(b) Raising the No. 2 camshaft, tighten the set bolt temporarily.

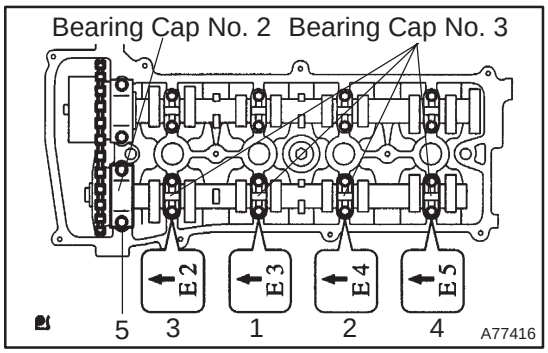


(c) Examine the from marks and numbers and tighten the bolts in the sequence shown in the illustration.
**Torque:**
**Bearing cap No. 2 30 N·m (301 kgf·cm, 22 ft·lbf)**
**Bearing cap No. 3 9.0 N·m (92 kgf·cm, 80 in.·lbf)**

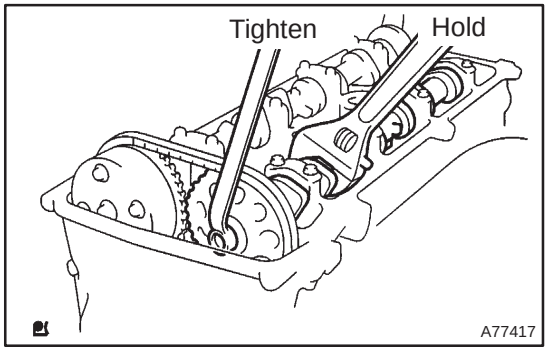


(d) Hold the camshaft with a wrench on the hexagonal lobe, and tighten the camshaft timing gear set bolt.
**Torque: 54 N·m (551 kgf·cm, 40 ft·lbf)**

**NOTICE:**
**Be careful not to damage the cylinder head and valve lifter.**

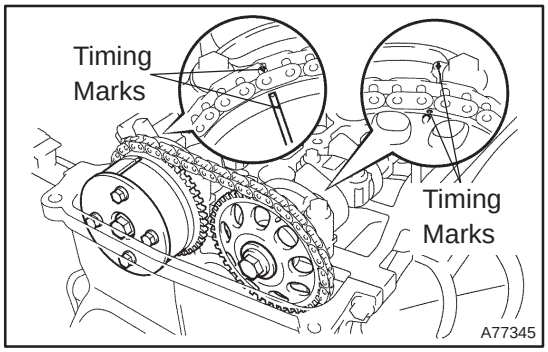


(e) Check that the match marks on the timing chain and the camshaft timing gears are positioned as shown in the illustration

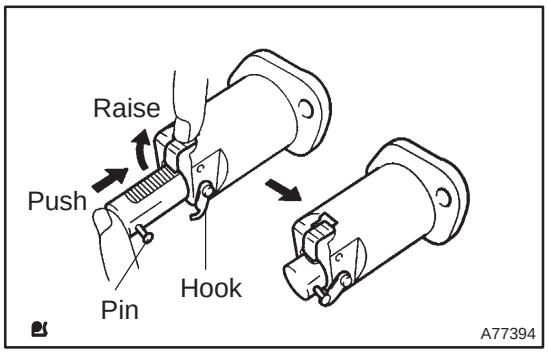


**20. INSTALL CHAIN TENSIONER ASSY NO.1**

(a) Release the ratchet pawl, fully push in the plunger and apply the hook to the pin so that the plunger is locked in position.

cardiagn.com

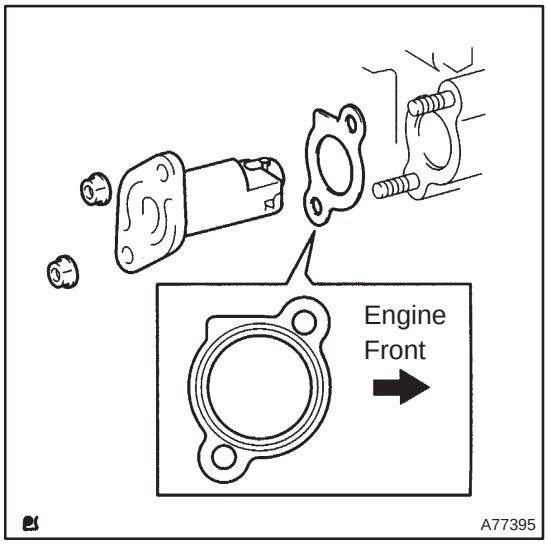


(b) Install a new gasket chain tensioner No. 1 with 2 nuts.
**Torque: 9.0 N·m (92 kgf·cm, 80 in.·lbf)**

**NOTICE:**
**If the hook is disengaged while installing, apply the hook again, and then resume the installation.**

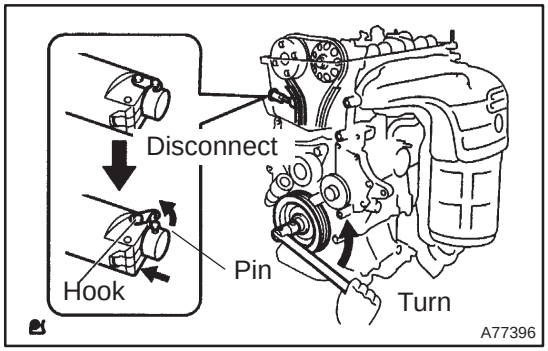


(c) Turn the crankshaft counterclockwise, and check that the pin is disengaged from the hook.

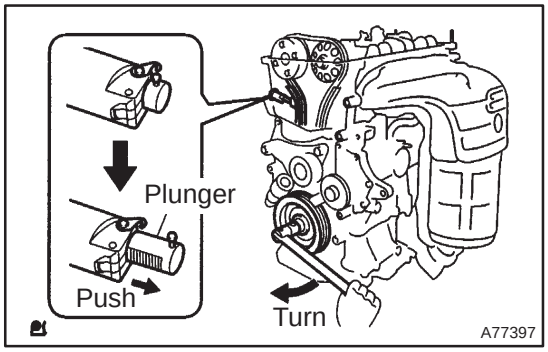


(d) Turn the crankshaft clockwise, and check the plunger is extended.

**21. INSTALL CYLINDER HEAD COVER SUB–ASSY (See page 14–222)**
**22. INSTALL FUEL PUMP ASSY (See page 11–52)**
**23. INSTALL FUEL PIPE SUB–ASSY NO.1 (See page 11–52)**
SST 09023–12900
**24. INSTALL FUEL TUBE SUB–ASSY (See page 11–30)**
**25. INSTALL FUEL PRESSURE PULSATION DAMPER ASSY (See page 11–52)**
**26. INSTALL IGNITION COIL ASSY**
**Torque: 9.0 N·m (92 kgf·cm, 80 in.·lbf)**
**27. CHECK FOR ENGINE OIL LEAKS**
**28. INSTALL ENGINE COVER SUB–ASSY NO.1**
**Torque: 7.0 N·m (71 kgf·cm, 62 in.·lbf)**

cardiagn.com

# CAMSHAFT (1CD–FTV)

## COMPONENTS

141C7–01

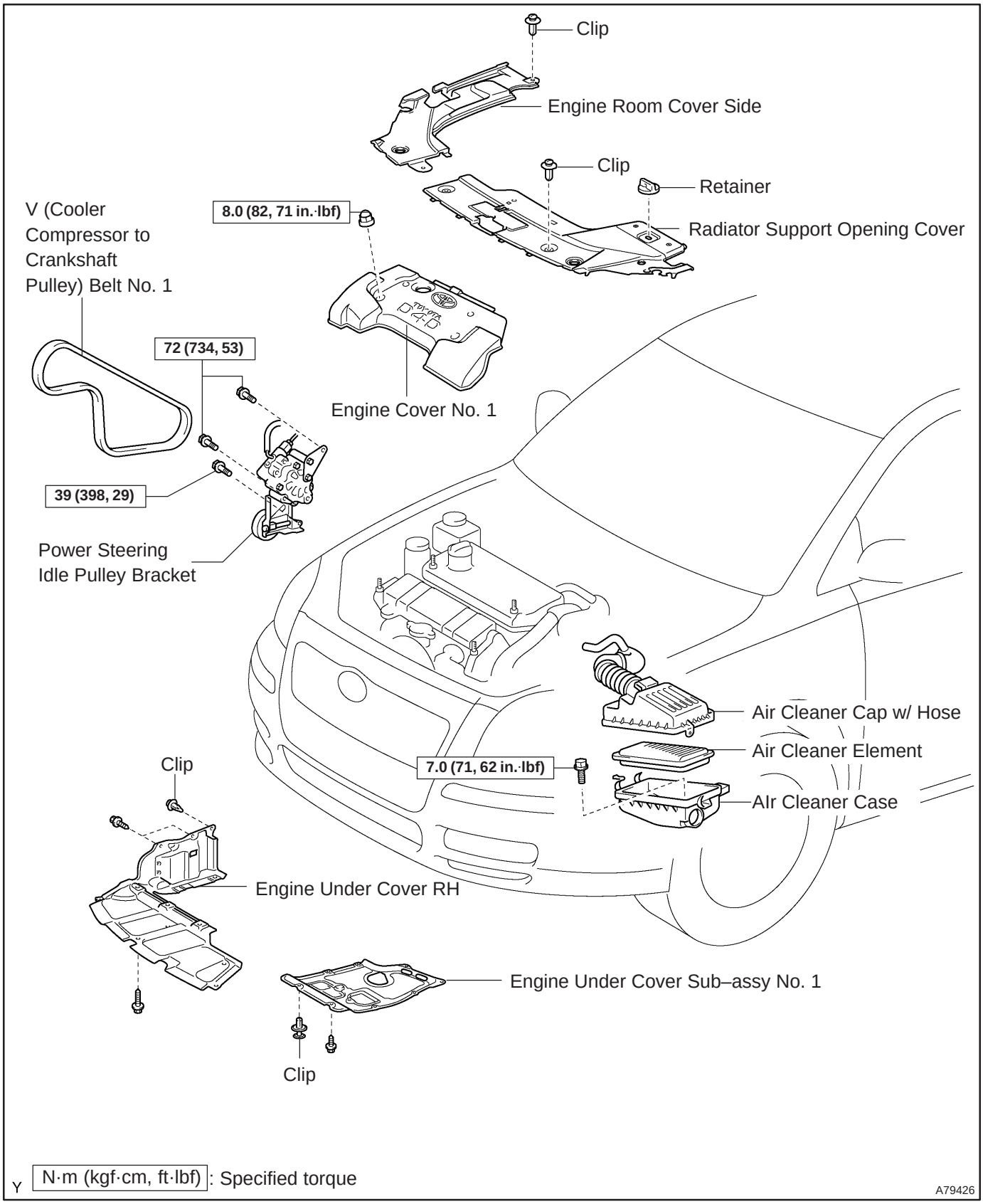


cardiagn.com

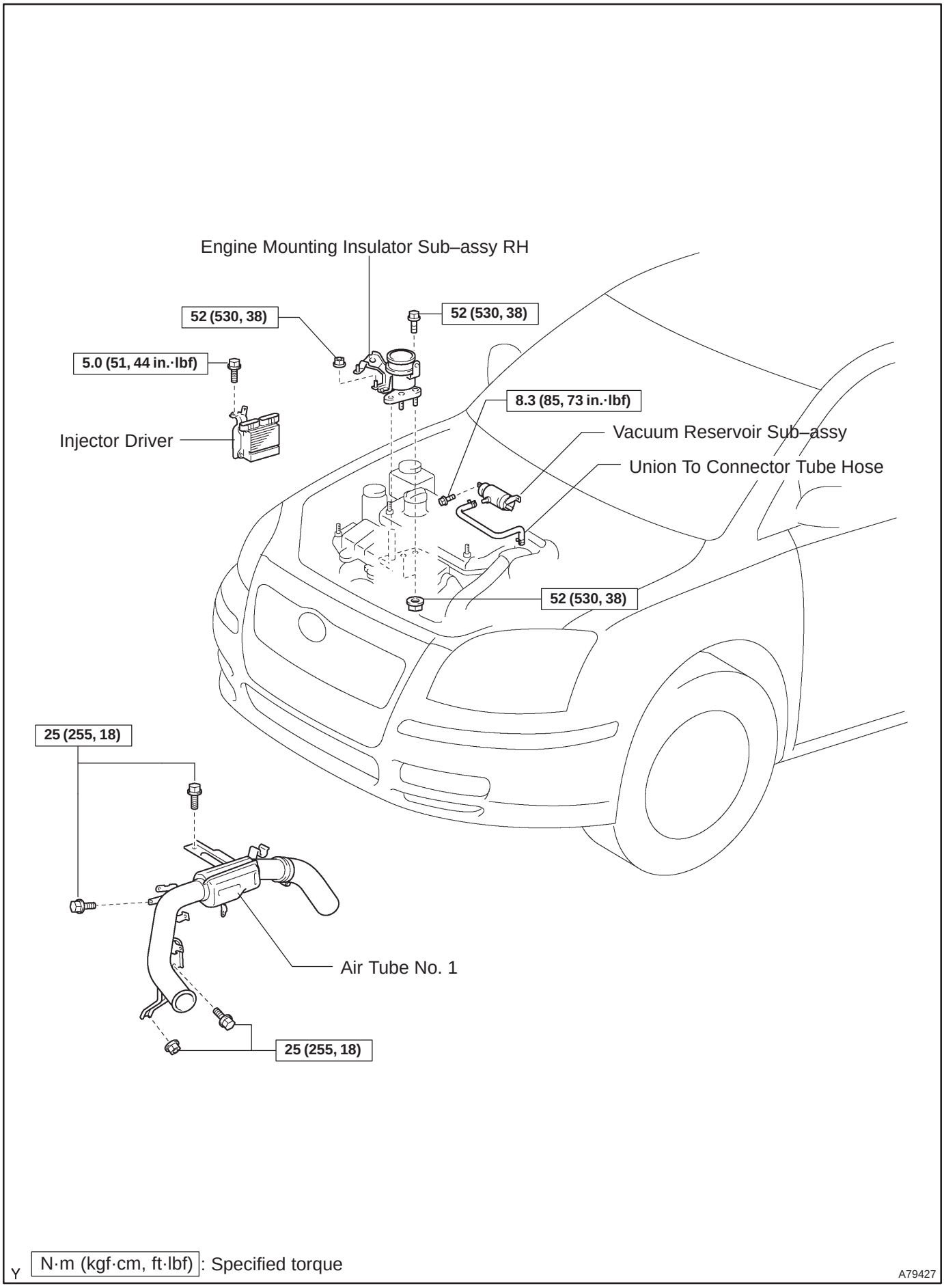


cardiagn.com

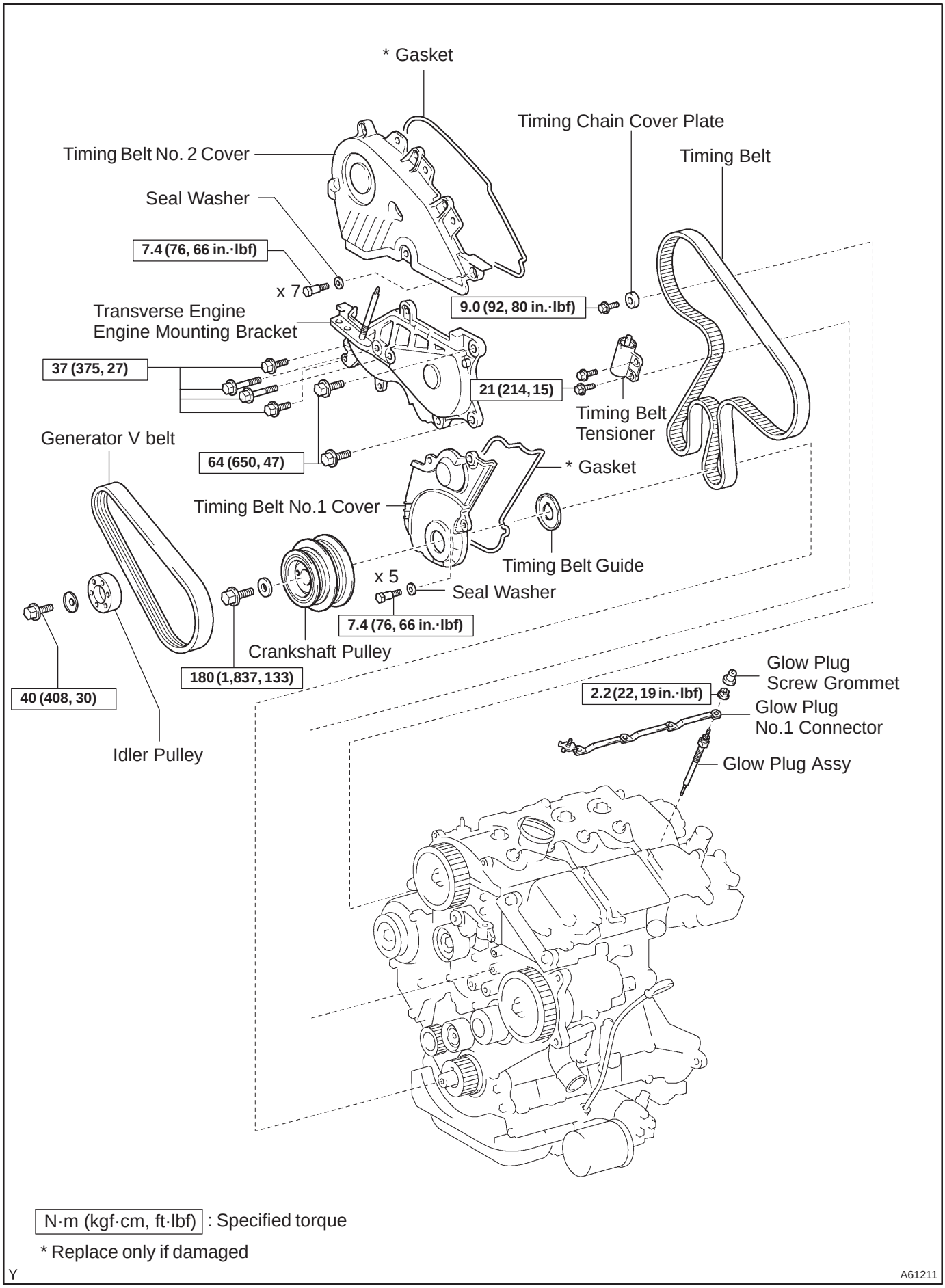


cardiagn.com

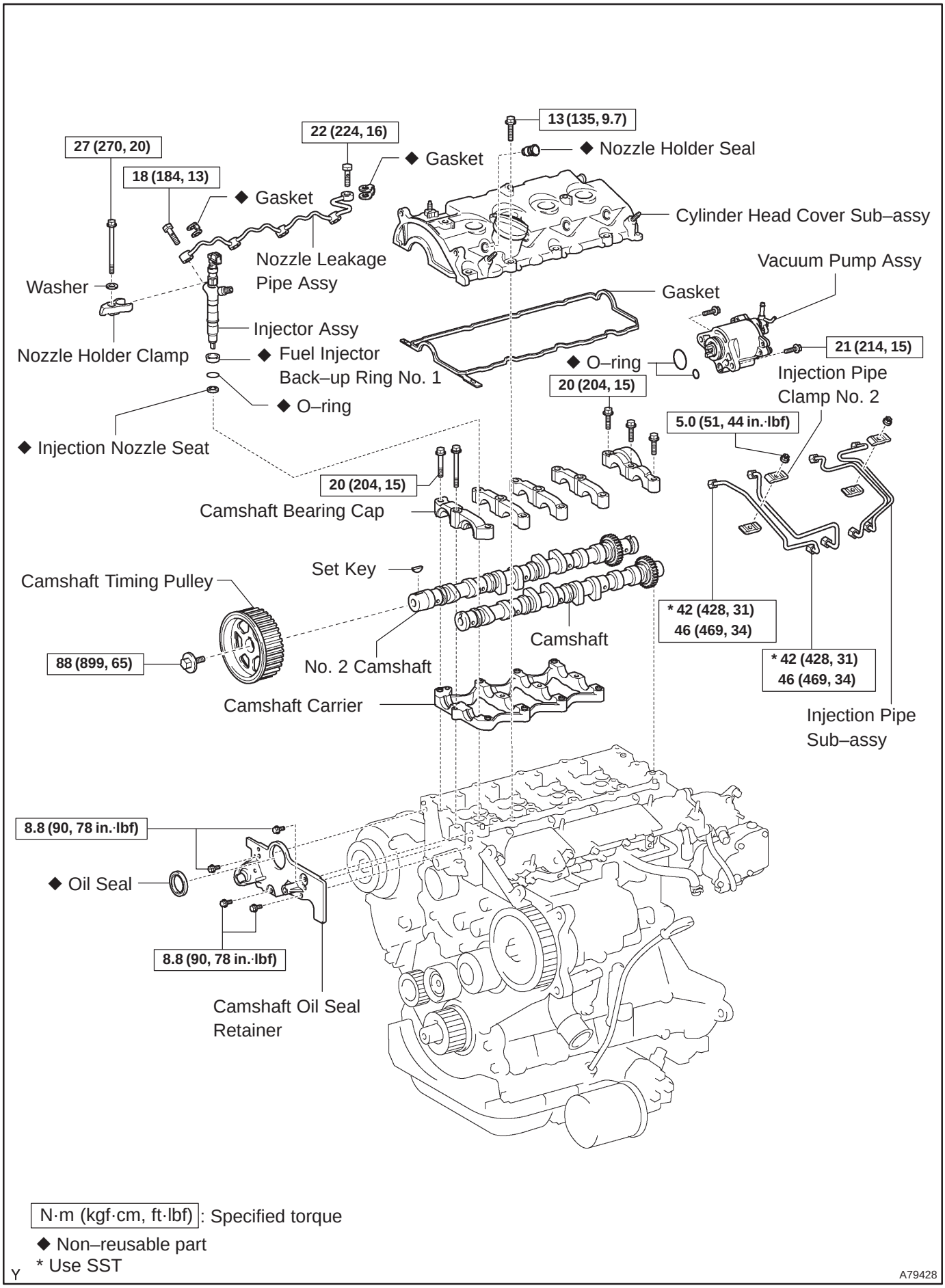


cardiagn.com

141C8–01

# REPLACEMENT

**1. REMOVE FRONT WHEEL RH**
**2. REMOVE ENGINE UNDER COVER SUB–ASSY NO.1**
**3. ENGINE UNDER COVER RH**
**4. REMOVE RADIATOR SUPPORT OPENING COVER**
**5. REMOVE ENGINE ROOM COVER SIDE**
**6. REMOVE ENGINE COVER NO.1**
(a) Remove the 5 nuts and the engine cover.
**7. REMOVE AIR CLEANER ASSY (See page 11–60)**
**8. REMOVE VACUUM RESERVOIR SUB–ASSY**
(a) Disconnect the 2 vacuum hoses and the connector.
(b) Remove the 2 bolts and the vacuum reservoir.
**9. REMOVE AIR TUBE NO.1 (See page 14–270)**
**10. REMOVE INJECTOR DRIVER (See page 14–286)**
**11. REMOVE V (COOLER COMPRESSOR TO CRANKSHAFT PULLEY) BELT NO.1 (See page 14–269)**
**12. REMOVE GENERATOR V BELT (See page 14–269)**
**13. SEPARATE POWER STEERING IDLE PULLEY BRACKET (See page 14–286)**
**14. REMOVE ENGINE MOUNTING INSULATOR SUB–ASSY RH (See page 14–307)**
**15. REMOVE CRANKSHAFT PULLEY (See page 14–307)**
SST 09213–54015 (90105–08076), 09330–00021, 09950–50013 (09951–05010, 09952–05010, 09953–05020, 09954–05031)
**16. REMOVE IDLER PULLEY SUB–ASSY (See page 14–307)**
**17. REMOVE TIMING BELT NO.2 COVER (See page 14–307)**
**18. REMOVE TIMING BELT NO.1 COVER (See page 14–307)**
**19. REMOVE TIMING BELT GUIDE**
**20. REMOVE TRANSVERSE ENGINE ENGINE MOUNTING BRACKET (See page 14–307)**
**21. SET NO. 1 CYLINDER TO TDC/COMPRESSION (See page 14–307)**
**22. REMOVE TIMING CHAIN COVER PLATE (See page 14–307)**
**23. REMOVE TIMING BELT (See page 14–307)**
**24. REMOVE CAMSHAFT POSITION SENSOR (See page 10–63)**

cardiagn.com

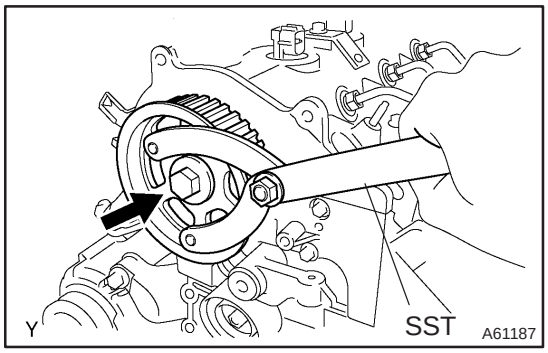


**25. REMOVE CAMSHAFT TIMING PULLEY**
(a) Using SST, remove the pulley bolt.
SST 09960–10010 (09962–01000, 09963–01000)
(b) Remove the timing pulley.
HINT:
Using a plastic–faced hammer, tap out the pulley.
(c) Remove the set key.

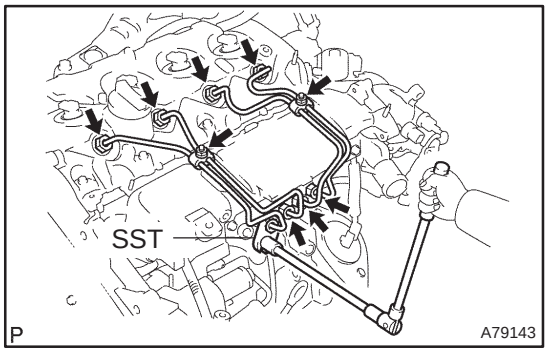


**26. REMOVE INJECTION PIPE SUB–ASSY NO.1 (See page 11–60)**

(a) Remove the 2 nuts and 2 upper infection pipe clamps from the intake manifold.

(b) Using SST, remove the injection pipe from the common rail side.
SST 09023–12700

(c) Using SST, remove the injection pipe from the injector side.
SST 09023–12700

(d) After removing the fuel pipe, to prevent dust or foreign objects from being introduced, cover the common rail with vinyl tape and protect the injector inlet with a vinyl or a plastic bag.

**27. REMOVE INJECTION PIPE SUB–ASSY NO.2 (See page 11–60)**
SST 09023–12700

HINT:
Perform the same procedures as injection pipe No. 1.

**28. REMOVE INJECTION PIPE SUB–ASSY NO.3 (See page 11–60)**
SST 09023–12700

HINT:
Perform the same procedures as injection pipe No. 1.

**29. REMOVE INJECTION PIPE SUB–ASSY NO.4 (See page 11–60)**
SST 09023–12700

HINT:
Perform the same procedures as injection pipe No. 1.

**30. REMOVE VACUUM PUMP ASSY**

(a) Remove vacuum hose.

(b) Remove vacuum pump oil hose.

(c) Remove the 2 bolts and the vacuum pump assembly.

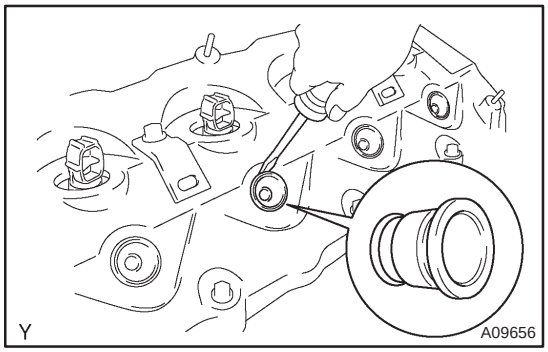


**31. REMOVE NOZZLE HOLDER SEAL**

(a) Using a screwdriver, pry out the 4 nozzle holder seals.

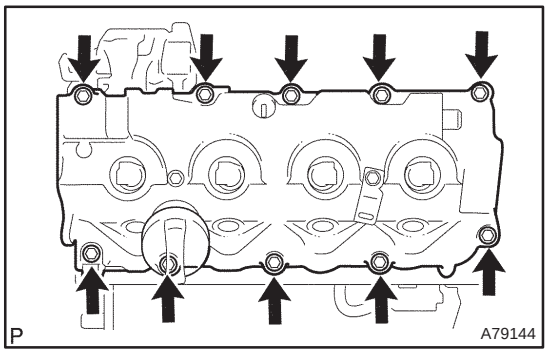


**32. REMOVE CYLINDER HEAD COVER SUB–ASSY**

(a) Remove the 10 bolts, the cylinder head cover and the gasket.



cardiagn.com

**33. REMOVE NOZZLE LEAKAGE PIPE ASSY (See page 11–60)**

**34. REMOVE INJECTOR ASSY (See page 11–60)**

HINT:

Since each injector assembly has a characteristic fuel injecting behavior, store them in correct order so that they can be returned to the original locations when re–assembling.

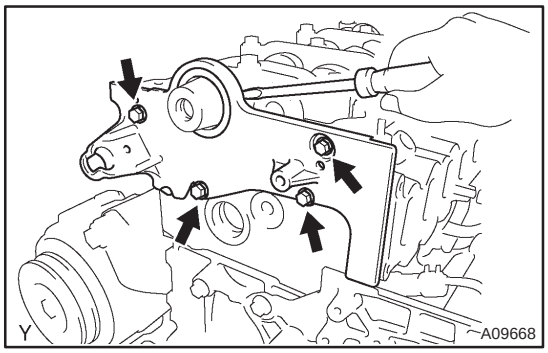


**35. REMOVE CAMSHAFT OIL SEAL RETAINER**

(a) Remove the 4 bolts.

(b) Using a screwdriver, remove the oil seal retainer by prying between the oil seal retainer and the camshaft bearing cap.

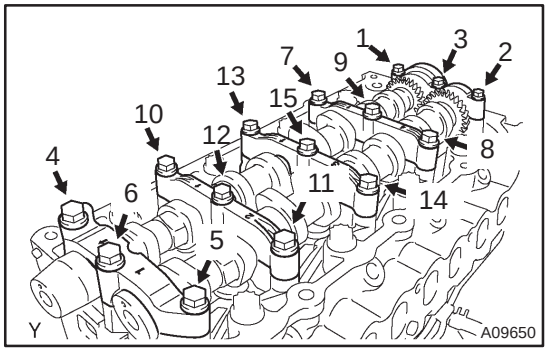


**36. REMOVE CAMSHAFT**

(a) Using several steps, loosen and remove the 15 bearing cap bolts uniformly in the sequence shown in the illustration.

(b) Remove the 5 bearing caps and the camshaft sub–assy.

**37. REMOVE NO.2 CAMSHAFT**

(a) Remove the camshaft sub–assy and the camshaft carrier.

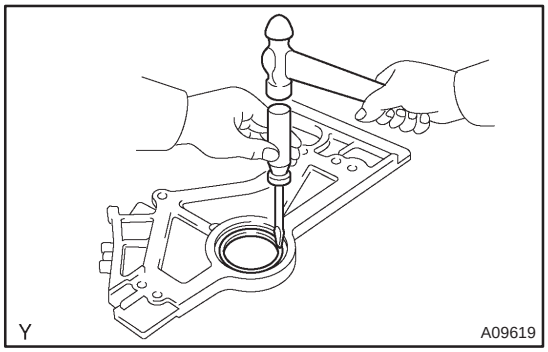


**38. REMOVE CAMSHAFT OIL SEAL**

(a) Using a screwdriver and a hammer, tap out the oil seal.

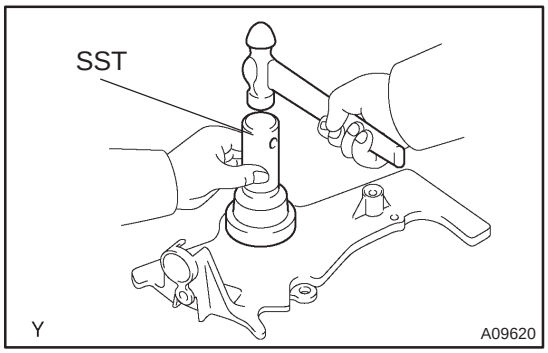


**39. INSTALL CAMSHAFT OIL SEAL**

(a) Using SST and a hammer, tap in a new oil seal until its surface is flush with the camshaft oil seal retainer edge.

SST 09223–46011

cardiagn.com

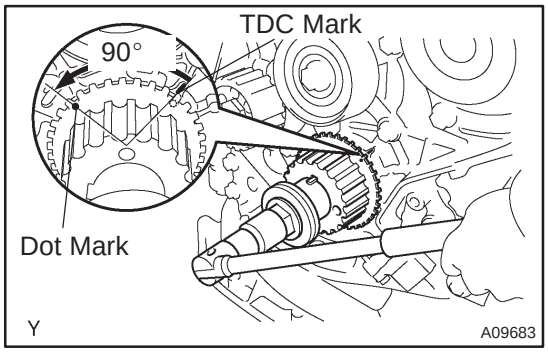


**40. SET NO. 1 CYLINDER TO TDC/COMPRESSION**

(a) Using the crankshaft pulley bolt, turn the crankshaft to set the dot mark of the crankshaft timing pulley at the position of 90° BTDC.

**NOTICE:**

**If the timing belt is disengaged, having the crankshaft timing pulley at wrong angle can cause the piston head and valve head to come into contact with each other.**

**41. INSTALL CAMSHAFT**

**NOTICE:**

**Since the thrust clearance of the camshaft is small, the camshaft must be kept level while it is being installed. If the camshaft is not kept level, damage to the cylinder head or the camshaft may result. To avoid this, the following procedures should be carried out.**

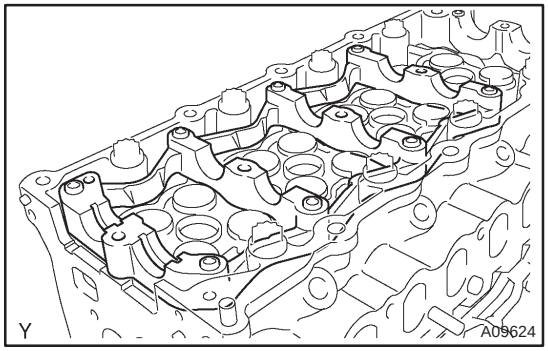


(a) Place the camshaft carrier on the cylinder head.

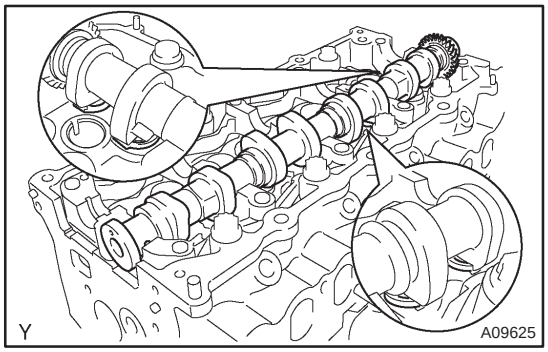


(b) Install the camshaft sub–assy No. 1.

(c) Apply engine oil to the cam and gear of the camshaft, and the journal of the camshaft carrier.

(d) Place the intake camshaft on the camshaft carrier as shown in the illustration so that the No. 3 and No. 4 of cylinder cam lobes face downward.

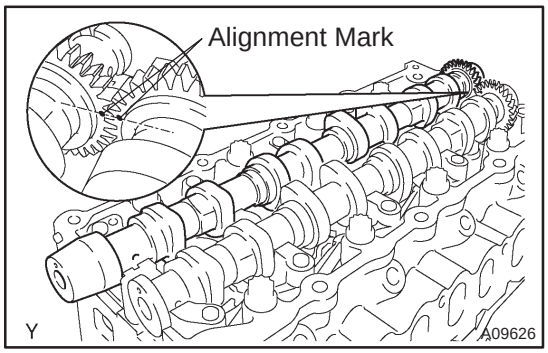


**42. INSTALL NO.2 CAMSHAFT**

(a) Install the camshaft sub–assy No. 2.

(b) Apply engine oil to the cam and gear of the camshaft, and the journal of the camshaft carrier.

(c) Engage the exhaust camshaft gear and the intake camshaft gear by aligning the alignment marks on each gear.

(d) Roll down the exhaust camshaft onto the bearing journals while engaging gears with each other.

cardiagn.com

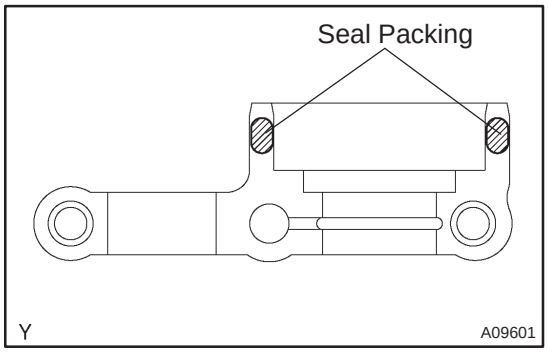


(e) Install the camshaft bearing caps.
(1) Remove any oil packing (FIPG) material from the No. 5 camshaft bearing cap.
(2) Apply seal packing to the No. 5 camshaft bearing cap as shown in the illustration.
**Seal packing: Part No. 08826–00080 or equivalent**

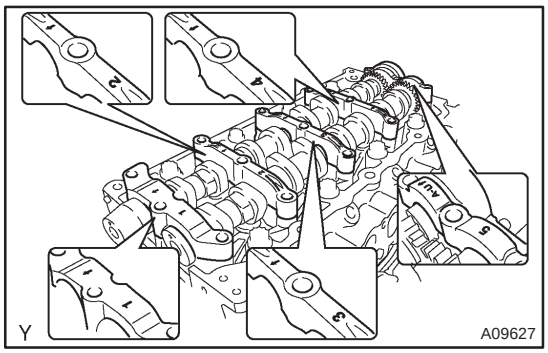


(3) Place the 5 bearing caps in their proper locations.

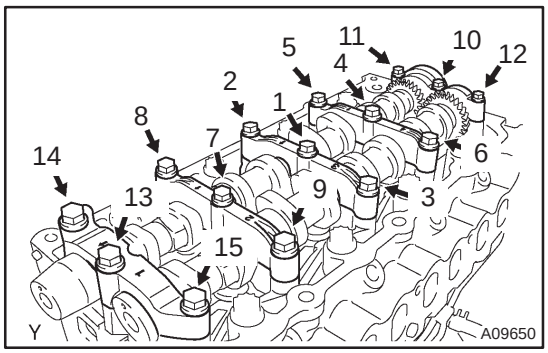


(4) Using several steps, install and tighten the 15 bearing cap bolts uniformly in the sequence shown in the illustration.
**Torque: 20 N·m (204 kgf·cm, 15 ft·lbf)**

**43. INSPECT VALVE CLEARANCE (See page 14–270)**
**44. ADJUST VALVE CLEARANCE (See page 14–270)**

**45. INSTALL CAMSHAFT OIL SEAL RETAINER**

(a) Remove any old packing (FIPG) material and be careful not to drop any oil on the contact surfaces of the oil seal retainer and the cylinder block.
(1) Thoroughly clean all components to remove all the loose material.
(2) Using non–residue solvent, clean both sealing surfaces.

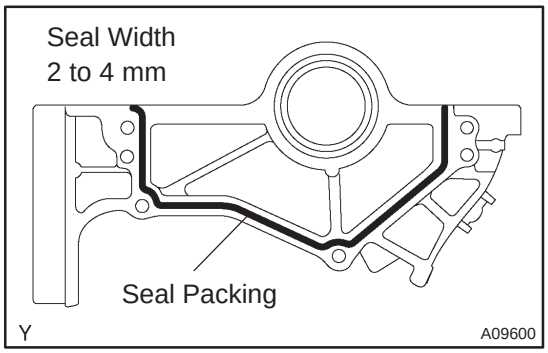


(b) Apply seal packing to the oil seal retainer as shown in the illustration.
**Seal packing: Part No. 08826–00080 or equivalent**
(1) Install a nozzle that has been cut to a 2 to 4 mm (0.08 to 0.16 in.) opening.
(2) Parts must be assembled within 15 minutes of application. Otherwise the material must be removed and reapplied.
(3) Immediately remove nozzle from the tube and reinstall the cap.



cardiagn.com

(c) Install the oil seal retainer with the 4 bolts. Tighten the 4 bolts uniformly in several steps.
**Torque: 8.8 N·m (90 kgf·cm, 78 in.·lbf)**

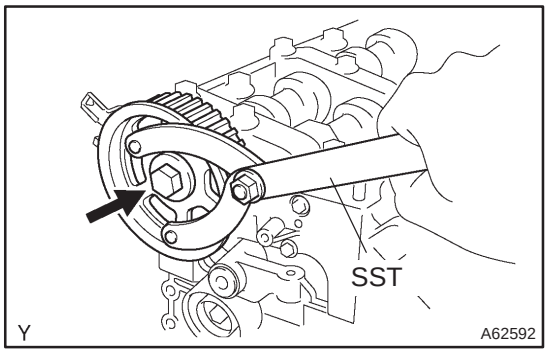


**46. INSTALL CAMSHAFT TIMING PULLEY**
(a) Install the pulley set key to the groove of the camshaft.
(b) Align the keyway of the timing pulley with the key located on the camshaft, slide the pulley into place.
(c) Using SST, install the pulley bolt.
SST 09960–10010 (09962–01000, 09963–01000)
**Torque: 88 N·m (899 kgf·cm, 65 ft·lbf)**

**47. INSTALL CAMSHAFT POSITION SENSOR (See page 10–63)**
**48. INSTALL INJECTOR ASSY (See page 11–60)**
**49. INSTALL NOZZLE LEAKAGE PIPE ASSY (See page 11–60)**
SST 09992–00242

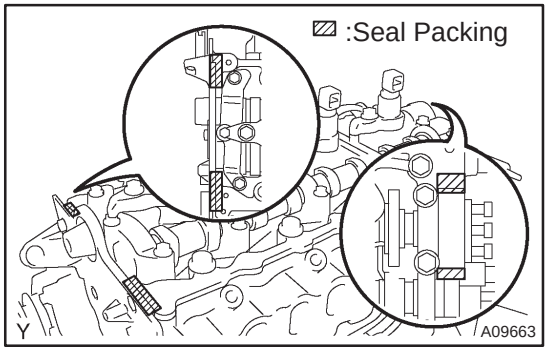


**50. INSTALL CYLINDER HEAD COVER SUB–ASSY**
(a) Remove any old packing (FIPG) material.
(b) Apply seal packing to the cylinder head.
**Seal packing: Part No. 08826–00080 or equivalent**
(c) Install the gasket to the cylinder head cover.
(d) Install the cylinder head cover with the 10 bolts.
**Torque: 13 N·m (135 kgf·cm, 9.7 ft·lbf)**

**51. INSTALL NOZZLE HOLDER SEAL**
(a) Install 4 new nozzle holder seals.
**52. INSTALL VACUUM PUMP ASSY**
**Torque: 21 N·m (214 kgf·cm, 15 ft·lbf)**

**53. INSTALL INJECTION PIPE SUB–ASSY NO.1 (See page 11–60)**
**NOTICE:**
**When assembling the pipes, perform the operation with the engine cold under room temperature.**
(a) Remove the vinyl or the plastic bag from the injector and vinyl tape from the common rail.
(b) Temporarily install the injection pipe.

cardiagn.com

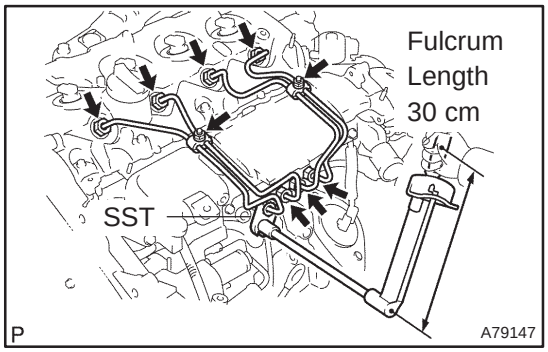


(c) Using SST, tighten the nut of the injection pipe to the common rail side.
SST 09023–12700
**Torque:**
**42 N·m (428 kgf·cm, 31 ft·lbf) for a used pipe using SST**
**46 N·m (469 kgf·cm, 34 ft·lbf) for a used pipe not using SST**
**31 N·m (316 kgf·cm, 23 ft·lbf) for a new pipe using SST**
**34 N·m (347 kgf·cm, 25 ft·lbf) for a new pipe not using SST**

HINT:
- Use a torque wrench with a fulcrum length of 30 cm (11.81 in.)
- Check if the used pipe has deflection or is installed properly after injection pipe is reassembled. If there is deflection or if it can not be installed properly, replace the used pipe with a new pipe.

(d) Using SST, tighten the nut of the injection pipe to the injector side.
SST 09023–12700
**Torque:**
**42 N·m (428 kgf·cm, 31 ft·lbf) for a used pipe using SST**
**46 N·m (469 kgf·cm, 34 ft·lbf) for a used pipe not using SST**
**31 N·m (316 kgf·cm, 23 ft·lbf) for a new pipe using SST**
**34 N·m (347 kgf·cm, 25 ft·lbf) for a new pipe not using SST**

HINT:
- Use a torque wrench with a fulcrum length of 30 cm (11.81 in.)
- Check if the used pipe has deflection or is installed properly after injection pipe is reassembled. If there is deflection or if it can not be installed properly, replace the used pipe with a new pipe.

(e) Install the 2 upper injection pipe clamps with the 2 nuts.
**Torque: 5.0 N·m (51 kgf·cm, 44 in.·lbf)**

**54. INSTALL INJECTION PIPE SUB–ASSY NO.2**
SST 09023–12700
HINT:
Perform the same procedures as injection pipe No. 1.

**55. INSTALL INJECTION PIPE SUB–ASSY NO.3**
SST 09023–12700
HINT:
Perform the same procedures as injection pipe No. 1.

**56. INSTALL INJECTION PIPE SUB–ASSY NO.4**
SST 09023–12700
HINT:
Perform the same procedures as injection pipe No. 1.

**57. INSTALL TIMING BELT (See page 14–307)**

**58. CHECK VALVE TIMING (See page 14–307)**



cardiagn.com

59. **INSTALL TIMING CHAIN COVER PLATE (See page 14–307)**
60. **INSTALL TRANSVERSE ENGINE ENGINE MOUNTING BRACKET (See page 14–307)**
61. **INSTALL TIMING BELT GUIDE (See page 14–307)**
62. **INSTALL TIMING BELT NO.1 COVER (See page 14–307)**
63. **INSTALL TIMING BELT NO.2 COVER (See page 14–307)**
64. **INSTALL IDLER PULLEY SUB–ASSY (See page 14–307)**
65. **INSTALL CRANKSHAFT PULLEY (See page 14–307)**
    SST 09213–54015 (90105–08076), 09330–00021
66. **INSTALL ENGINE MOUNTING INSULATOR SUB–ASSY RH (See page 14–307)**
67. **INSTALL POWER STEERING IDLE PULLEY BRACKET (See page 14–286)**
68. **ADJUST V (COOLER COMPRESSOR TO CRANKSHAFT PULLEY) BELT NO.1 (See page 14–269)**
69. **INSTALL INJECTOR DRIVER (See page 14–286)**
70. **INSTALL AIR TUBE NO.1 (See page 14–270)**
71. **INSTALL VACUUM RESERVOIR SUB–ASSY**
    **Torque: 8.3 N·m (85 kgf·cm, 73 in.·lbf)**
72. **INSTALL AIR CLEANER ASSY (See page 14–286)**
73. **INSTALL ENGINE COVER NO.1**
    **Torque: 8.0 N·m (82 kgf·cm, 71 in.·lbf)**
74. **INSTALL FRONT WHEEL RH**
    **Torque: 103 N·m (1,050 kgf·cm, 76 ft·lbf)**
75. **CHECK FOR FUEL LEAKS (See page 11–60)**

cardiagn.com

# CAMSHAFT (1ZZ–FE/3ZZ–FE)

## COMPONENTS

141CJ–01

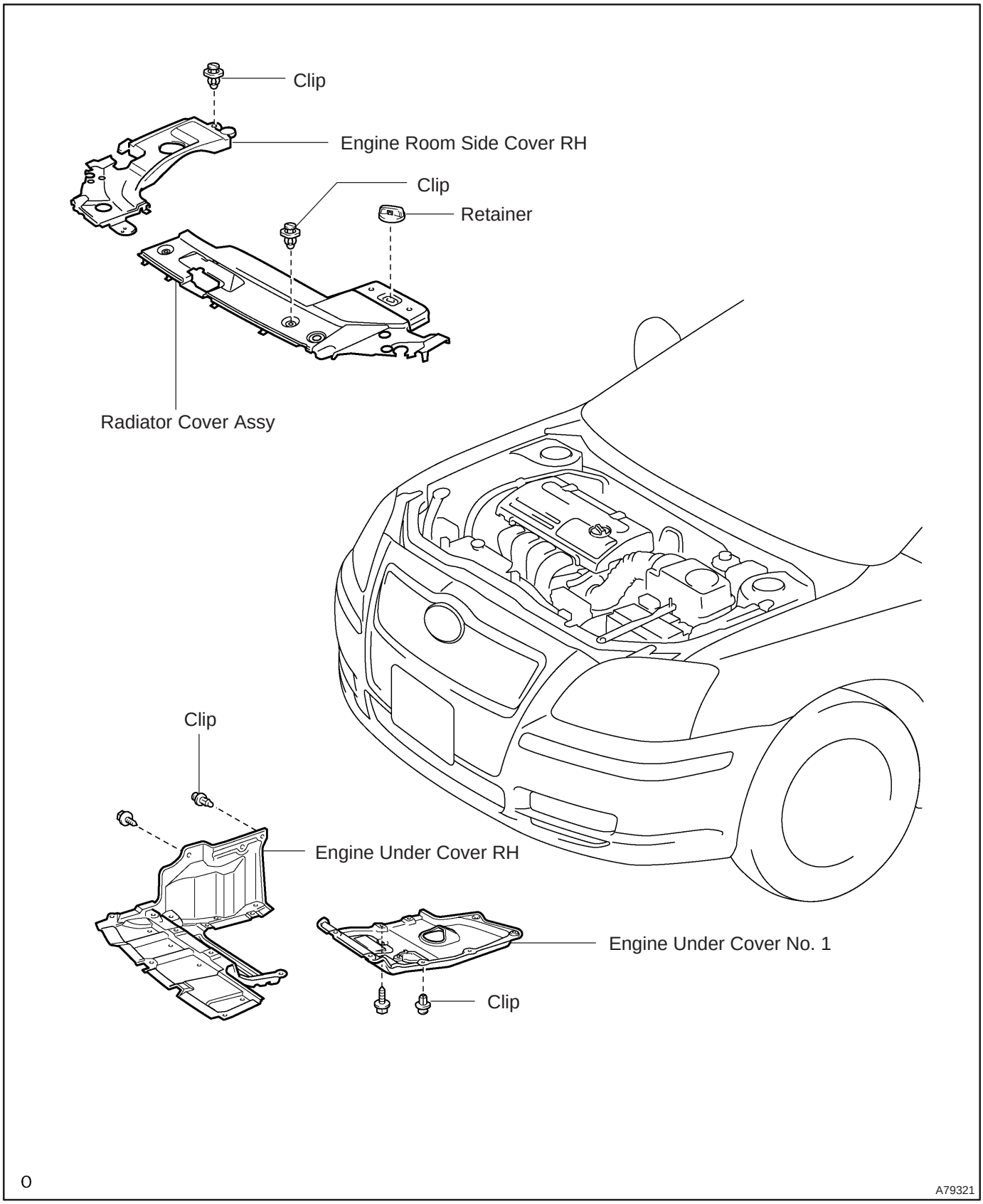


cardiagn.com

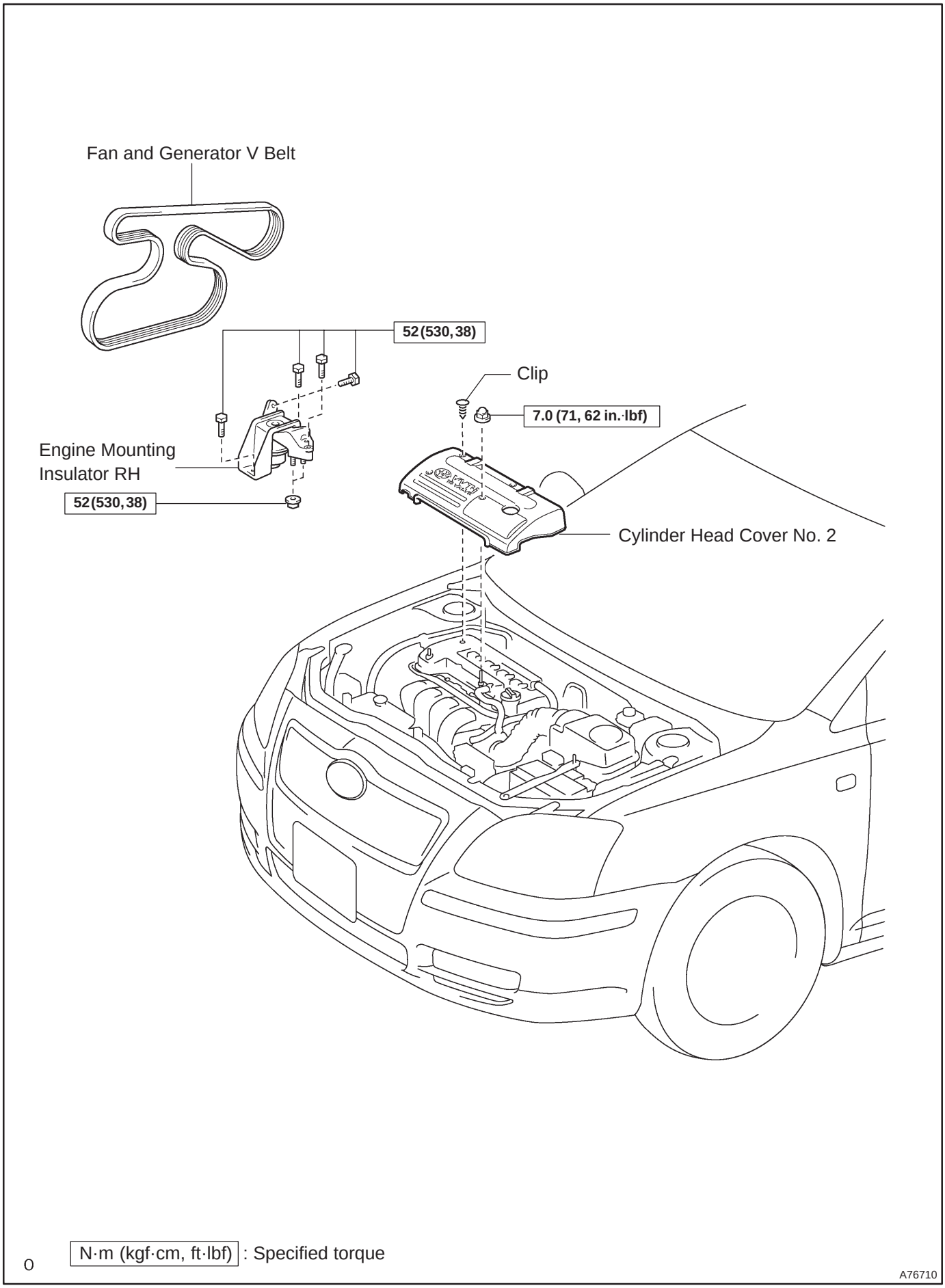


cardiagn.com

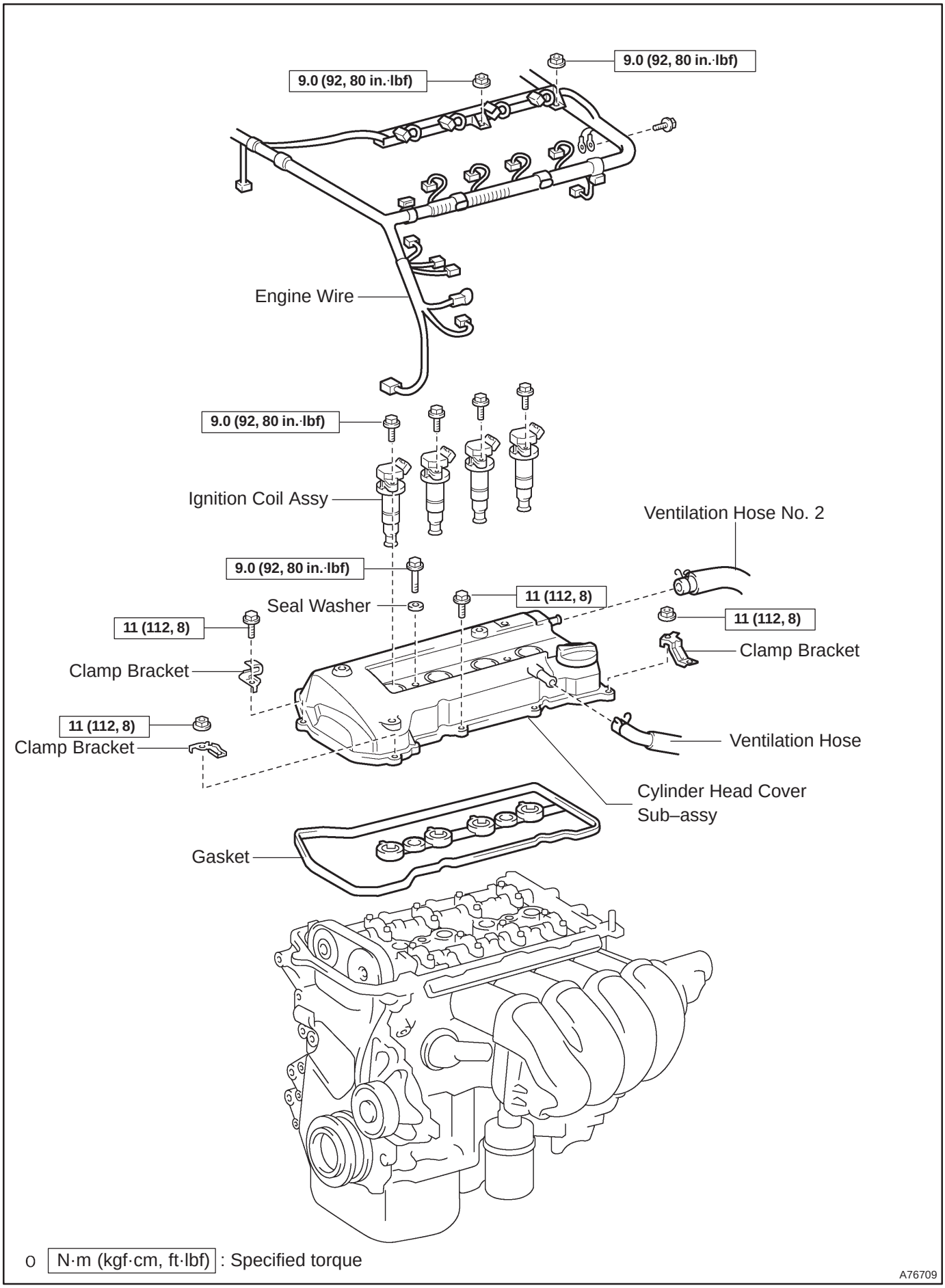


cardiagn.com

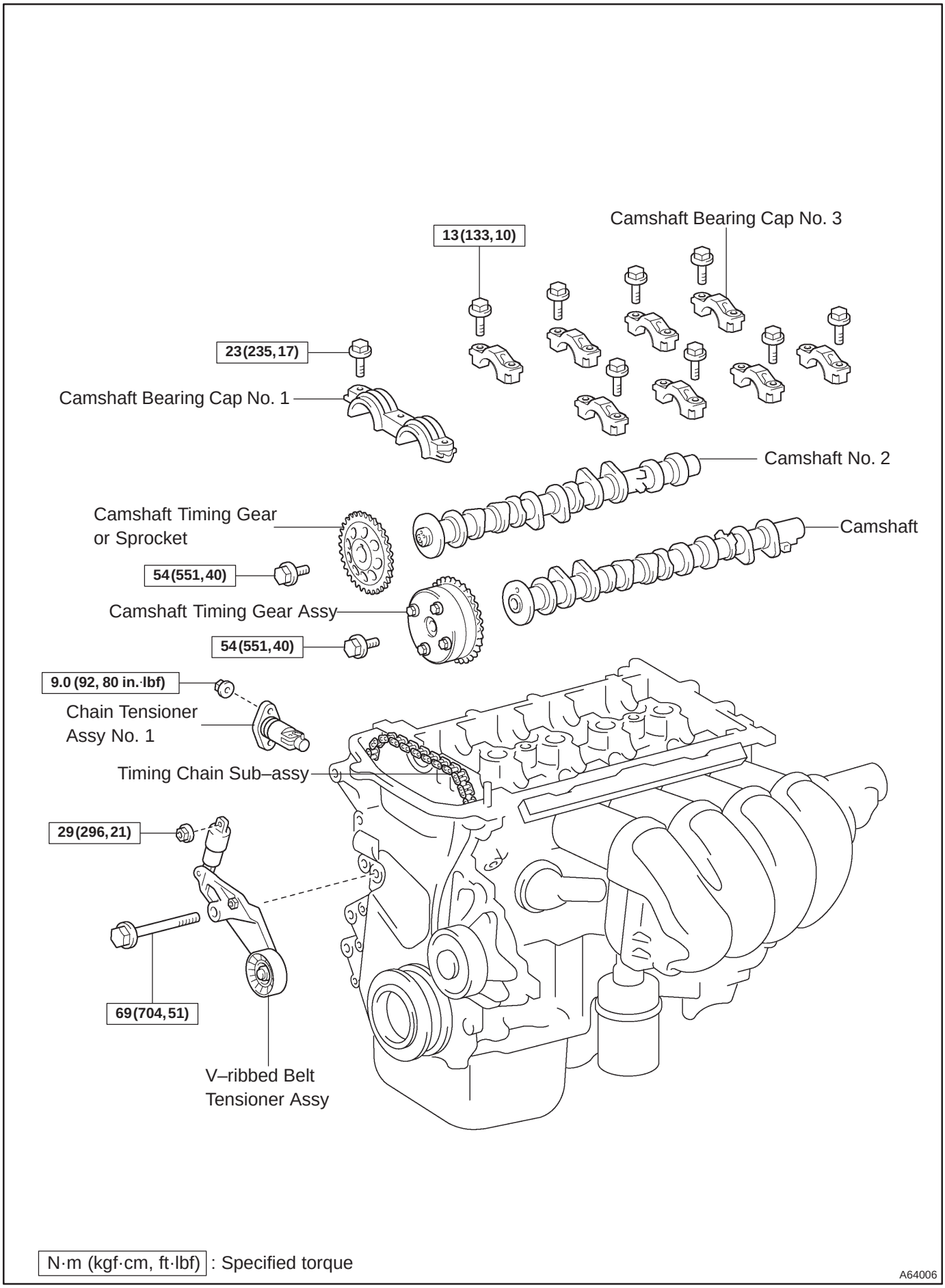


cardiagn.com

141CK–01

# REPLACEMENT

1. **REMOVE RADIATOR SUPPORT OPENING COVER (See page 14–27)**
2. **REMOVE ENGINE UNDER COVER RH (See page 14–27)**

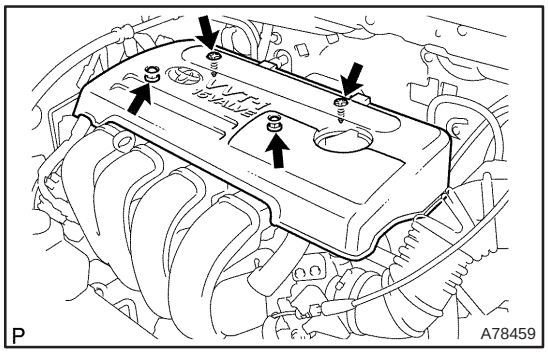


3. **REMOVE CYLINDER HEAD COVER NO.2**

(a) Remove and the 2 screw and 2 clips and detach the engine under cover No.2.

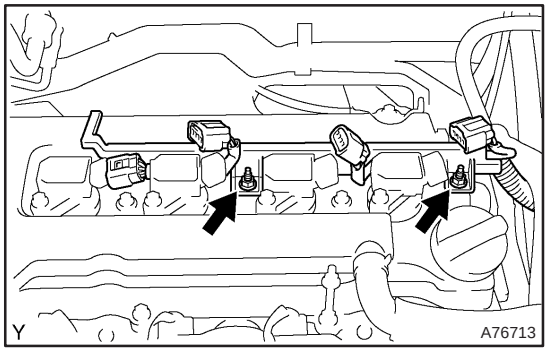


4. **DISCONNECT COIL, IGNITION**

(a) Remove the 5 clamps from the 5 clamp brackets.
(b) Disconnect the 4 ignition coil connectors.
(c) Remove the 2 nuts which are used to secure the engine wire.

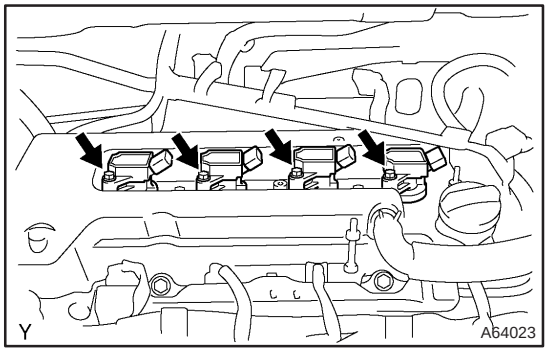


(d) Remove the 4 bolts and the 4 ignition coils.

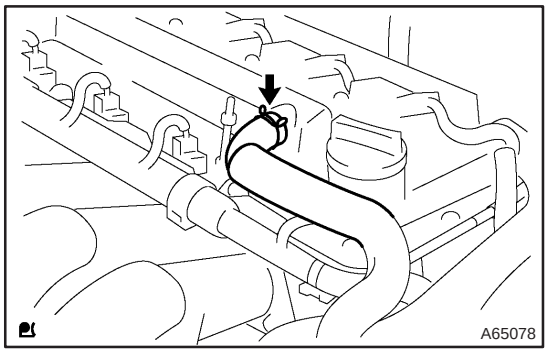


5. **DISCONNECT VENTILATION HOSE**

(a) Disconnect the ventilation hose from the cylinder head cover.

cardiagn.com

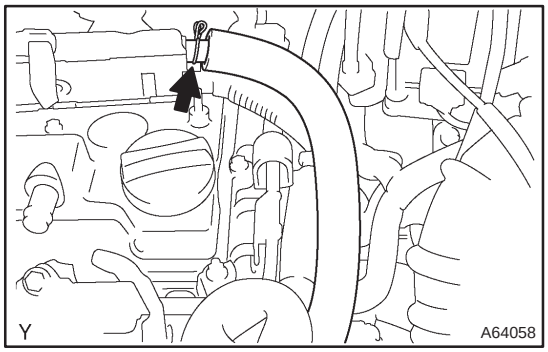


**6. DISCONNECT VENTILATION HOSE NO.2**

(a) Disconnect the ventilation hose from the cylinder head cover.

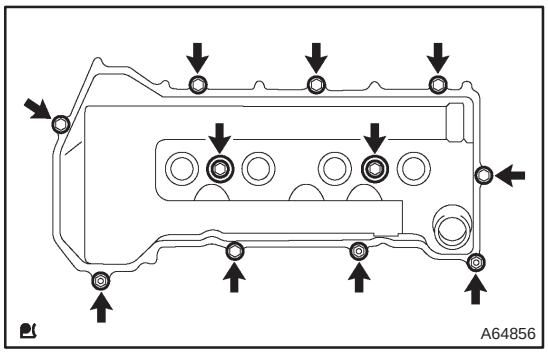


**7. REMOVE CYLINDER HEAD COVER SUB–ASSY**

(a) Remove the 9 bolts, 2 seal washers, 2 nuts, and 3 clamp brackets.

(b) Remove the cylinder head cover.

**8. REMOVE ENGINE UNDER COVER SUB–ASSY NO.1 (See page 14–27)**

**9. REMOVE ENGINE ROOM COVER SIDE (See page 14–27)**

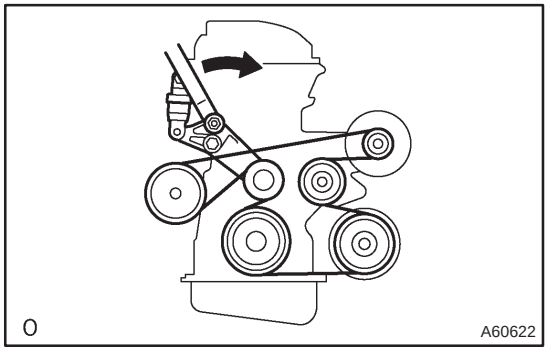


**10. REMOVE FAN AND GENERATOR V BELT**

(a) Turn the V–ribbed belt tensioner clockwise slowly and loosen it. Then, remove the fan and generator V belt and put back the V–ribbed belt tensioner carefully.

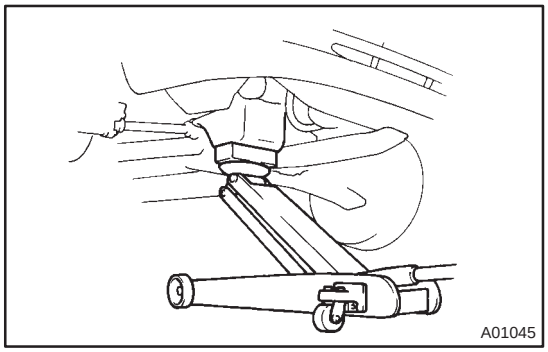


**11. REMOVE ENGINE MOUNTING INSULATOR SUB–ASSY RH**

(a) Place a wooden block on a jack underneath the engine. Remove the 4 bolts and 2 nuts and detach the engine mounting insulator RH.

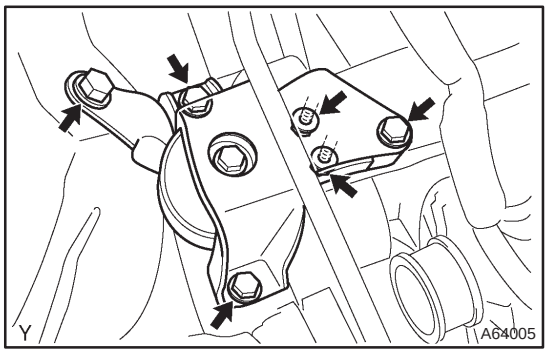


cardiagn.com

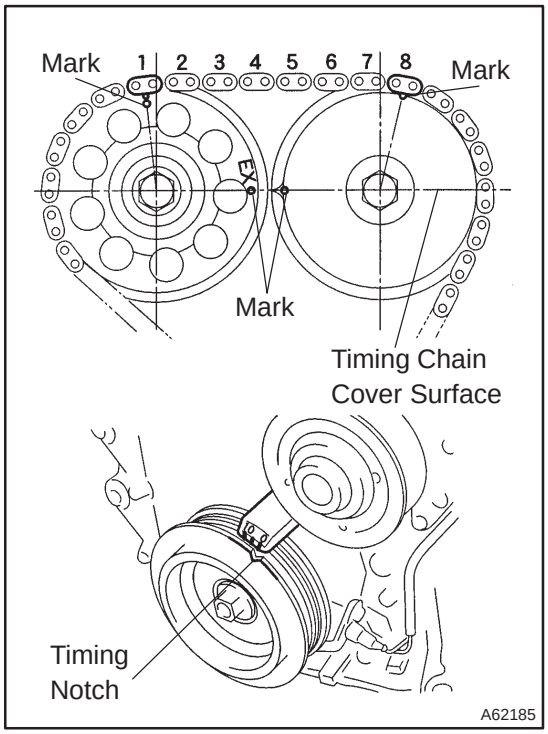


**12. SET NO. 1 CYLINDER TO TDC/COMPRESSION**

(a) Turn the crankshaft pulley to align the timing notch with timing mark ”0” of the timing chain cover.

(b) Check that the point marks of the camshaft timing sprocket and VVT timing sprocket are in straight line on the timing chain cover surface as shown in the illustration.

HINT:

If not, turn the crankshaft 1 revolution (360°) and align the marks as above.

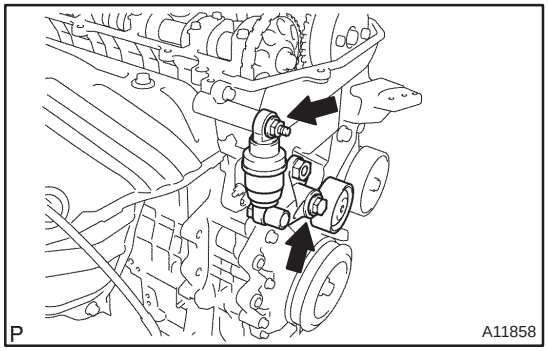


**13. REMOVE V–RIBBED BELT TENSIONER ASSY**

(a) Remove the bolt and nut, then remove the V–ribbed belt tensioner.

HINT:

Jack up and down to remove the bolt.

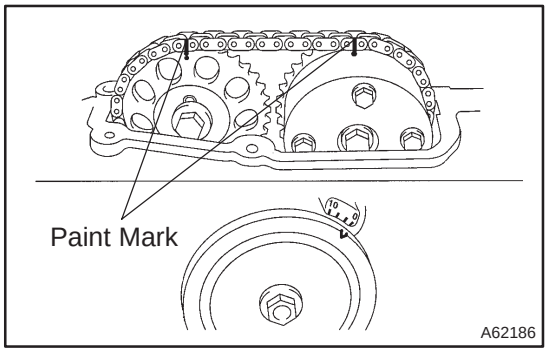


**14. REMOVE CAMSHAFT**

**NOTICE:**

**Do not revolve the crankshaft without the chain tensioner.**

(a) Set the No. 1 cylinder to the TDC/compression.

(b) Place match marks on the timing chain and the camshaft timing sprockets.

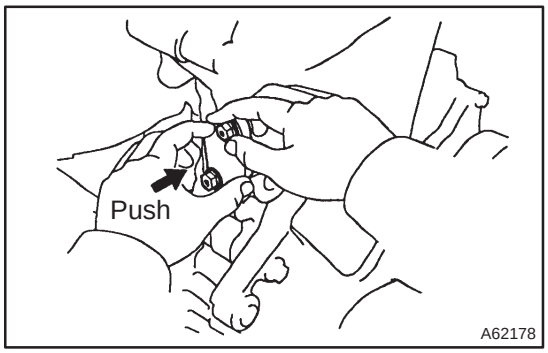


(c) Remove the 2 nuts and the chain tensioner.

cardiagn.com

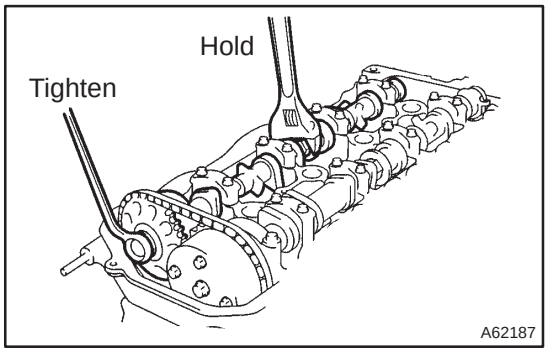


(d) Hold the camshaft with a wrench, loosen the camshaft timing gear set bolt.

**NOTICE:**

**Be careful not to damage the valve lifter.**

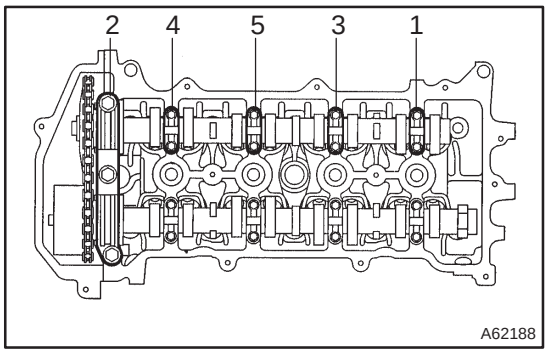


(e) Using several steps, loosen the camshaft bearing cap bolts on No. 2 camshaft in the sequence shown in the illustration. Remove the bearing caps.

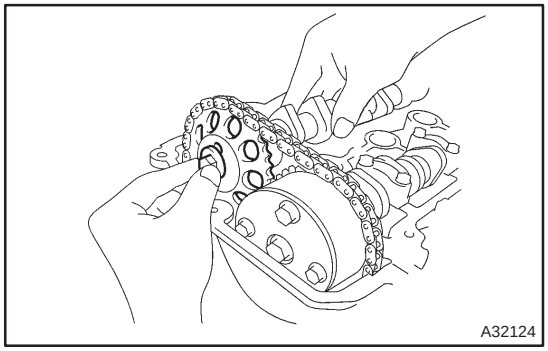


(f) Remove the camshaft timing gear as shown in the illustration.

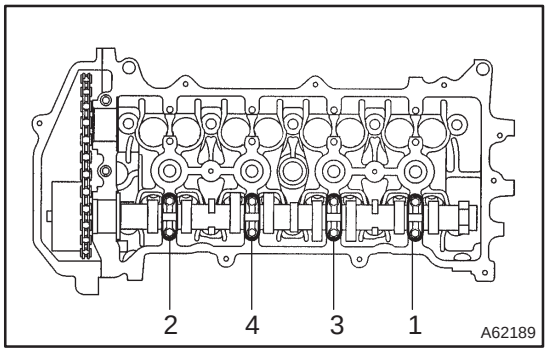


(g) Using several steps, loosen the camshaft bearing cap bolts on camshaft in the sequence shown in the illustration. Remove the bearing caps.

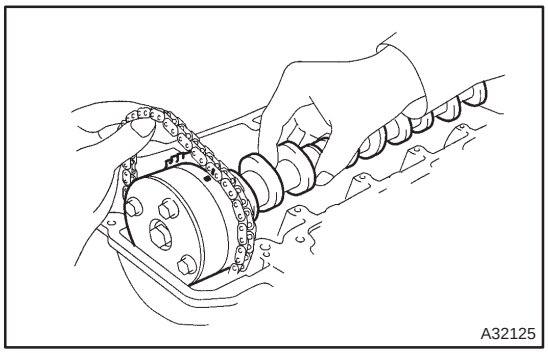


(h) Remove the camshaft as holding the timing chain.

cardiagn.com

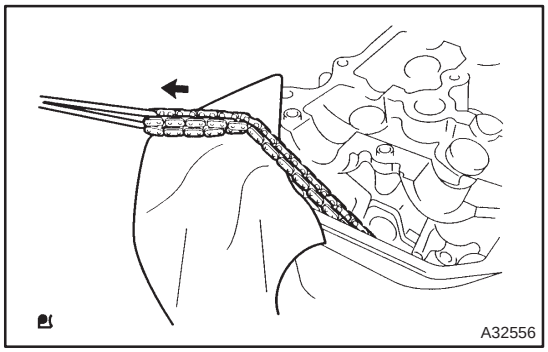


(i) Tie the timing chain with a string as shown in the illustration.

**NOTICE:**

**Be careful not to drop anything inside the timing chain cover.**

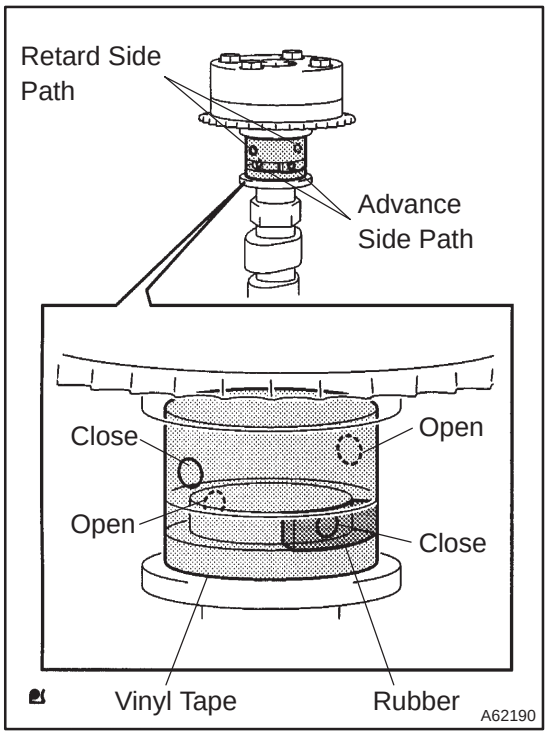


**15. INSPECT CAMSHAFT TIMING GEAR ASSY**

(a) Check the lock of camshaft timing gear.

(1) Clamp the camshaft in a vice, and confirm the camshaft timing gear is locked.

**NOTICE:**

**Be careful not to damage the camshaft.**

(b) Release lock pin.

(1) Cover 4 oil paths of the cam journal with vinyl tape as shown in the illustration.

HINT:

The one of the 2 glooves on the cam journal is for retards (upper) and the rest is for advances (lower). Each groove has the 2 oil paths. Plug one of the oil paths for each groove with rubber pieces before wrapping the cam journal with the tape.

(2) Punctuate the tape for the advance oil path and for the retard oil path in the opposite side from the advance as shown in the illustration.

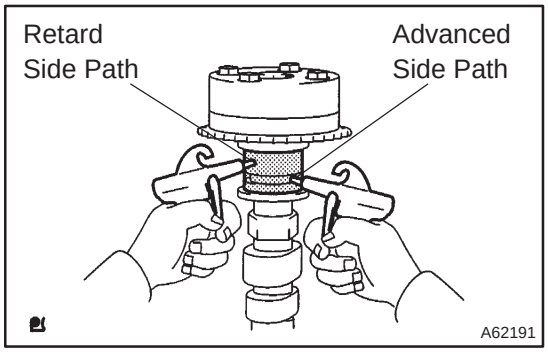


(3) Put air pressure into two broken paths (the advance side path and the retard side path) with about 150 kPa {1.5 kgf·cm}.

**CAUTION:**

**Cover the pathes with shop rag to avoid oil splashing.**

cardiagn.com

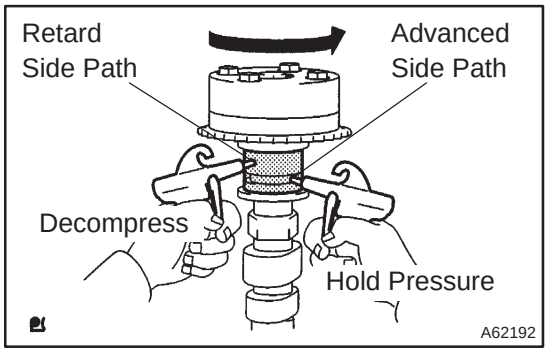


(4) Confirm if the camshaft timing gear assembly revolves in the timing advance direction when weakening the air pressure of the timing retard path.

HINT:

When the lock pin is released, the camshaft timing gear revolves in the advance direction.

(5) When the camshaft timing gear comes to the most advanced position, take out the air pressure of the timing retard side path, and then take out that of timing advance side path.

**CAUTION:**

**Camshaft timing assembly gear occasionally shifts to the retard side abruptly, if the air compression of the advanced side path is released first. It often causes the breakage of the lock pin.**

(c) Check smooth revolution

(1) Revolve the camshaft timing gear assembly within the movable range [20° (40°CA)] except for the most retarded position several times, and check the smooth revolution.

**CAUTION:**

**Be sure to perform this check by hand, instead of air pressure.**

(d) Check the lock in the most retarded position.

(1) Confirm that the camshaft timing gear assembly is locked at the most retarded position.

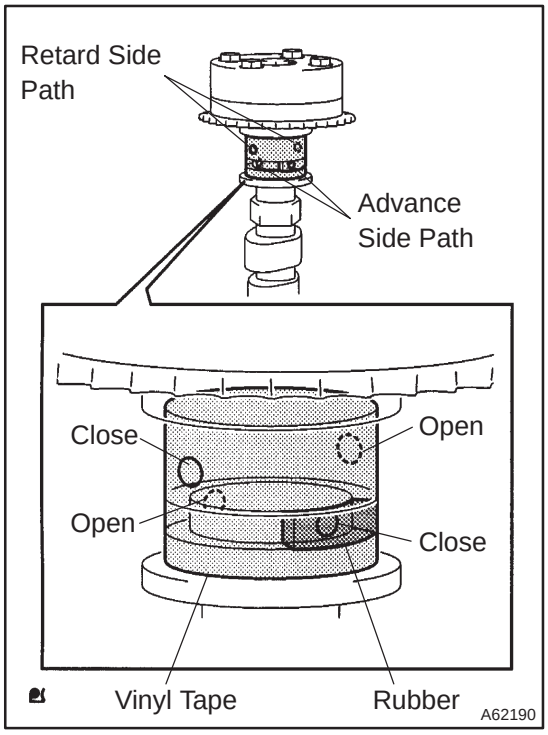


**16. REMOVE CAMSHAFT TIMING GEAR ASSY**

(a) Clamp the camshaft in a vice, and confirm that the gear is locked.

**CAUTION:**

**Be careful not to damage the camshaft.**

(b) Cover 4 oil paths of cam journal with vinyl tape as shown in the illustration.

HINT:

The one of the 2 glooves on the cam journal is for retards (upper) and the rest is for advances (lower). Each groove has the 2 oil paths. Plug one of the oil paths for each groove with rubber pieces before wrapping the cam journal with the tape.

(1) Punctuate the tape for the advance oil path and for the retard oil path in the opposite side from the advance as shown in the illustration.

cardiagn.com

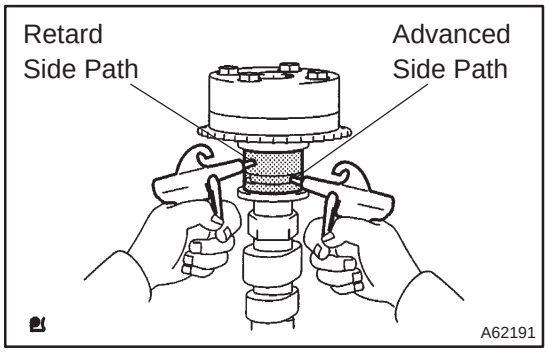


(c) Put air pressure into two broken paths (the advance side path and the retard side path) with about 150 kPa {1.5 kgf·cm}.

**CAUTION:**

**Cover the paths with shop rag to avoid oil splashing.**

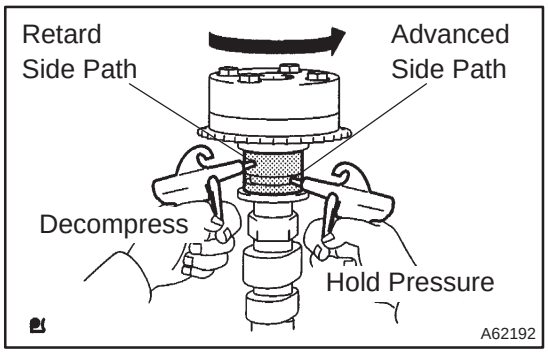


(d) Confirm if the camshaft timing gear assembly revolves in the timing advance direction when weakening the air pressure of the timing retard path.

HINT:

When the lock pin is released, the camshaft timing gear revolves in the advance direction.

(e) When the camshaft timing gear comes to the most advanced position, take out the air pressure of the timing retard side path, next, take out that of timing advance side path.

**CAUTION:**

**Camshaft timing gear assembly occasionally shifts to the retard side abruptly, if the air compression of the advanced side path is released first. It often causes the breakage of the lock pin.**

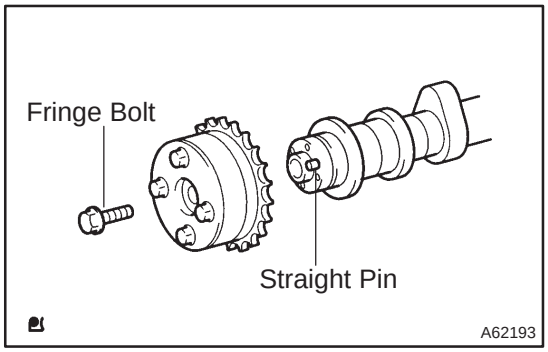


(f) Remove the fringe bolt of camshaft timing gear assembly.

**NOTICE:**

- **Be sure not to remove the other 4 bolts.**
- **In case of reusing the camshaft timing gear, release the straight pin lock first, and then install the gear.**

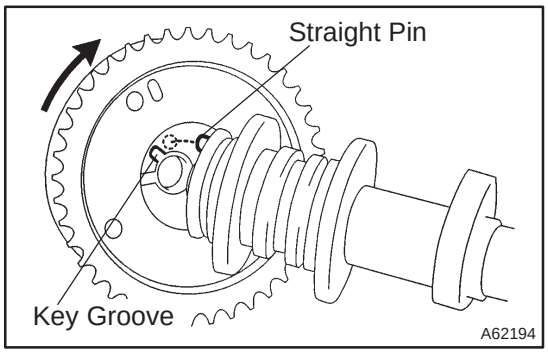


**17. INSTALL CAMSHAFT TIMING GEAR ASSY**

(a) Put the camshaft timing gear assembly and the camshaft together with the straight pin off the key groove.

(b) Turn the camshaft timing gear assembly clockwise (as shown in the illustration) while pushing it lightly against the camshaft. Push further at the position where the pin gets into the groove.

**CAUTION:**

**Be sure not to turn the camshaft timing gear to the retard angle side (to the right angle).**



cardiagn.com

(c) Check that there is no clearance between the gear's fringe and the camshaft.

(d) Tighten the fringe bolt with the camshaft timing gear fixed.
**Torque: 54 N·m (551 kgf·cm 40 ft·lbf)**

(e) Check that the camshaft timing gear assembly can move to the retard angle side (the right angle) and is locked at the most retarded position.

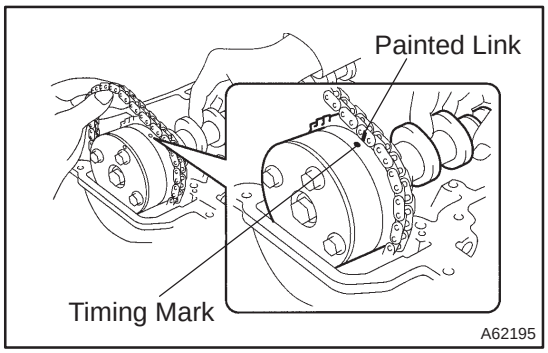


**18. INSTALL CAMSHAFT**

(a) Install the timing chain on the camshaft timing gear with the painted links aligned with the timing marks on the camshaft timing gear as shown in the illustration.

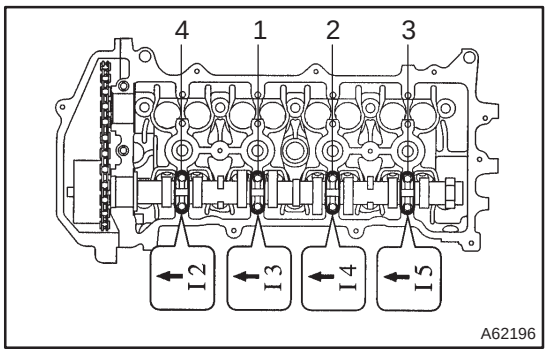


(b) Examine the front marks and numbers and tighten the bolts in the sequence shown in the illustration.
**Torque: 13 N·m (133 kgf·cm, 10 ft·lbf)**

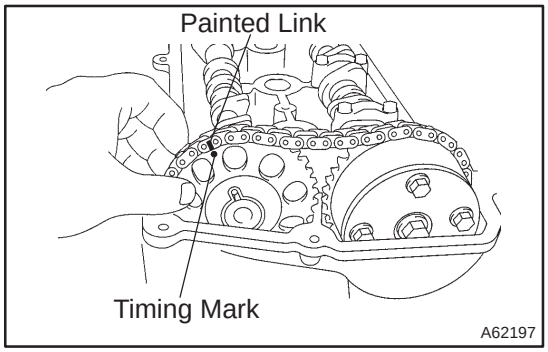


(c) Put the camshaft No.2 on the cylinder head with the painted links of the chain aligned with the timing mark on the camshaft timing gear.

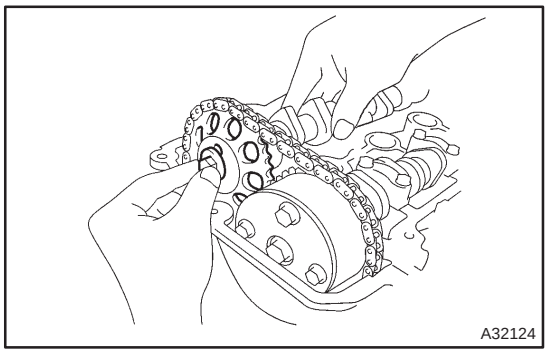


(d) Tighten the camshaft timing gear set bolt temporarily.

cardiagn.com

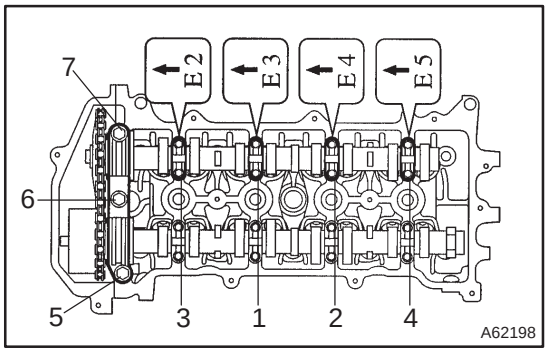


(e) Examine the front marks and numbers and tighten the bolts in the sequence shown in the illustration.
**Torque: 13 N·m (133 kgf·cm, 10 ft·lbf)**

(f) Install the bearing cap No. 1.
**Torque: 23 N·m (235 kgf·cm, 17 ft·lbf)**

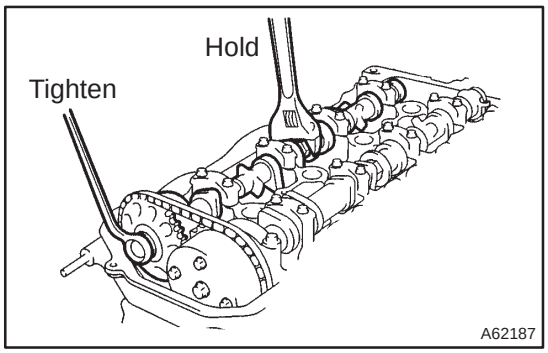


(g) Hold the camshaft with a wrench, tighten the camshaft timing gear set bolt.
**Torque: 54 N·m (551 kgf·cm, 40 ft·lbf)**

**NOTICE:**
**Be careful not to damage the valve lifter.**

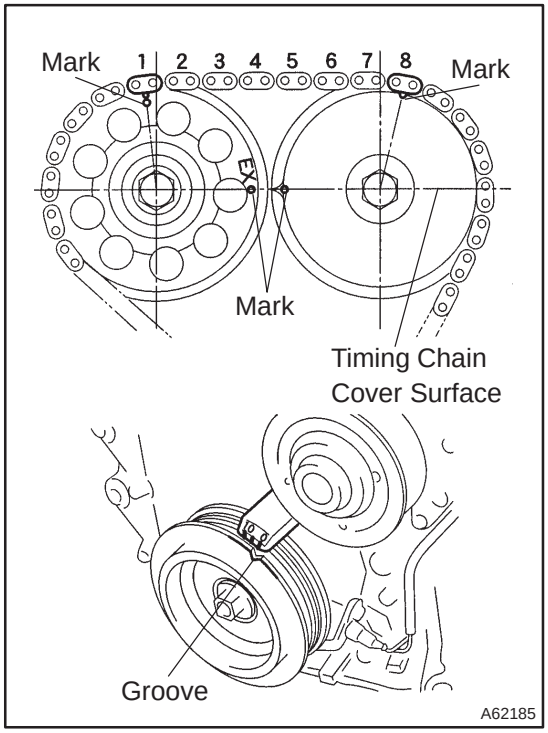


(h) Check that the match marks on the 2 camshaft sprockets are aligned with each other and are aligned with the painted links of the timing chain as shown in the illustration. Also, check the timing notch is aligned with the timing mark ”0” of the chain cover.

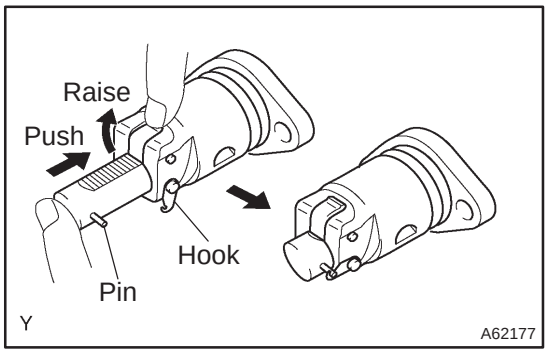


(i) Install chain tensioner.
(1) Check that the O–ring is clean, and set the hook as shown in the illustration.

cardiagn.com

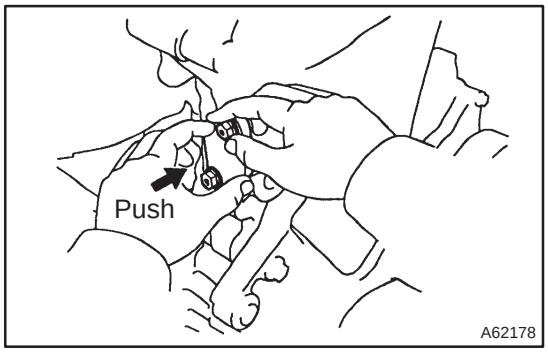


(2) Apply engine oil to the chain tensioner and install it with the 2 nuts.
**Torque: 9.0 N·m (92 kgf·cm, 80 in·lbf)**

**NOTICE:**
**If the hook released the plunger during installation, re–hook the plunger by the hook to fix it.**

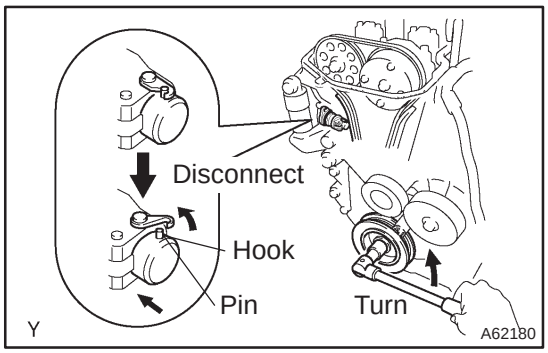


(3) Turn the crankshaft counter clockwise, and take the hook off the knock pin to release the plunger.

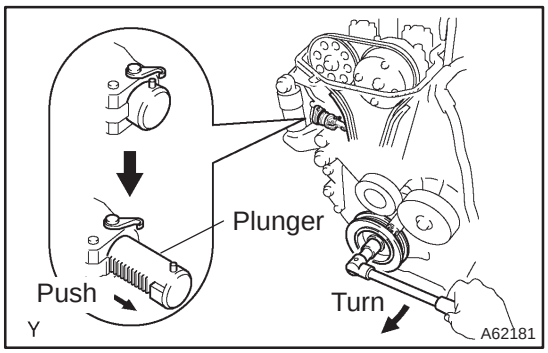


(4) Turn the crankshaft clockwise, and check that the plunger is extended.

HINT:
If the plunger does not be extended, press the slipper into the chain tensioner using a screwdriver so that the hook is took off from the knock pin and let the plunger can be extended.

**19. ADJUST VALVE CLEARANCE (See page 14–6)**

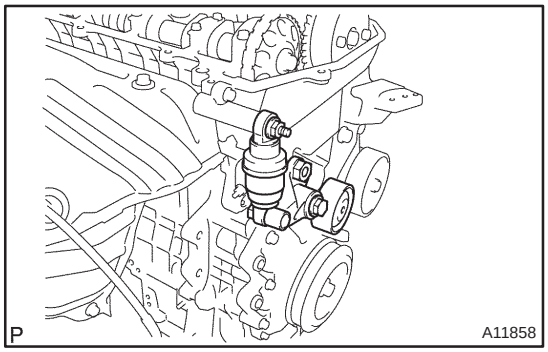


**20. INSTALL V–RIBBED BELT TENSIONER ASSY**

(a) Install the V–ribbed belt tensioner with the nut and bolt.
**Torque:**
**29 N·m (296 kgf·cm, 21 ft·lbf) for Nut**
**69 N·m (704 kgf·cm, 51 ft·lbf) for Bolt**

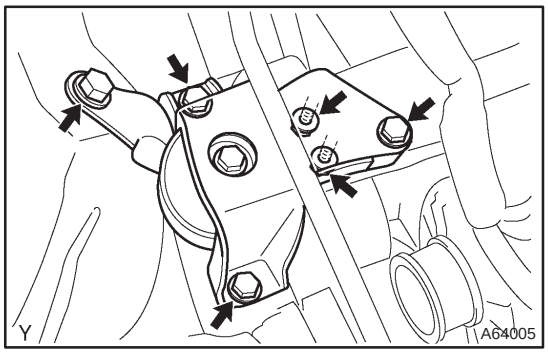


**21. INSTALL ENGINE MOUNTING INSULATOR SUB–ASSY RH**

(a) Install the engine mounting insulator with the 4 bolts and 2 nuts.
**Torque: 52 N·m (530 kgf·cm, 38 ft·lbf)**

cardiagn.com

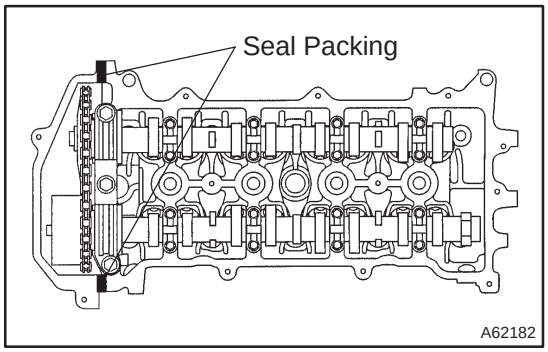


**22. INSTALL CYLINDER HEAD COVER SUB–ASSY**

(a) Remove any old packing (FIPG) material.

(b) Apply seal packing to the 2 locations as shown in the illustration.

**Seal packing: Part No. 08826–00080 or equivalent**

**NOTICE:**

- **Remove any oil from the contact surface.**
- **Install the cylinder head cover within 3 minutes after applying seal packing.**
- **Do not expose the seal to engine oil 2 hours after installing.**

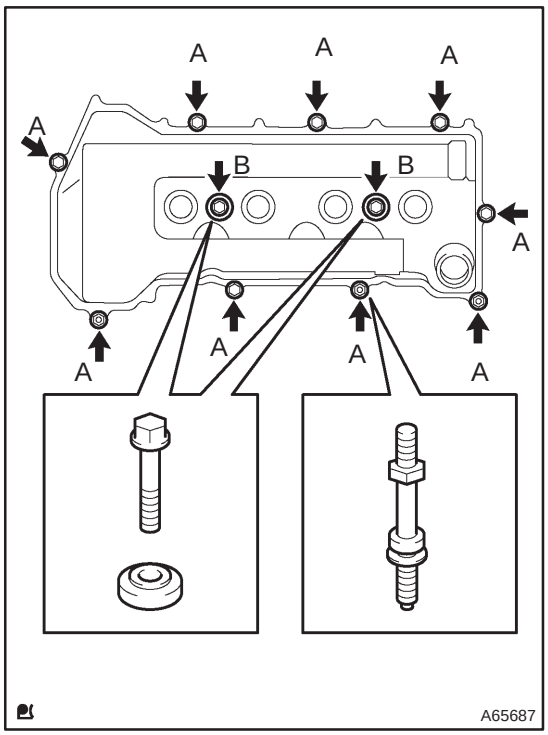


(c) Install the cylinder head cover and 3 cable brackets with the 9 bolts, 2 seal washers and 2 nuts. Tighten the bolts and nuts uniformly in the several steps.

**Torque:**
**11 N·m (112 kgf·cm, 8 ft·lbf) for A**
**9.0 N·m (92 kgf·cm, 80 in·lbf) for B**

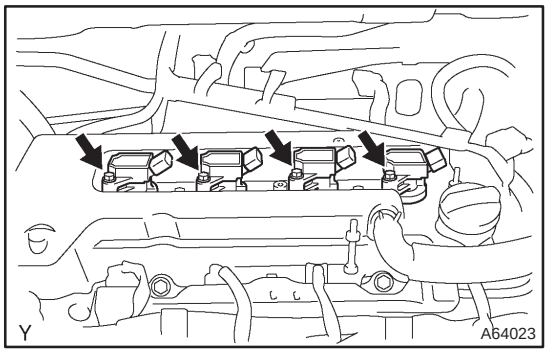


**23. INSTALL IGNITION COIL ASSY**

(a) Install the 4 ignition coils with the 4 bolts.

**Torque: 9.0 N·m (92 kgf·cm, 80 in.·lbf)**

cardiagn.com

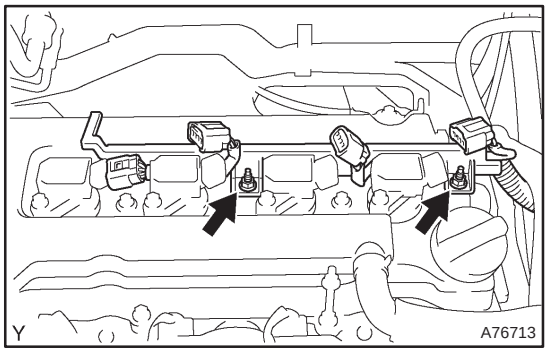


(b) Install the engine wire with the 2 nuts.
**Torque: 9.0 N·m (92 kgf·cm, 80 in.·lbf)**

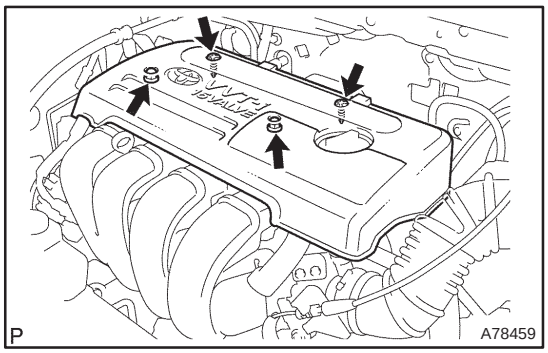


**24. INSTALL CYLINDER HEAD COVER NO.2**

(a) Install the cylinder head cover with the 2 nuts and 2 clips.
**Torque: 7.0 N·m (71 kgf·cm, 62 in.·lbf)**

**25. CHECK FOR ENGINE OIL LEAKS**

cardiagn.com

# CHAIN SUB–ASSY (1AZ–FE)

141B7–01

## COMPONENTS

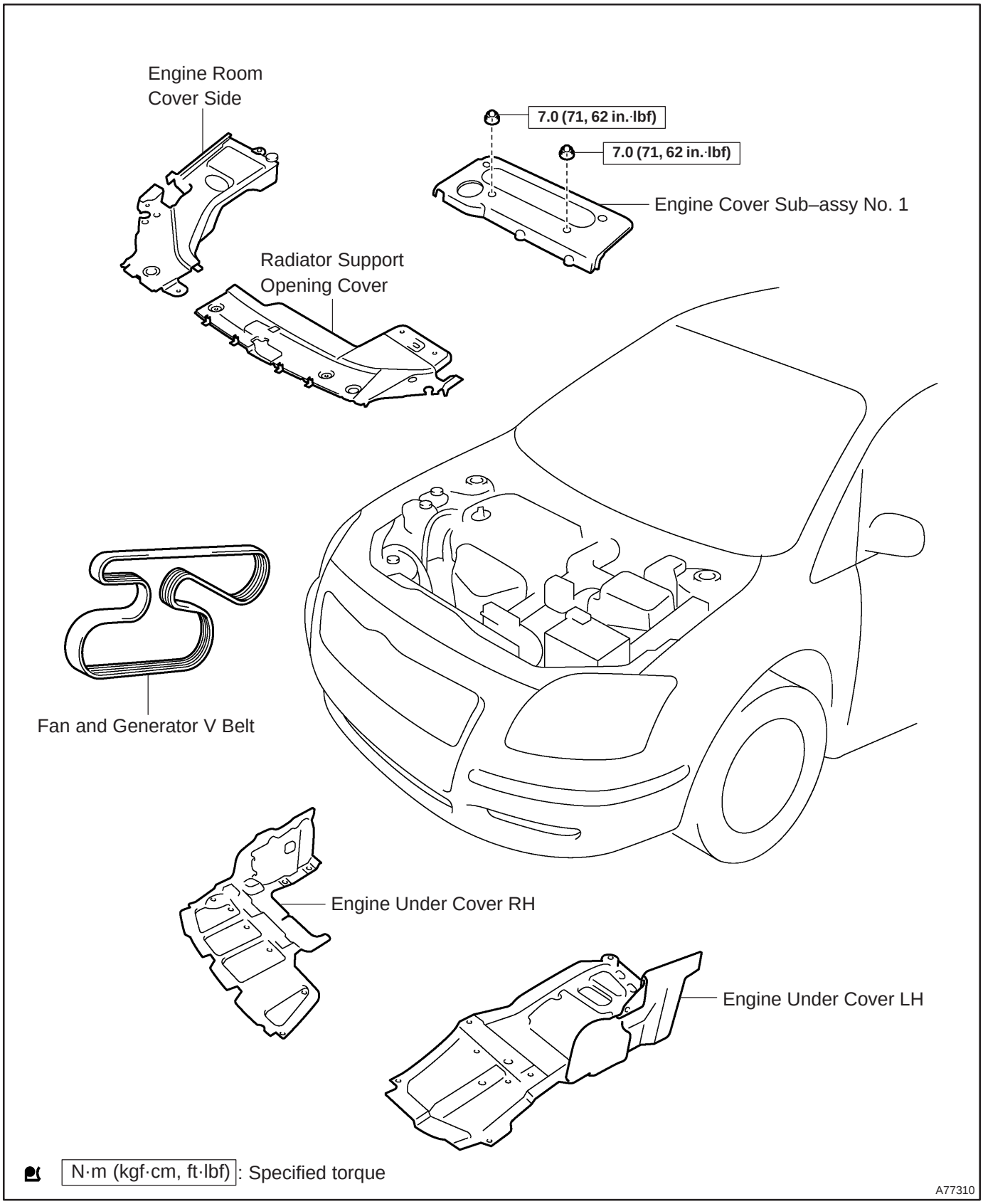


cardiagn.com

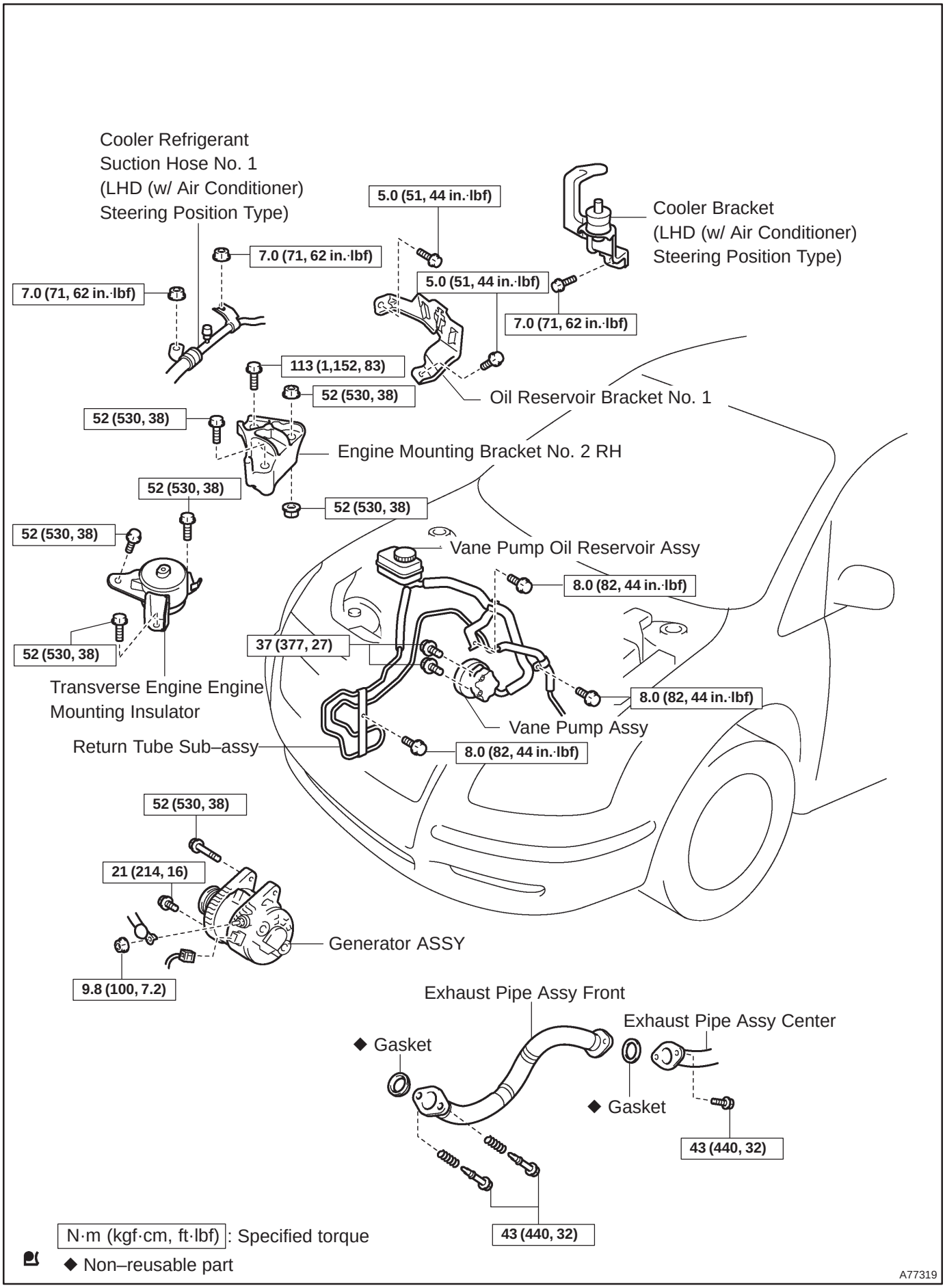


cardiagn.com

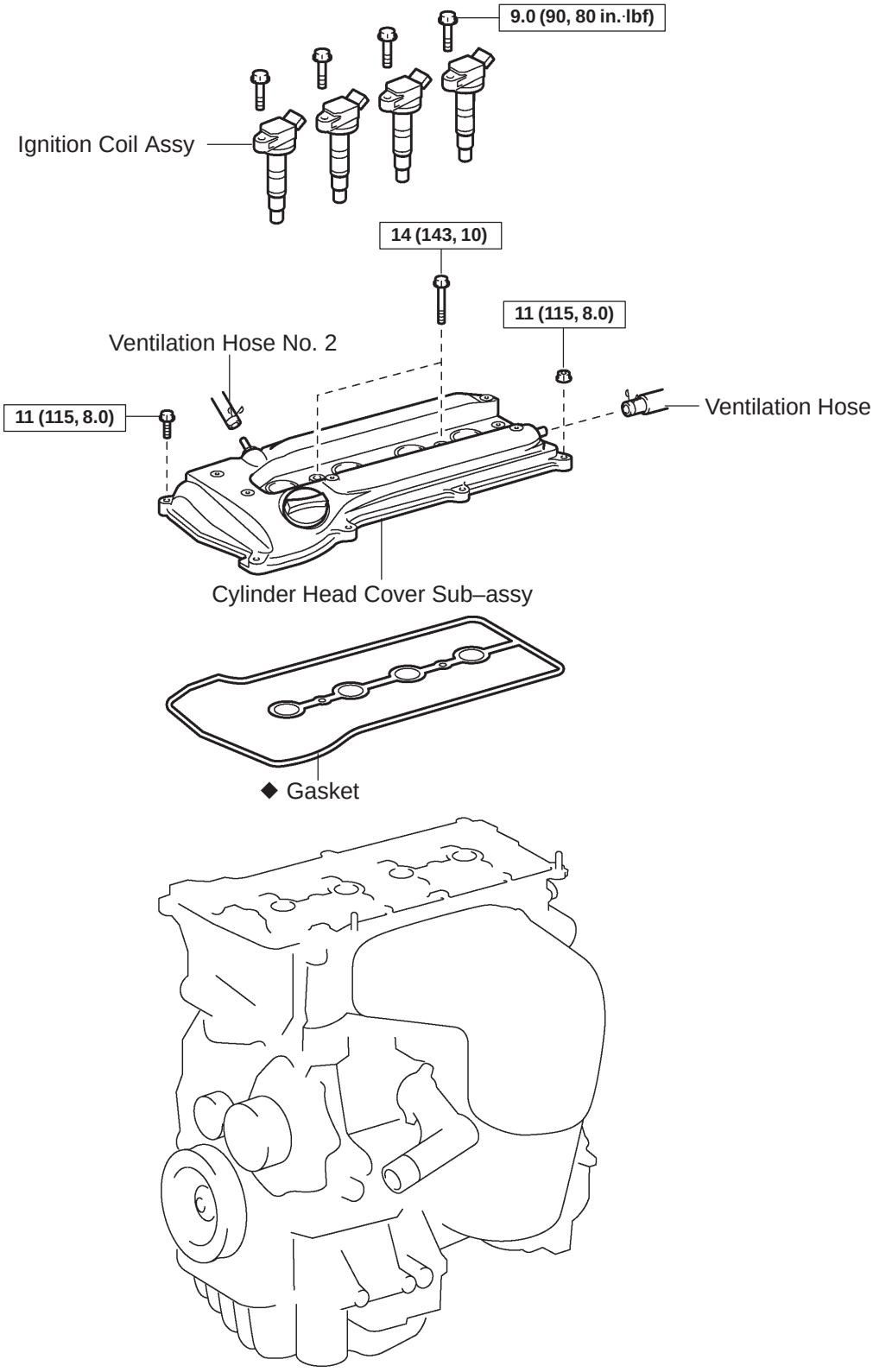


N·m (kgf·cm, ft·lbf) : Specified torque

◆ Non–reusable part

A77320

cardiagn.com

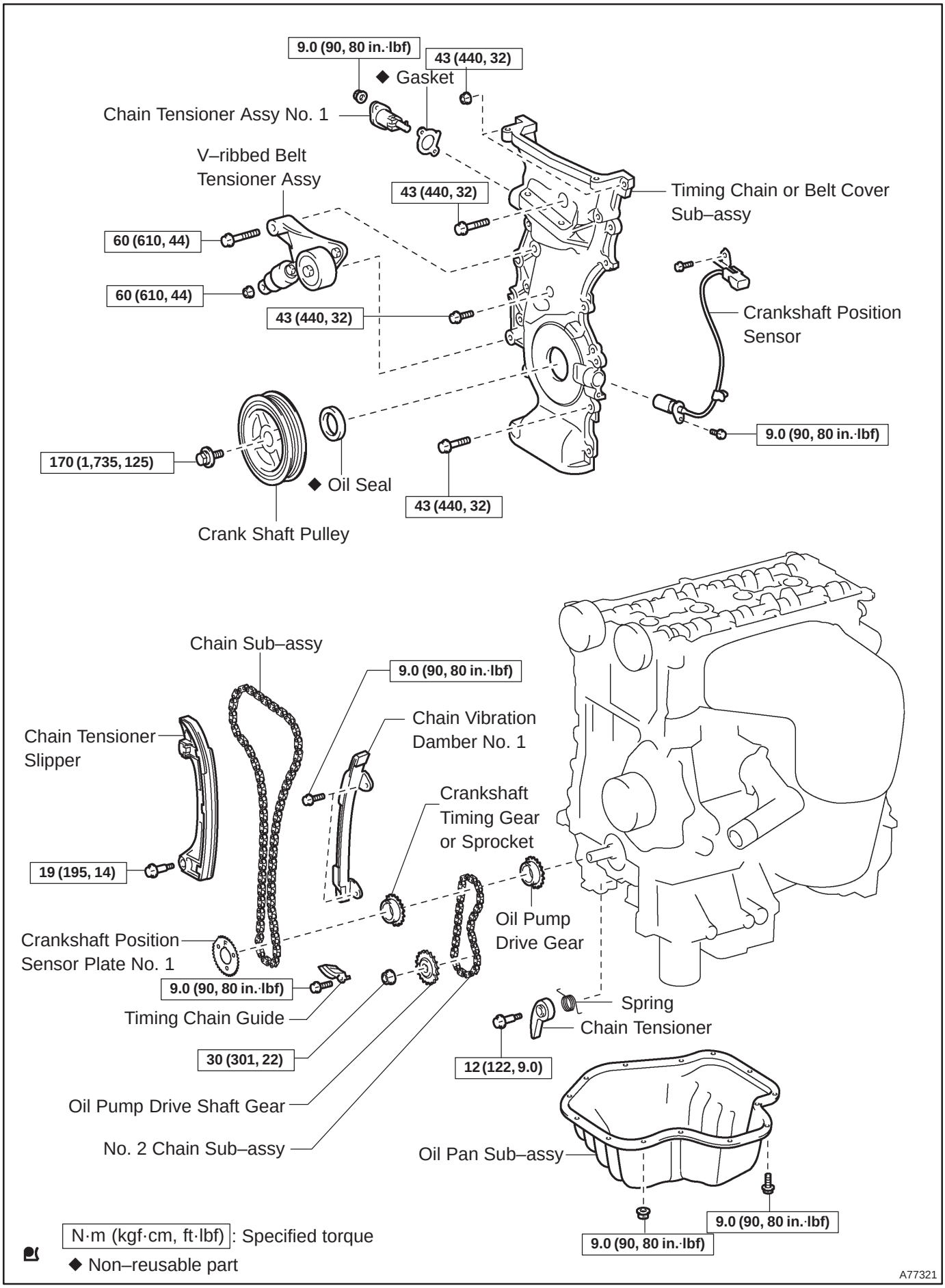


cardiagn.com

141B8–01

# REPLACEMENT

**1. REMOVE FRONT WHEEL RH**

**2. REMOVE RADIATOR SUPPORT OPENING COVER**

**3. REMOVE ENGINE ROOM COVER SIDE**

**4. REMOVE ENGINE UNDER COVER RH**

**5. REMOVE ENGINE UNDER COVER LH**

**6. DRAIN ENGINE OIL**

(a) Install a new gasket and the drain plug after draining the engine oil.
**Torque: 25 N·m (255 kgf·cm, 18 ft·lbf)**

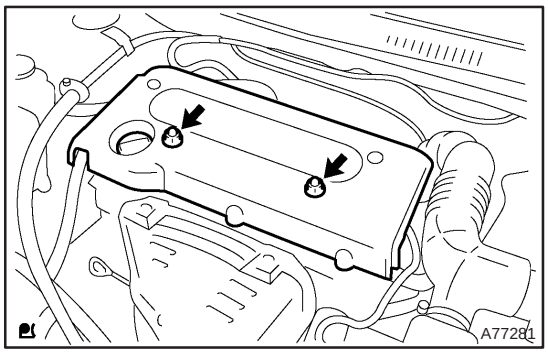


**7. REMOVE ENGINE COVER SUB–ASSY NO.1**

(a) Remove the 2 nuts and the engine cover No. 1.

**8. REMOVE FAN AND GENERATOR V BELT (See page 14–105)**
SST 09249–63010

**9. REMOVE GENERATOR ASSY (See page 19–20)**

**10. REMOVE EXHAUST PIPE ASSY FRONT (See page 15–7)**

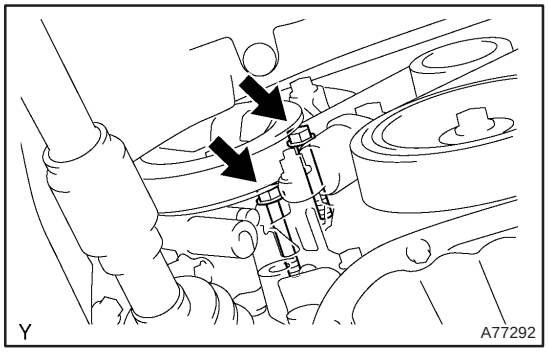


**11. SEPARATE VANE PUMP ASSY**

(a) Remove the 2 through bolts and separate the vane pump.

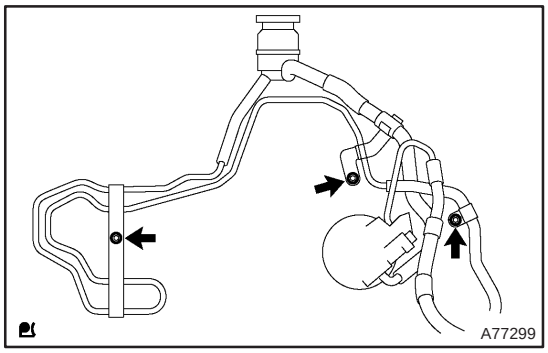


**12. SEPARATE RETURN TUBE SUB–ASSY**

(a) Remove 3 bolts and separate the return tube as shown in the illustration.

cardiagn.com

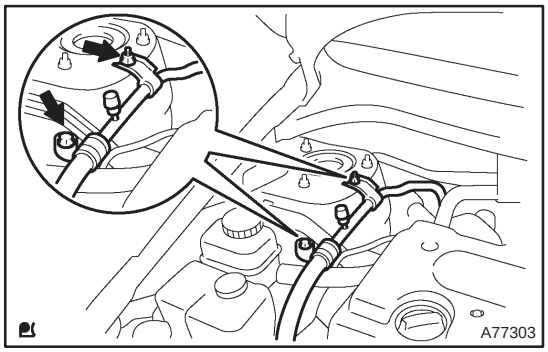


**13. SEPARATE COOLER REFRIGERANT SUCTION HOSE NO.1 (LHD(W/ AIR CONDITIONER) STEERING POSITION TYPE)**

(a) Remove the 2 nuts and separate the suction hose.

**14. SEPARATE VANE PUMP OIL RESERVOIR ASSY**

**NOTICE:**

**Do not disconnect the 2 hoses.**

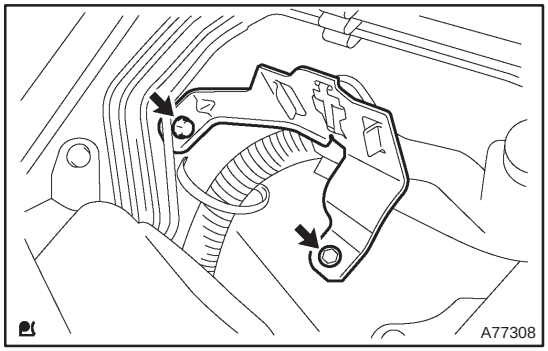


**15. REMOVE OIL RESERVOIR BRACKET NO.1**

(a) Remove the 2 bolts and the oil pump reservoir bracket No. 1.

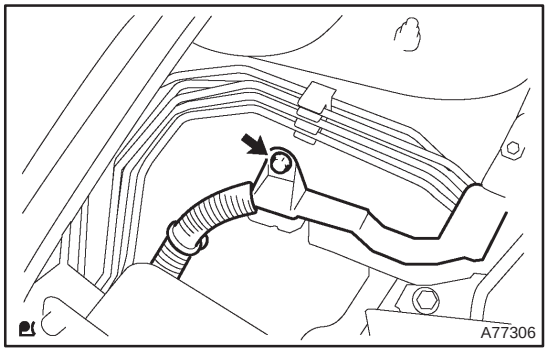


**16. SEPARATE ENGINE WIRE**

(a) Remove the bolt and separate the clamp and engine wire.

**17. REMOVE ENGINE SERVICE COVER BRACKET RH (W/O AIR CONDITIONING)**

(a) Remove the bolt and the engine service cover bracket RH.

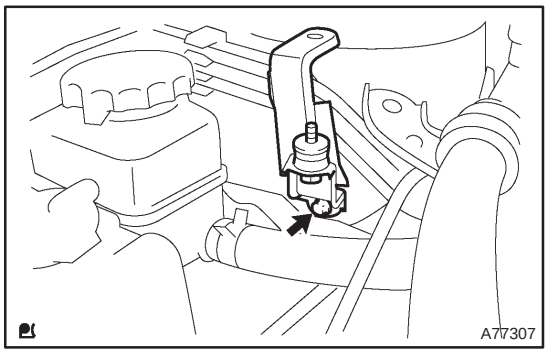


**18. REMOVE COOLER BRACKET (LHD(W/ AIR CONDITIONER) STEERING POSITION TYPE)**

(a) Remove the bolt and cooler bracket.

cardiagn.com

**19. REMOVE ENGINE SERVICE COVER BRACKET RH (RHD(W/ AIR CONDITIONER) STEERING POSITION TYPE)**

(a) Remove the bolt and the engine service cover bracket RH.

**20. REMOVE IGNITION COIL ASSY**

(a) Remove the 4 bolts and 4 ignition coils.

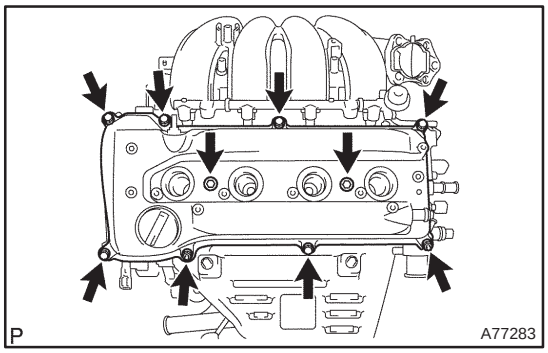


**21. REMOVE CYLINDER HEAD COVER SUB–ASSY**

(a) Disconnect the 2 PCV hoses from the cylinder head cover.

(b) Remove the 8 bolts and 2 nuts, and then remove the cylinder head cover and gasket.

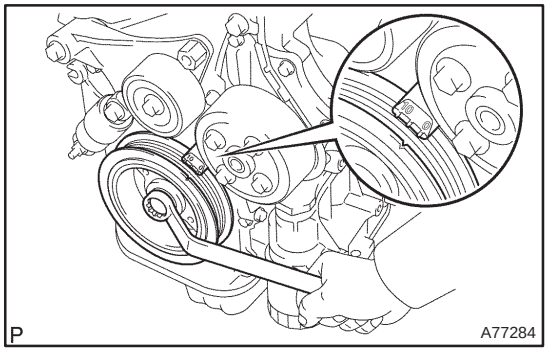


**22. SET NO. 1 CYLINDER TO TDC/COMPRESSION**

(a) Turn the crankshaft pulley, and align its timing notch with timing mark 0 of the timing chain cover.

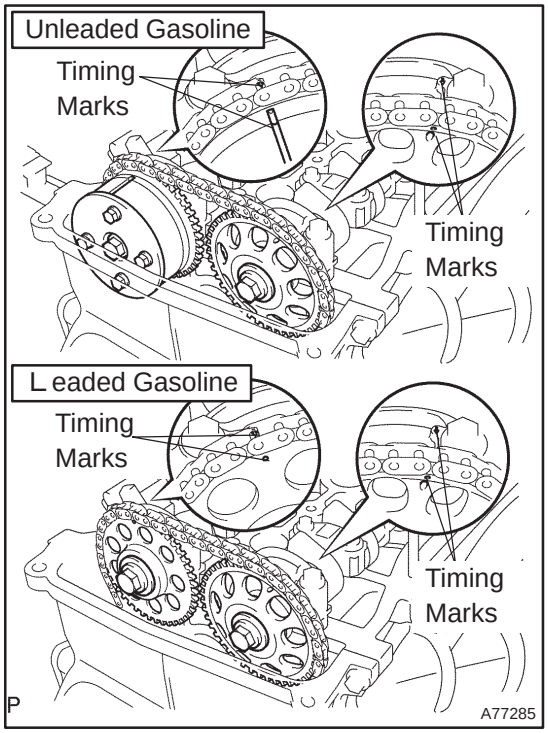


(b) Check that the timing marks of the camshaft timing gear are aligned with the timing marks located on the No. 1 and No. 2 bearing caps as shown in the illustration.

If not, turn the crankshaft 1 revolution (360°) and align the marks as above.

cardiagn.com

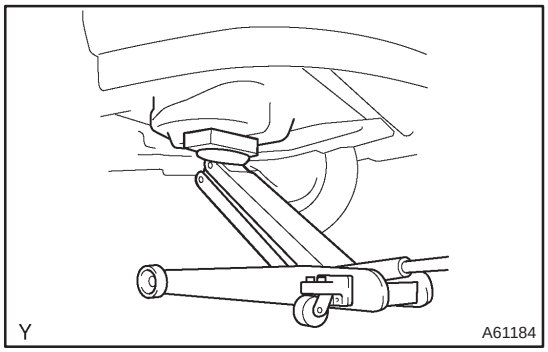


**23. REMOVE ENGINE MOUNTING BRACKET NO.2 RH**

(a) Place the jack underneath the engine, and put a wooden block on the jack.

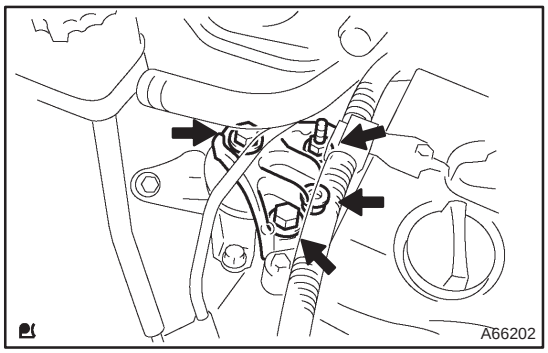


(b) Remove the 2 bolts and 2 nuts, and then detach the mounting bracket No. 2 RH.

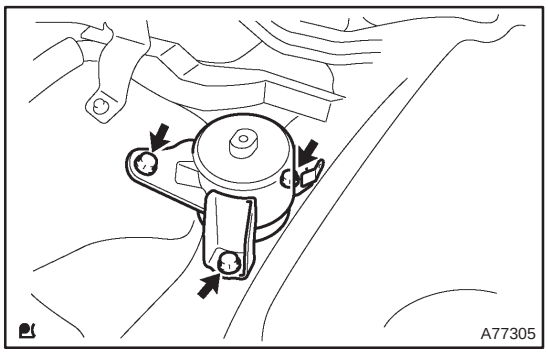


**24. REMOVE TRANSVERSE ENGINE ENGINE MOUNTING INSULATOR**

(a) Remove the 3 bolts and the engine mounting insulator.

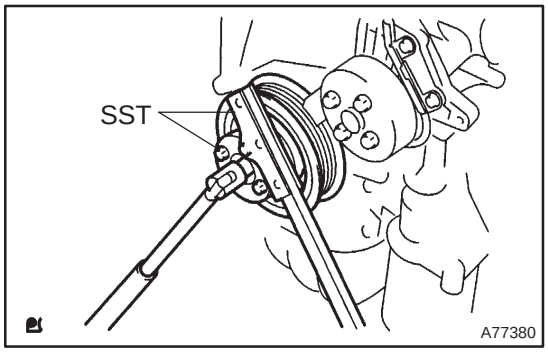


**25. REMOVE CRANKSHAFT PULLEY**

(a) Using SST, fix the crankshaft pulley and loosen a crankshaft pulley bolt.
SST 09213–54015 (91651–60855), 09330–00021

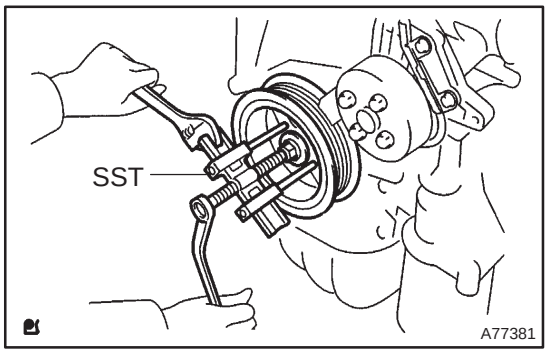


(b) Using a crankshaft pulley bolt and SST, remove the crankshaft pulley.
SST 09950–50013 (09951–05010, 09952–05010, 09953–05020, 09954–05021)

cardiagn.com

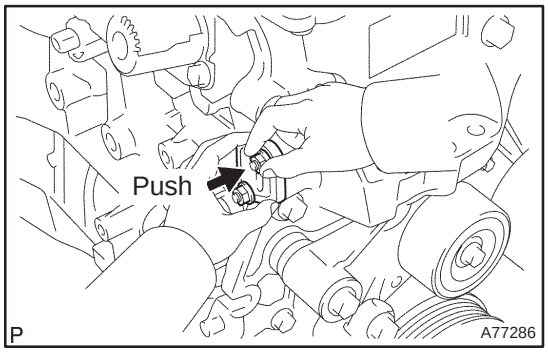


**26. REMOVE CHAIN TENSIONER ASSY NO.1**

(a) Remove the 2 nuts, the chain tensioner No. 1 and gasket.

**NOTICE:**

**Do not turn the crankshaft.**

**27. REMOVE CRANKSHAFT POSITION SENSOR**

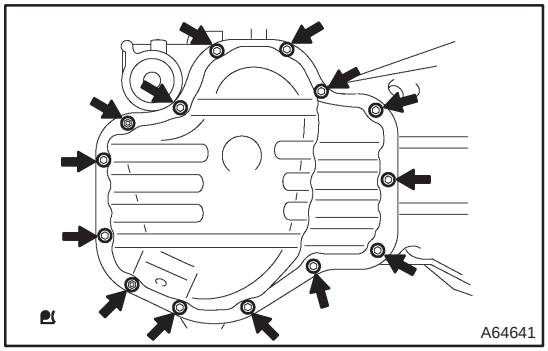


**28. REMOVE OIL PAN SUB–ASSY**

(a) Remove the 12 bolts and 2 nuts.

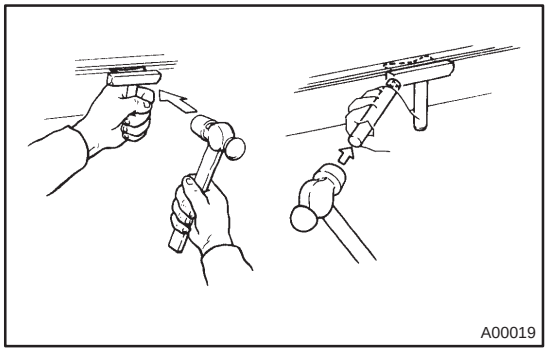


(b) Insert the blade of SST between the crank case, timing chain cover and oil pan, cut off applied sealer and remove the oil pan.

SST 09032–00100

**NOTICE:**

**Be careful not to damage the contact surface of the timing chain cover, crank case and oil pan.**

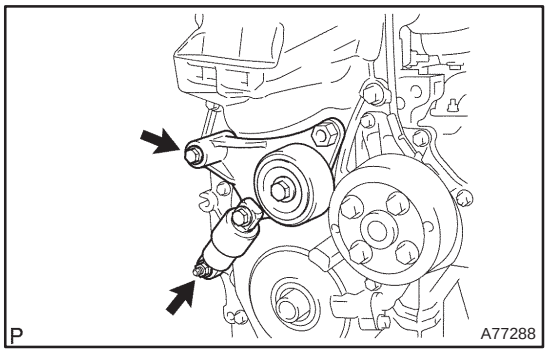


**29. REMOVE V–RIBBED BELT TENSIONER ASSY**

cardiagn.com

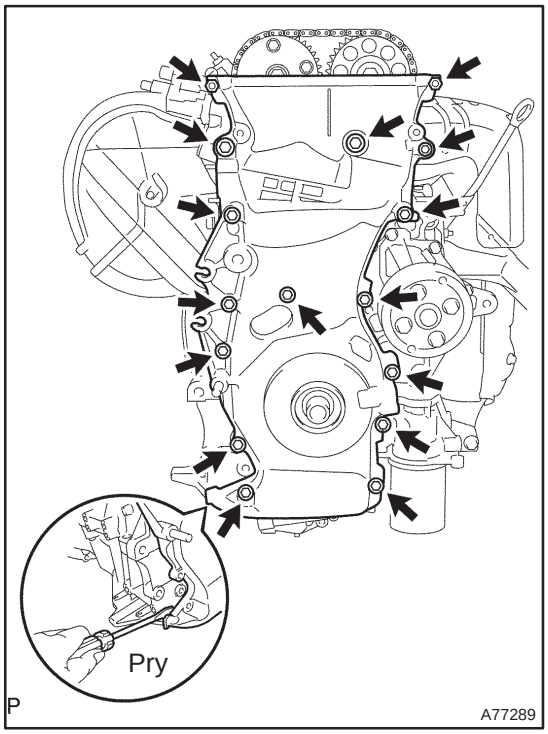


**30. REMOVE TIMING CHAIN OR BELT COVER SUB–ASSY**

(a) Remove the 14 bolts and 2 nuts.

(b) Using a screwdriver, pry between the timing chain cover and cylinder head or cylinder block.

(c) Remove the timing chain cover.

**NOTICE:**

**Be careful not to damage the contact surface of the timing chain cover, cylinder head and cylinder block.**

**31. REMOVE CRANKSHAFT POSITION SENSOR PLATE NO.1**

**32. REMOVE CHAIN TENSIONER SLIPPER**

(a) Remove the 2 bolts and the chain tensioner slipper.

**33. REMOVE CHAIN VIBRATION DAMPER NO.1**

(a) Remove the bolt and the chain vibration damper No. 1

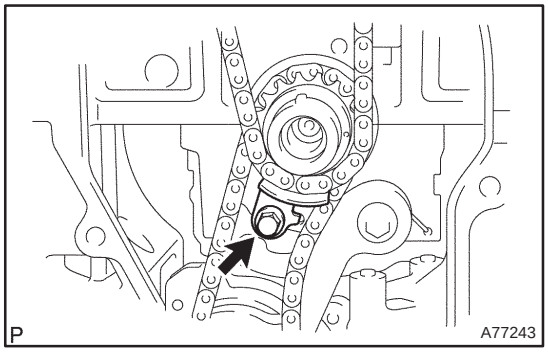


**34. REMOVE TIMING CHAIN GUIDE**

(a) Remove the bolt and the timing chain guide.

**35. REMOVE CHAIN SUB–ASSY**

**36. REMOVE CRANKSHAFT TIMING GEAR OR SPROCKET**

cardiagn.com

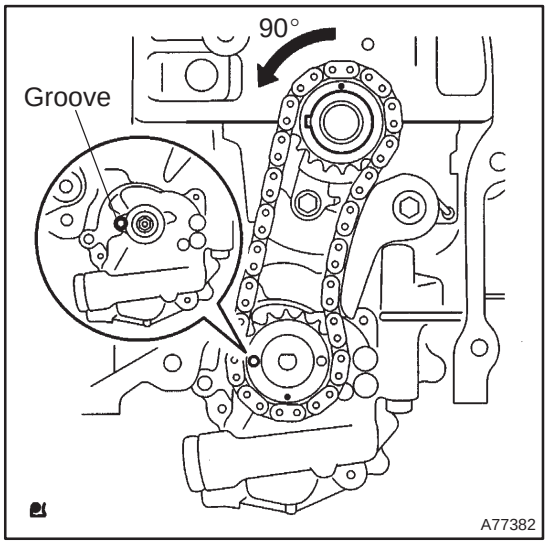


**37. REMOVE NO.2 CHAIN SUB–ASSY**

(a) Turn the crankshaft counterclockwise 90°, and align an adjusting hole of the oil pump drive shaft gear with the groove of the oil pump.

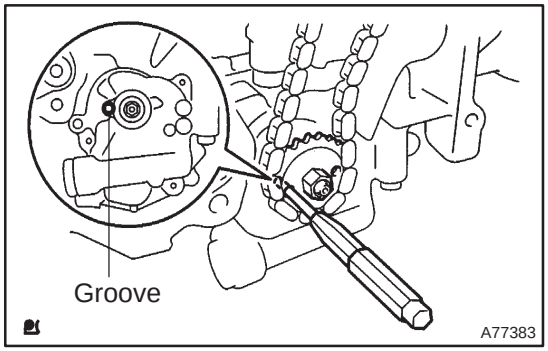


(b) Put a 4 mm diameter bar in the adjusting hole of the oil pump drive shaft gear to lock in position, and remove the nut.

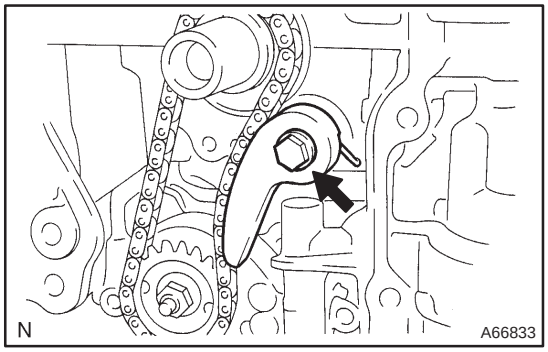


(c) Remove the bolt, and then remove the chain tensioner and spring.

(d) Remove the oil pump drive shaft gear and chain No. 2.

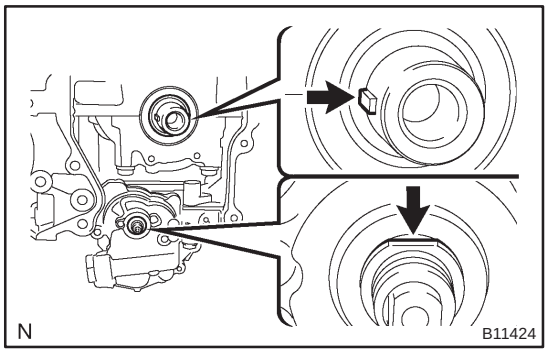


**38. INSTALL NO.2 CHAIN SUB–ASSY**

(a) Set the crankshaft key to the left side position.

(b) Orient the flat portion of the drive shaft upward.

cardiagn.com

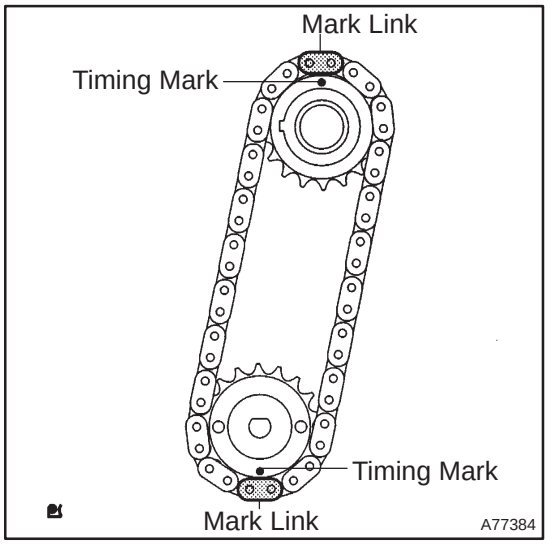


(c) Align the mark links (yellow colored links) with the timing marks of each gear as shown in the illustration.

(d) Install the gears to the crankshaft and oil pump shaft with the chain wrapped.

(e) Temporarily tighten the oil pump drive shaft gear with the nut.

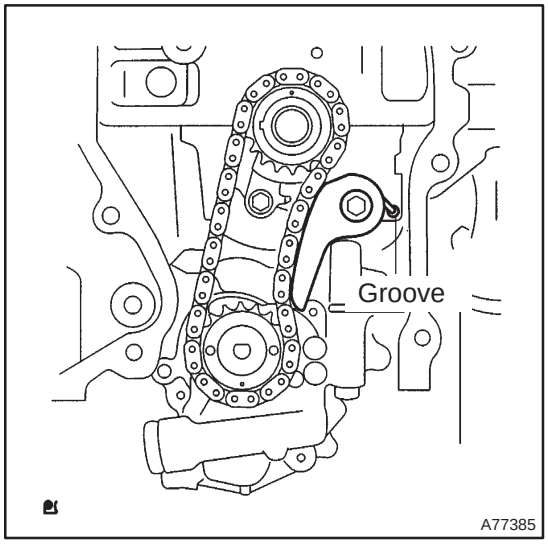


(f) Insert the damper spring into the adjusting hole, and install the chain tensioner plate with the bolt.
**Torque: 12 N·m (122 kgf·cm, 9.0 ft·lbf)**

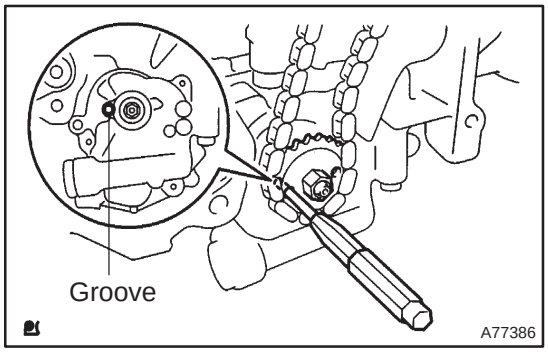


(g) Align an adjusting hole of the sprocket with the groove of the oil pump.

(h) Insert a 4 mm diameter bar into the adjusting hole of the sprocket to lock in position, and tighten the nut.
**Torque: 30 N·m (301 kgf·cm, 22 ft·lbf)**

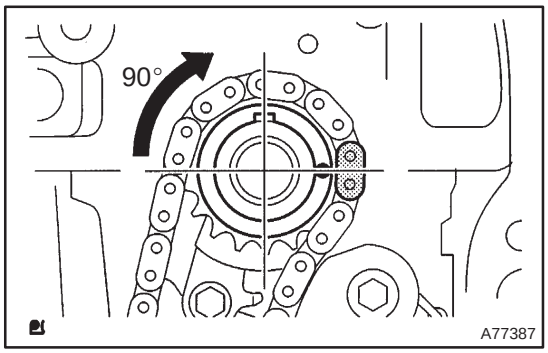


(i) Rotate the crankshaft clockwise 90°, and position the crankshaft key upward.

cardiagn.com

## 39. INSTALL CRANKSHAFT TIMING GEAR OR SPROCKET

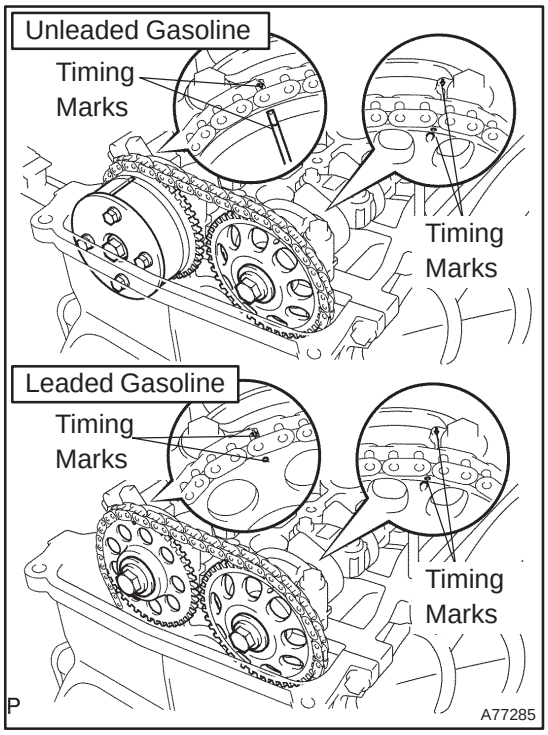


**40. SET NO. 1 CYLINDER TO TDC/COMPRESSION**

(a) Turn the camshafts with a wrench on the hexagonal lobe, and align the timing marks of the camshaft timing gear with each timing mark located on the No. 1 and No. 2 bearing caps as shown in the illustration.

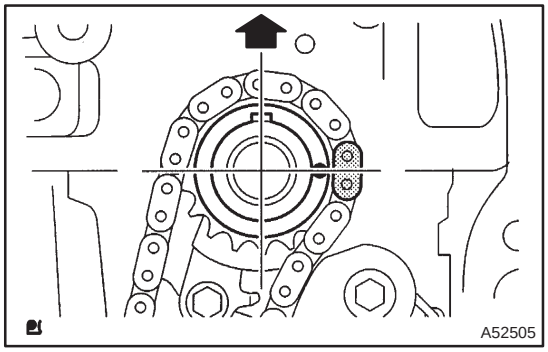


(b) Using the crankshaft pulley bolt, turn the crankshaft and position the key on the crankshaft upward.

## 41. INSTALL CHAIN VIBRATION DAMPER NO.1

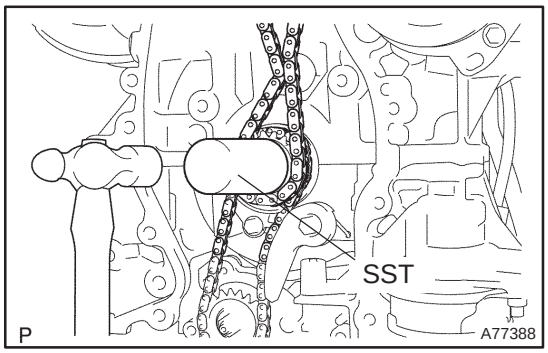


**42. INSTALL CHAIN SUB–ASSY**

cardiagn.com

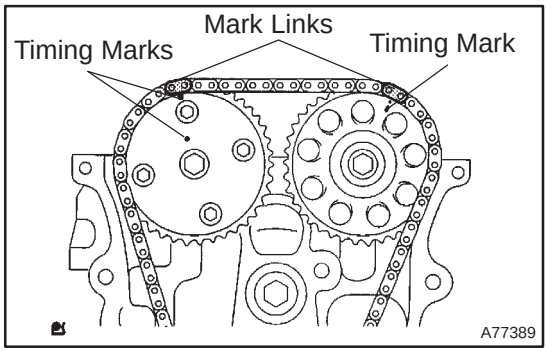


(a) Align the mark links (gold or yellow colored links) with each timing mark located on the camshaft timing gears, and install the chain.

**43. INSTALL TIMING CHAIN GUIDE**
**Torque: 9.0 N·m (92 kgf·cm, 80 in.·lbf)**

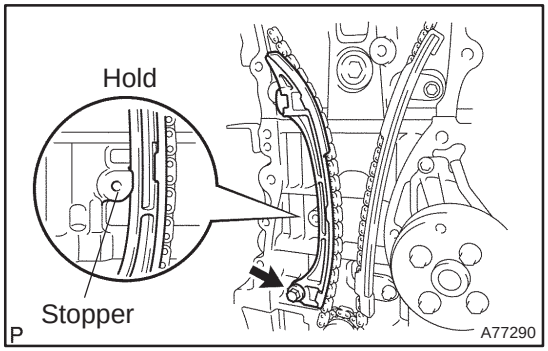


**44. INSTALL CHAIN TENSIONER SLIPPER**

(a) Install the chain tensioner slipper with the bolt.
**Torque: 19 N·m (195 kgf·cm, 14 ft·lbf)**

(b) Check that the chain tensioner slipper is hold on the cylinder block stopper.

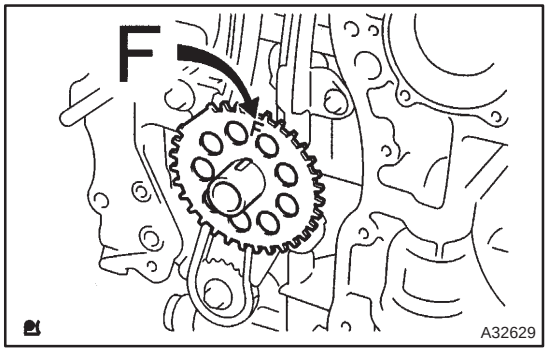


**45. INSTALL CRANKSHAFT POSITION SENSOR PLATE NO.1**

(a) Install the plate with the ”F” mark facing forward.

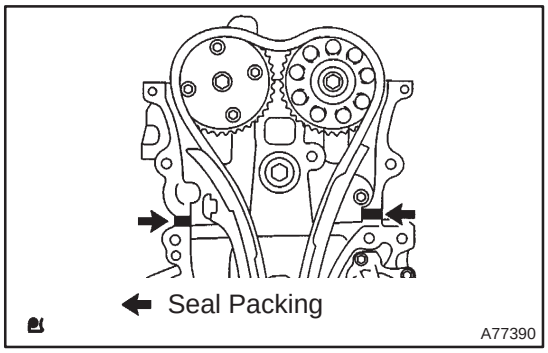


**46. INSTALL TIMING CHAIN OR BELT COVER SUB–ASSY**

**NOTICE:**

- **Remove any oil from the contact surface.**
- **Install the chain cover within 3 minutes after applying seal packing.**
- **Do not start the engine within 2 hours after installing.**

(a) Remove any old packing (FIPG) material and be careful not to drop any oil on the contact surfaces of the timing chain cover.

(b) Apply a continuous bead (Diameter 2 mm (0.09 in.)) of seal packing as shown in the illustration.
**Seal packing: Part No. 08826 – 00080 or equivalent.**

cardiagn.com

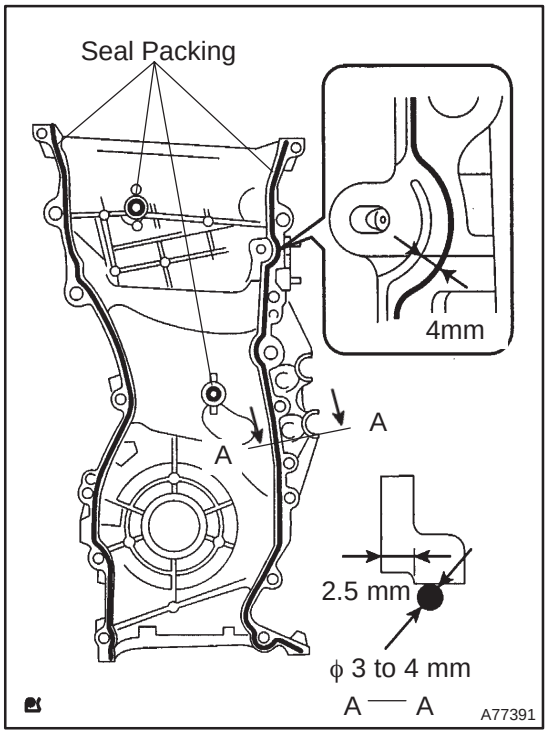


(c) Apply a continuous bead (Diameter 3 to 4 mm (0.118 to 0.157 in.)) of seal packing as shown in the illustration.
**Seal packing: Part No. 08826 – 00080 or equivalent**

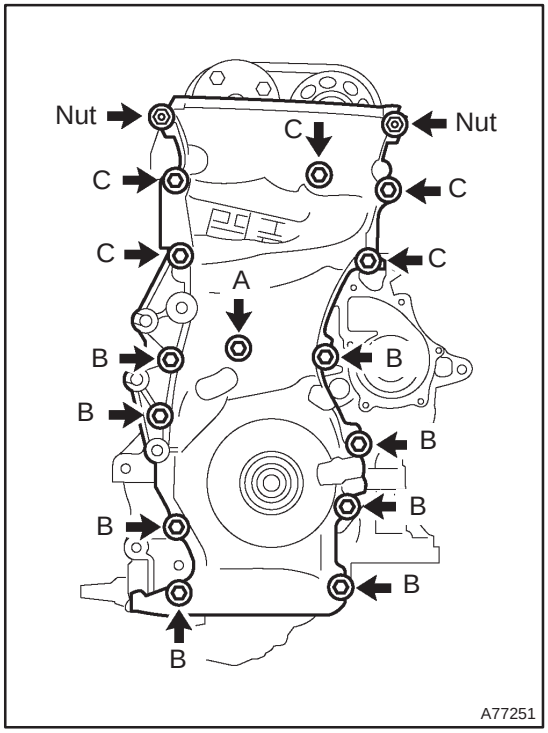


(d) Install the timing chain cover with the 14 bolts and 2 nuts.
**Torque:**
**Bolt A 9.0 N·m (92 kgf·cm, 80 in.·lbf)**
**Bolt B 21 N·m (214 kgf·cm, 15 ft·lbf)**
**Bolt C 43 N·m (438 kgf·cm, 32 ft·lbf)**
**Nut 9.0 N·m (92 kgf·cm, 80 in.·lbf)**

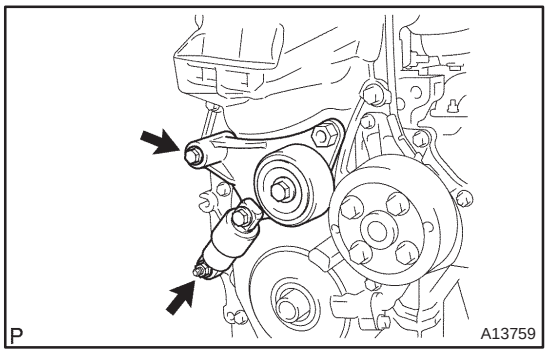


**47. INSTALL V–RIBBED BELT TENSIONER ASSY**

(a) Install the V–ribbed belt tensioner with the bolt and nut.
**Torque: 60 N·m (610 kgf·cm, 44 ft·lbf)**

**NOTICE:**
**As the drive tensioner should be fastened together with the timing chain cover, so be sure install it within 15 minutes after the timing chain cover is installed.**

cardiagn.com

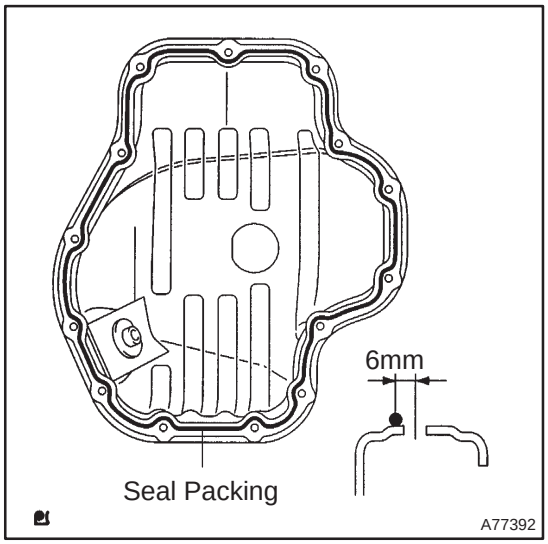


**48. INSTALL OIL PAN SUB–ASSY**

**NOTICE:**

- **Remove any oil from the contact surface.**
- **Install the oil pan within 3 minutes after applying seal packing.**
- **Do not start the engine within 2 hours after installing.**

(a) Remove any old packing (FIPG) material and be careful not to drop any oil on the contact surface of the cylinder block and oil pan.

(b) Apply a continuous bead (Diameter 3 mm to 4 mm (0.157 in.)) of seal packing as shown in the illustration, and install the oil pan.
**Seal packing: part No. 08826 – 00080 or equivalent**

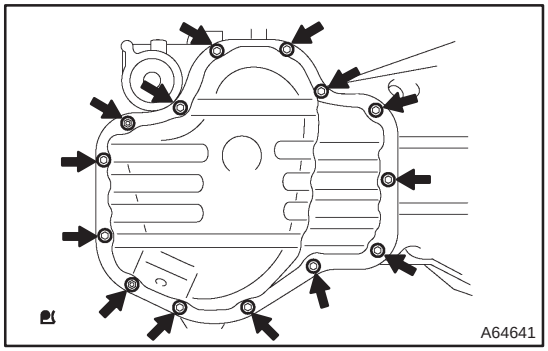


(c) Install the oil pan with the 12 bolts and 2 nuts.
**Torque: 9.0 N·m (92 kgf·cm, 80 in.·lbf)**

**49. INSTALL CRANKSHAFT POSITION SENSOR**

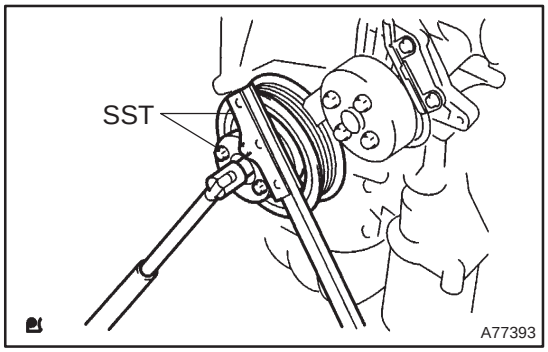


**50. INSTALL CRANKSHAFT PULLEY**

(a) Using SST, tighten the set bolt.
SST 09213–54015 (91651–60855), 09330–00021
**Torque: 170 N·m (1,733 kgf·cm, 125 ft·lbf)**

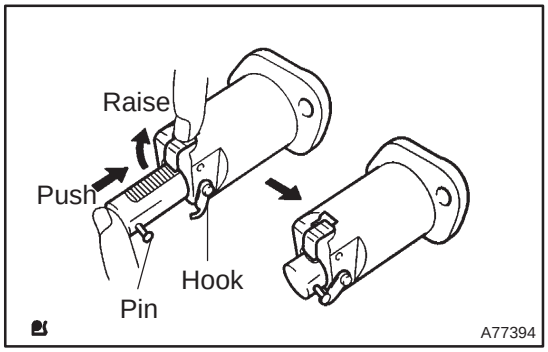


**51. INSTALL CHAIN TENSIONER ASSY NO.1**

(a) Release the ratchet pawl, fully push in the plunger and apply the hook to the pin so that the plunger is located in position.

cardiagn.com

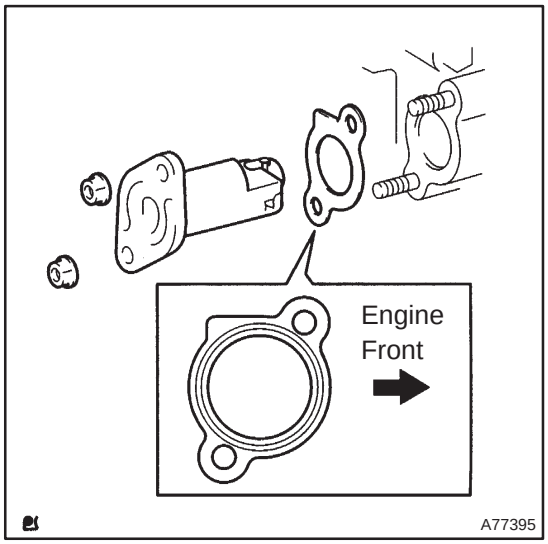


(b) Install a new gasket chain tensioner with the 2 nuts.
**Torque: 9.0 N·m (92 kgf·cm, 80 in.·lbf)**

**NOTICE:**
**If the hook is released wile inserting, apply the hook again, and insert the chain tensioner.**

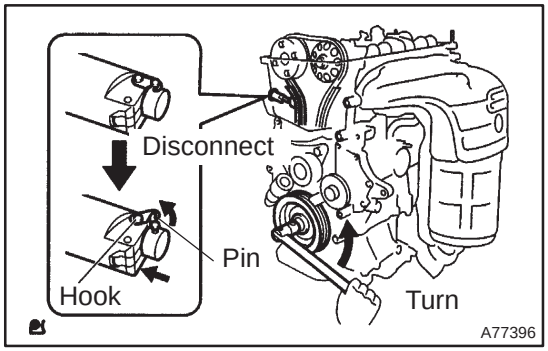


(c) Turn the crankshaft counterclockwise, and check that the hook is disengaged from the plunger knock pin.

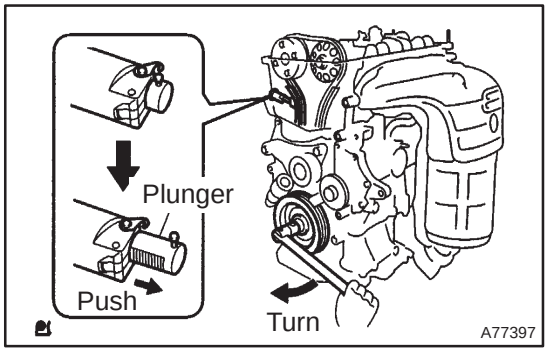


(d) Turn the crankshaft clockwise, and check that the plunger is extended.

**52. INSTALL TRANSVERSE ENGINE ENGINE MOUNTING INSULATOR**
**Torque: 52 N·m (530 kgf·cm, 38 ft·lbf)**

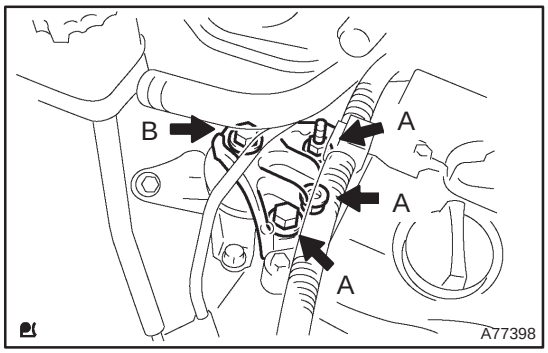


**53. INSTALL ENGINE MOUNTING BRACKET NO.2 RH**
**Torque:**
**A 52 N·m (530 kgf·cm, 38 ft·lbf)**
**B 113 N·m (1,152 kgf·cm, 83 ft·lbf)**

**54. INSTALL CYLINDER HEAD COVER SUB–ASSY**

(a) Remove any old seal packing (FIPG) material.

cardiagn.com

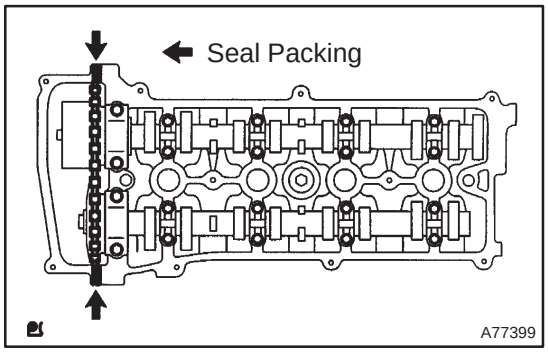


(b) Apply seal packing to the 2 locations as shown in the illustration.
**Seal Packing: Part No. 08826–00080 or equivalent**

**NOTICE:**

- **Remove any oil from the contact surface.**
- **Install the cylinder head cover within 5 minutes after applying seal packing.**
- **Do not expose the seal to engine oil 2 hours after installing.**

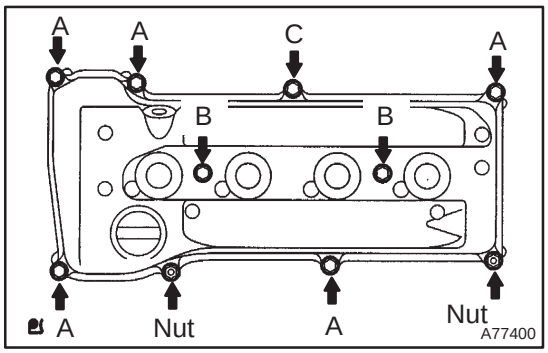


(c) install the cylinder head cover with the 8 bolts and 2 nuts.
**Torque:**
**Bolt A 11 N·m (112 kgf·cm, 8 ft·lbf)**
**Bolt B 14 N·m (143 kgf·cm, 10 ft·lbf)**
**Bolt C 21 N·m (214 kgf·cm, 15 ft·lbf)**
**Nut 11 N·m (112 kgf·cm, 8 ft·lbf)**

**55. INSTALL ENGINE SERVICE COVER BRACKET RH (W/O AIR CONDITIONING)**
**Torque: 9.0 N·m (92 kgf·cm, 80 in.·lbf)**
**56. INSTALL COOLER BRACKET (LHD(W/ AIR CONDITIONER) STEERING POSITION TYPE)**
**Torque: 9.0 N·m (92 kgf·cm, 80 in.·lbf)**
**57. INSTALL ENGINE SERVICE COVER BRACKET RH (RHD(W/ AIR CONDITIONER) STEERING POSITION TYPE)**
**Torque: 9.0 N·m (92 kgf·cm, 80 in.·lbf)**
**58. INSTALL ENGINE WIRE**
**Torque: 7.0 N·m (71 kgf·cm, 62 in.·lbf)**
**59. INSTALL OIL RESERVOIR BRACKET NO.1**
**Torque: 8.0 N·m (82 kgf·cm, 71 in.·lbf)**
**60. INSTALL COOLER REFRIGERANT SUCTION HOSE NO.1 (LHD(W/ AIR CONDITIONER) STEERING POSITION TYPE)**
**61. INSTALL RETURN TUBE SUB–ASSY**
**Torque: 8.0 N·m (82 kgf·cm, 71 in.·lbf)**
**62. INSTALL IGNITION COIL ASSY**
**Torque: 9.0 N·m (92 kgf·cm, 80 in.·lbf)**
**63. INSTALL VANE PUMP ASSY**
**Torque: 37 N·m (377 kgf·cm, 27 ft·lbf)**
**64. INSTALL EXHAUST PIPE ASSY FRONT (See page 15–7)**
**65. INSTALL GENERATOR ASSY (See page 19–20)**
**66. INSTALL FAN AND GENERATOR V BELT (See page 14–105)**
SST 09249–63010
**67. ADD ENGINE OIL**
**68. CHECK FOR ENGINE OIL LEAKS**
**69. INSTALL ENGINE COVER SUB–ASSY NO.1**
**Torque: 7.0 N·m (71 kgf·cm, 62 in.·lbf)**
**70. INSTALL FRONT WHEEL RH**
**Torque: 103 N·m (1,050 kgf·cm, 76 ft·lbf)**

cardiagn.com

141B8–01

# REPLACEMENT

**1. REMOVE FRONT WHEEL RH**

**2. REMOVE RADIATOR SUPPORT OPENING COVER**

**3. REMOVE ENGINE ROOM COVER SIDE**

**4. REMOVE ENGINE UNDER COVER RH**

**5. REMOVE ENGINE UNDER COVER LH**

**6. DRAIN ENGINE OIL**

(a) Install a new gasket and the drain plug after draining the engine oil.
**Torque: 25 N·m (255 kgf·cm, 18 ft·lbf)**

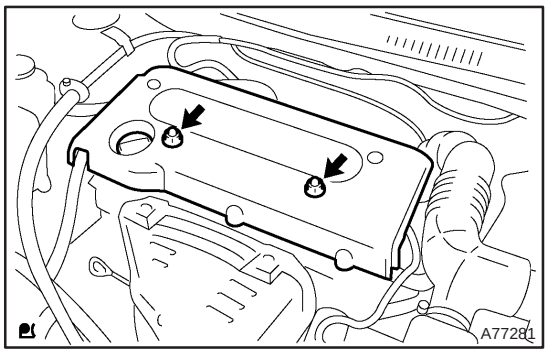


**7. REMOVE ENGINE COVER SUB–ASSY NO.1**

(a) Remove the 2 nuts and the engine cover No. 1.

**8. REMOVE FAN AND GENERATOR V BELT (See page 14–105)**
SST 09249–63010

**9. REMOVE GENERATOR ASSY (See page 19–20)**

**10. REMOVE EXHAUST PIPE ASSY FRONT (See page 15–7)**

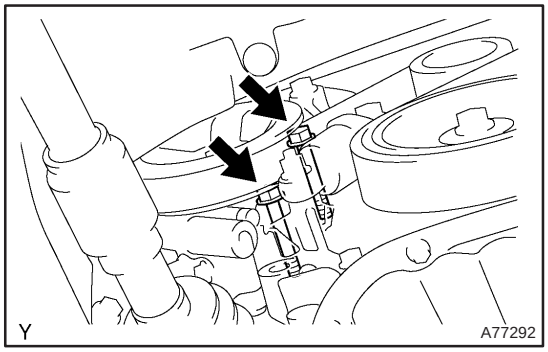


**11. SEPARATE VANE PUMP ASSY**

(a) Remove the 2 through bolts and separate the vane pump.

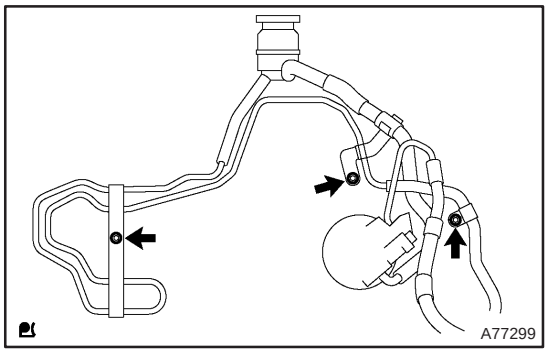


**12. SEPARATE RETURN TUBE SUB–ASSY**

(a) Remove 3 bolts and separate the return tube as shown in the illustration.

cardiagn.com

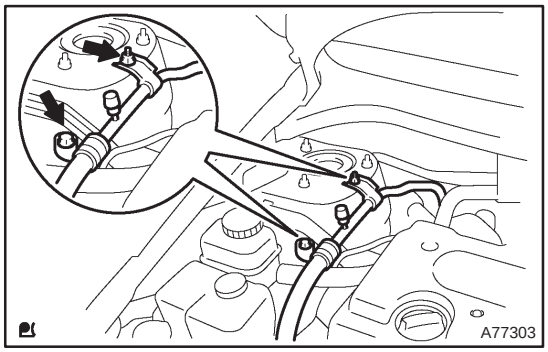


**13. SEPARATE COOLER REFRIGERANT SUCTION HOSE NO.1 (LHD(W/ AIR CONDITIONER) STEERING POSITION TYPE)**

(a) Remove the 2 nuts and separate the suction hose.

**14. SEPARATE VANE PUMP OIL RESERVOIR ASSY**

**NOTICE:**

**Do not disconnect the 2 hoses.**

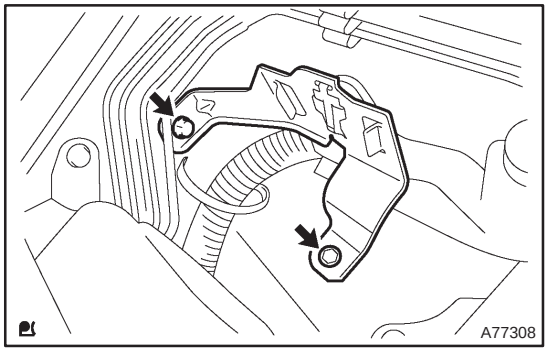


**15. REMOVE OIL RESERVOIR BRACKET NO.1**

(a) Remove the 2 bolts and the oil pump reservoir bracket No. 1.

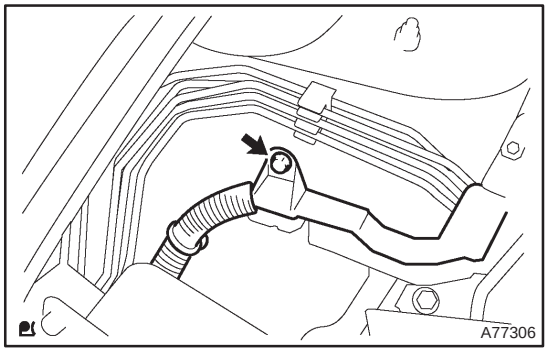


**16. SEPARATE ENGINE WIRE**

(a) Remove the bolt and separate the clamp and engine wire.

**17. REMOVE ENGINE SERVICE COVER BRACKET RH (W/O AIR CONDITIONING)**

(a) Remove the bolt and the engine service cover bracket RH.

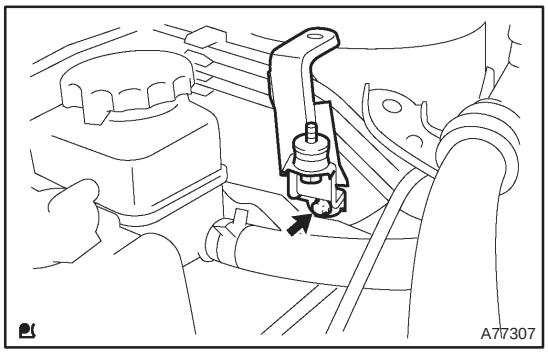


**18. REMOVE COOLER BRACKET (LHD(W/ AIR CONDITIONER) STEERING POSITION TYPE)**

(a) Remove the bolt and cooler bracket.

cardiagn.com

**19. REMOVE ENGINE SERVICE COVER BRACKET RH (RHD(W/ AIR CONDITIONER) STEERING POSITION TYPE)**

(a) Remove the bolt and the engine service cover bracket RH.

**20. REMOVE IGNITION COIL ASSY**

(a) Remove the 4 bolts and 4 ignition coils.

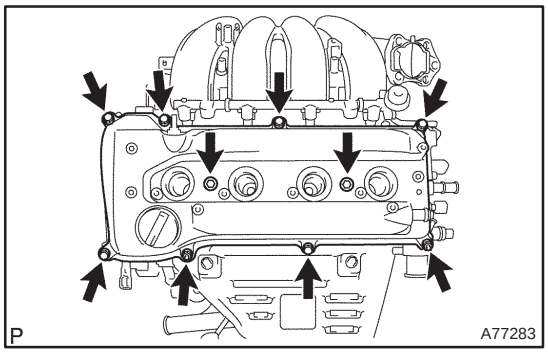


**21. REMOVE CYLINDER HEAD COVER SUB–ASSY**

(a) Disconnect the 2 PCV hoses from the cylinder head cover.

(b) Remove the 8 bolts and 2 nuts, and then remove the cylinder head cover and gasket.

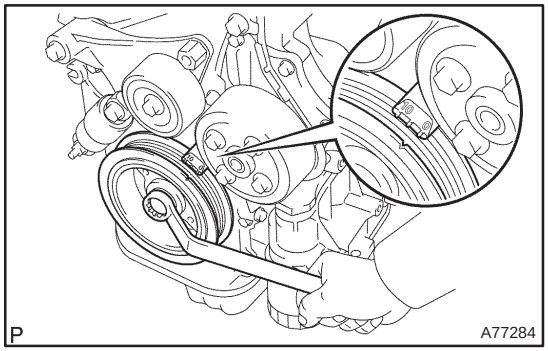


**22. SET NO. 1 CYLINDER TO TDC/COMPRESSION**

(a) Turn the crankshaft pulley, and align its timing notch with timing mark 0 of the timing chain cover.

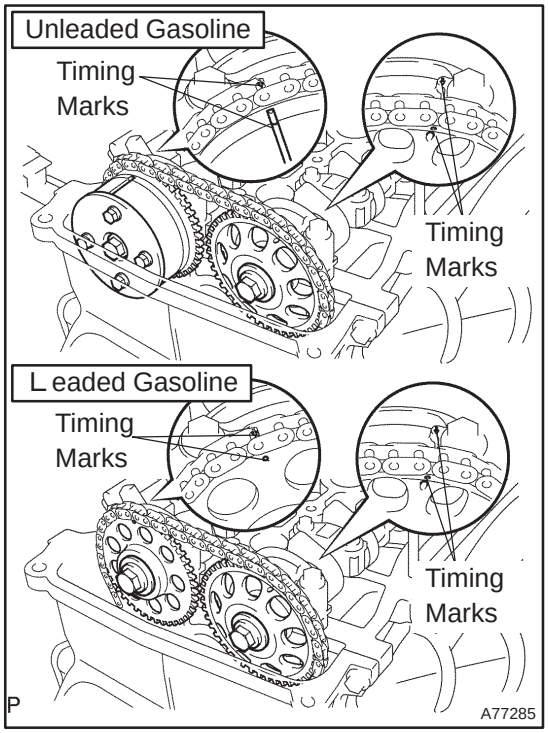


(b) Check that the timing marks of the camshaft timing gear are aligned with the timing marks located on the No. 1 and No. 2 bearing caps as shown in the illustration.

If not, turn the crankshaft 1 revolution (360°) and align the marks as above.

cardiagn.com

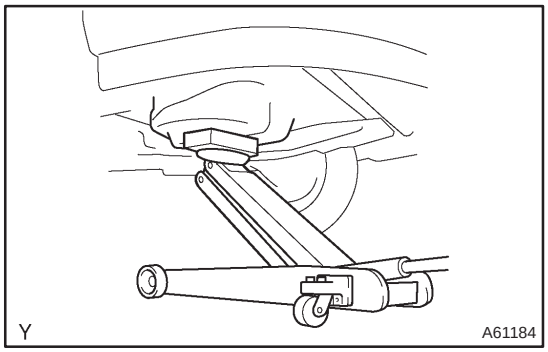


**23. REMOVE ENGINE MOUNTING BRACKET NO.2 RH**

(a) Place the jack underneath the engine, and put a wooden block on the jack.

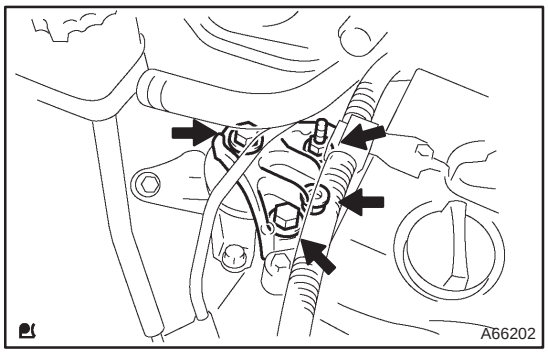


(b) Remove the 2 bolts and 2 nuts, and then detach the mounting bracket No. 2 RH.

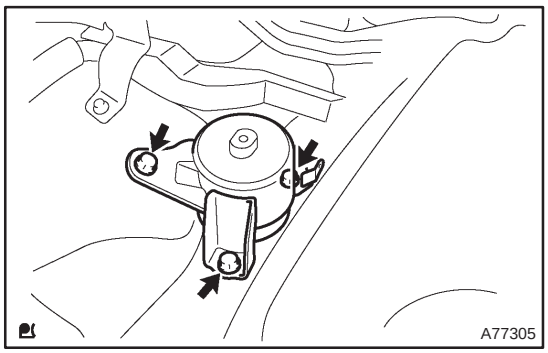


**24. REMOVE TRANSVERSE ENGINE ENGINE MOUNTING INSULATOR**

(a) Remove the 3 bolts and the engine mounting insulator.

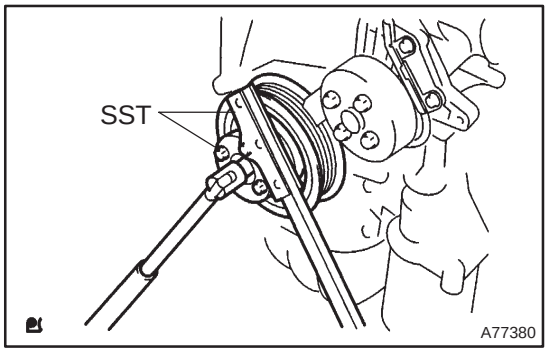


**25. REMOVE CRANKSHAFT PULLEY**

(a) Using SST, fix the crankshaft pulley and loosen a crankshaft pulley bolt.
SST 09213–54015 (91651–60855), 09330–00021

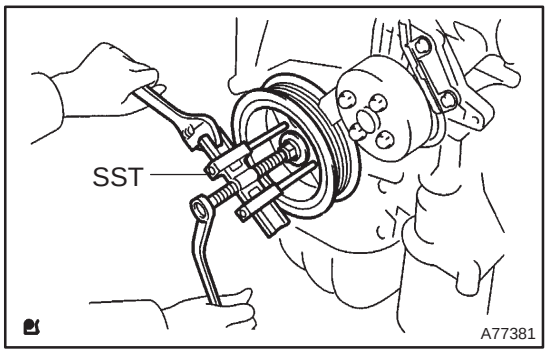


(b) Using a crankshaft pulley bolt and SST, remove the crankshaft pulley.
SST 09950–50013 (09951–05010, 09952–05010, 09953–05020, 09954–05021)

cardiagn.com

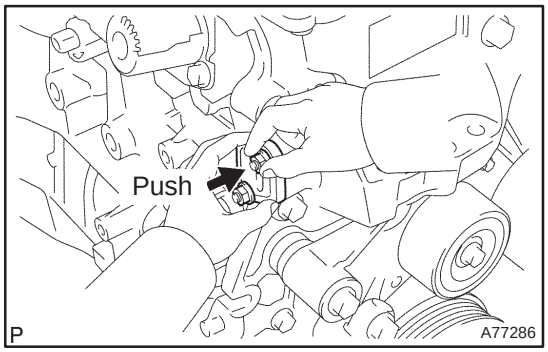


**26. REMOVE CHAIN TENSIONER ASSY NO.1**

(a) Remove the 2 nuts, the chain tensioner No. 1 and gasket.

**NOTICE:**

**Do not turn the crankshaft.**

**27. REMOVE CRANKSHAFT POSITION SENSOR**

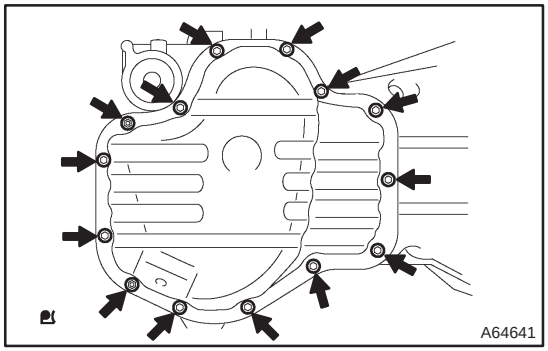


**28. REMOVE OIL PAN SUB–ASSY**

(a) Remove the 12 bolts and 2 nuts.

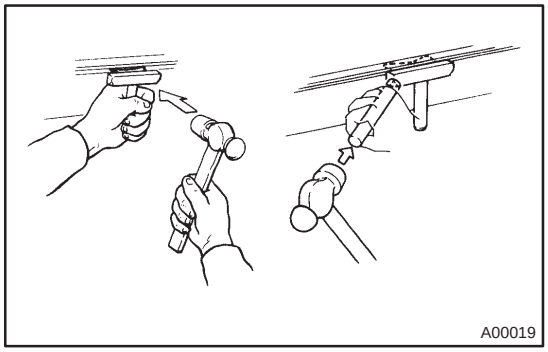


(b) Insert the blade of SST between the crank case, timing chain cover and oil pan, cut off applied sealer and remove the oil pan.

SST 09032–00100

**NOTICE:**

**Be careful not to damage the contact surface of the timing chain cover, crank case and oil pan.**

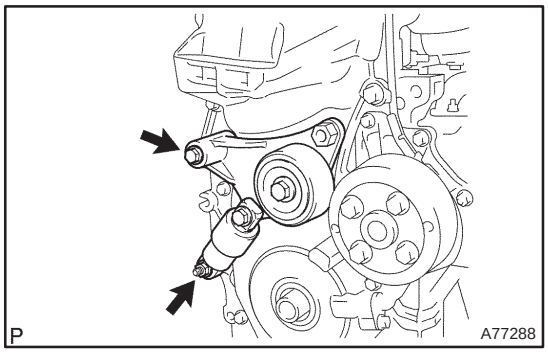


**29. REMOVE V–RIBBED BELT TENSIONER ASSY**

cardiagn.com

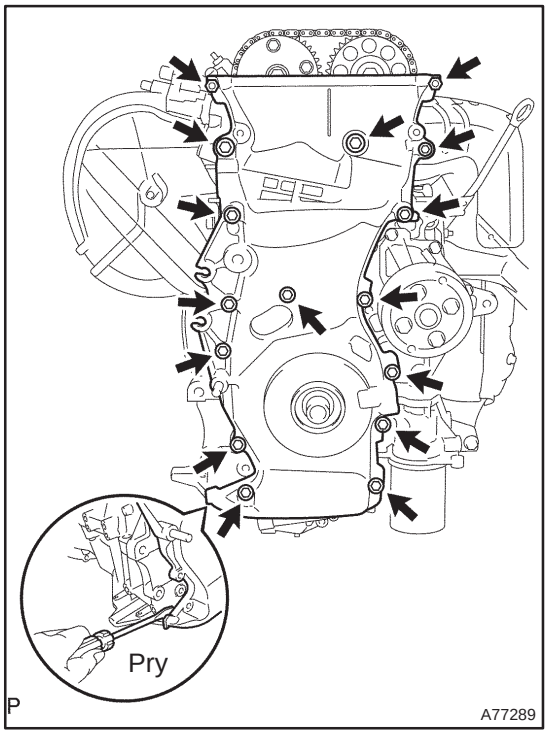


**30. REMOVE TIMING CHAIN OR BELT COVER SUB–ASSY**

(a) Remove the 14 bolts and 2 nuts.

(b) Using a screwdriver, pry between the timing chain cover and cylinder head or cylinder block.

(c) Remove the timing chain cover.

**NOTICE:**

**Be careful not to damage the contact surface of the timing chain cover, cylinder head and cylinder block.**

**31. REMOVE CRANKSHAFT POSITION SENSOR PLATE NO.1**

**32. REMOVE CHAIN TENSIONER SLIPPER**

(a) Remove the 2 bolts and the chain tensioner slipper.

**33. REMOVE CHAIN VIBRATION DAMPER NO.1**

(a) Remove the bolt and the chain vibration damper No. 1

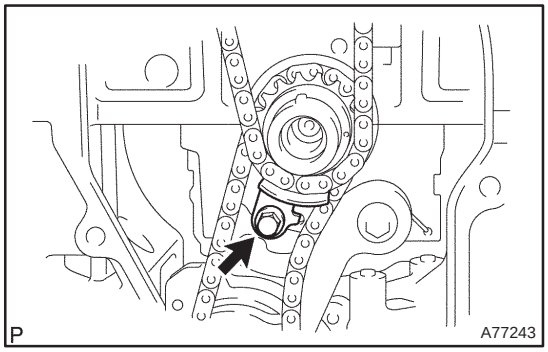


**34. REMOVE TIMING CHAIN GUIDE**

(a) Remove the bolt and the timing chain guide.

**35. REMOVE CHAIN SUB–ASSY**

**36. REMOVE CRANKSHAFT TIMING GEAR OR SPROCKET**

cardiagn.com

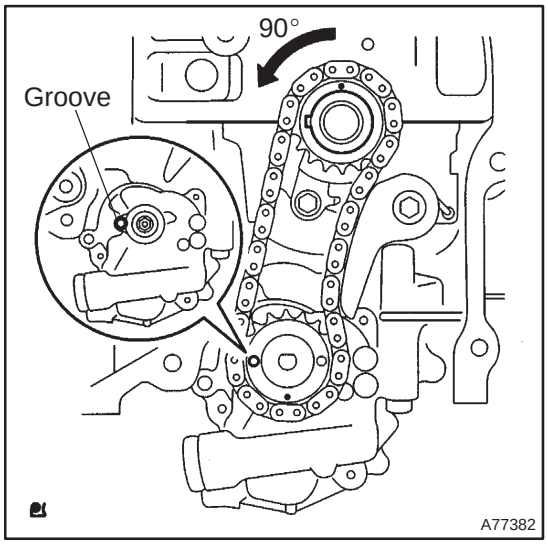


**37. REMOVE NO.2 CHAIN SUB–ASSY**

(a) Turn the crankshaft counterclockwise 90°, and align an adjusting hole of the oil pump drive shaft gear with the groove of the oil pump.

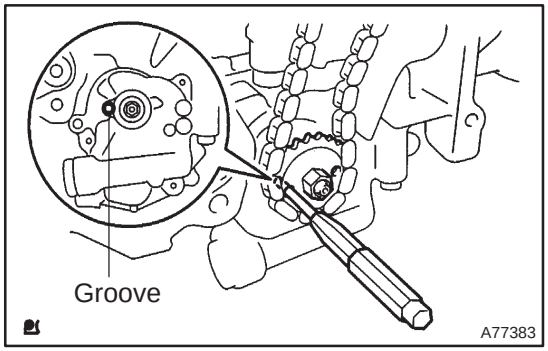


(b) Put a 4 mm diameter bar in the adjusting hole of the oil pump drive shaft gear to lock in position, and remove the nut.

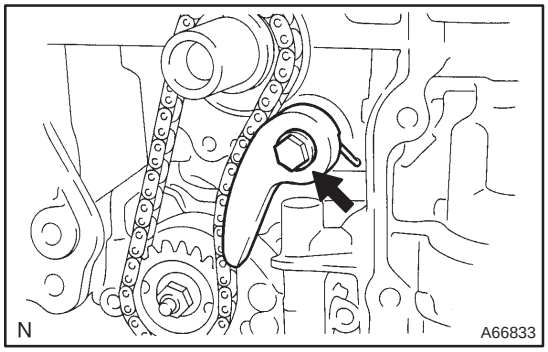


(c) Remove the bolt, and then remove the chain tensioner and spring.

(d) Remove the oil pump drive shaft gear and chain No. 2.

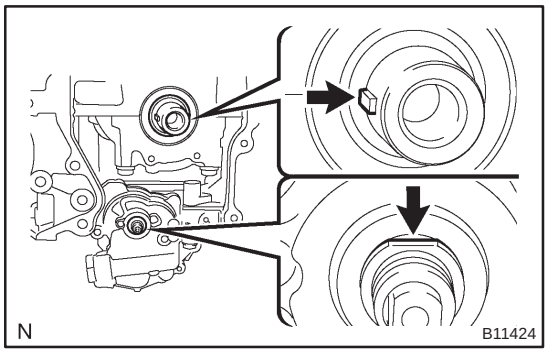


**38. INSTALL NO.2 CHAIN SUB–ASSY**

(a) Set the crankshaft key to the left side position.

(b) Orient the flat portion of the drive shaft upward.

cardiagn.com

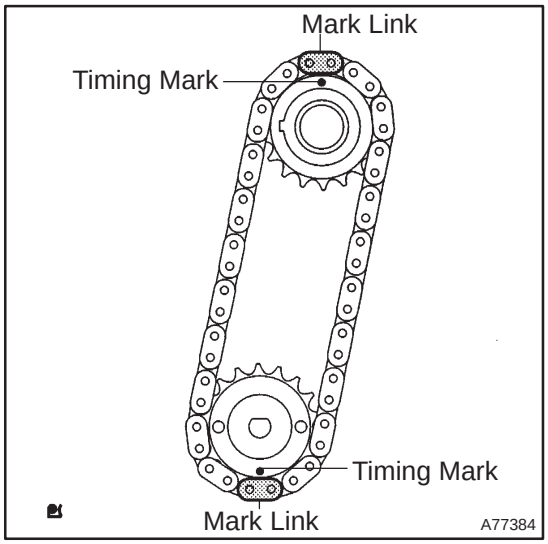


(c) Align the mark links (yellow colored links) with the timing marks of each gear as shown in the illustration.

(d) Install the gears to the crankshaft and oil pump shaft with the chain wrapped.

(e) Temporarily tighten the oil pump drive shaft gear with the nut.

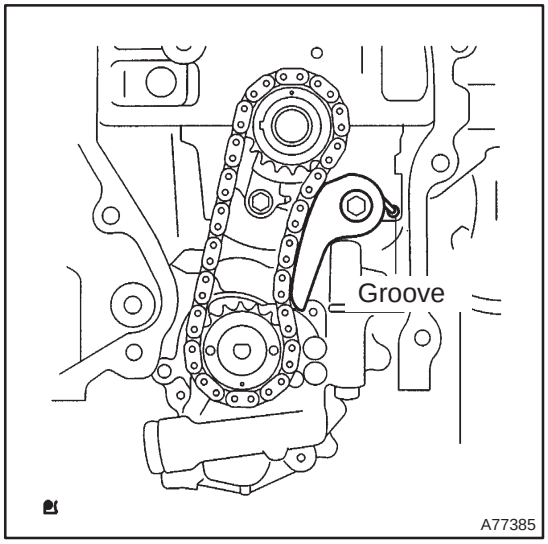


(f) Insert the damper spring into the adjusting hole, and install the chain tensioner plate with the bolt.
**Torque: 12 N·m (122 kgf·cm, 9.0 ft·lbf)**

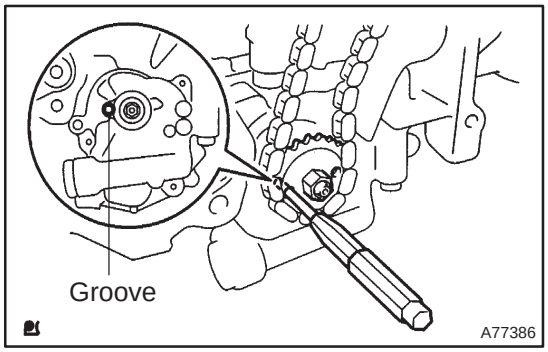


(g) Align an adjusting hole of the sprocket with the groove of the oil pump.

(h) Insert a 4 mm diameter bar into the adjusting hole of the sprocket to lock in position, and tighten the nut.
**Torque: 30 N·m (301 kgf·cm, 22 ft·lbf)**

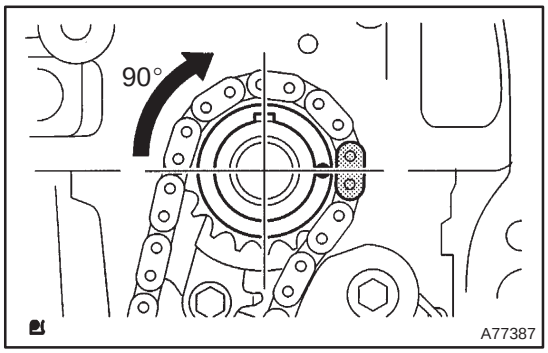


(i) Rotate the crankshaft clockwise 90°, and position the crankshaft key upward.

cardiagn.com

## 39. INSTALL CRANKSHAFT TIMING GEAR OR SPROCKET

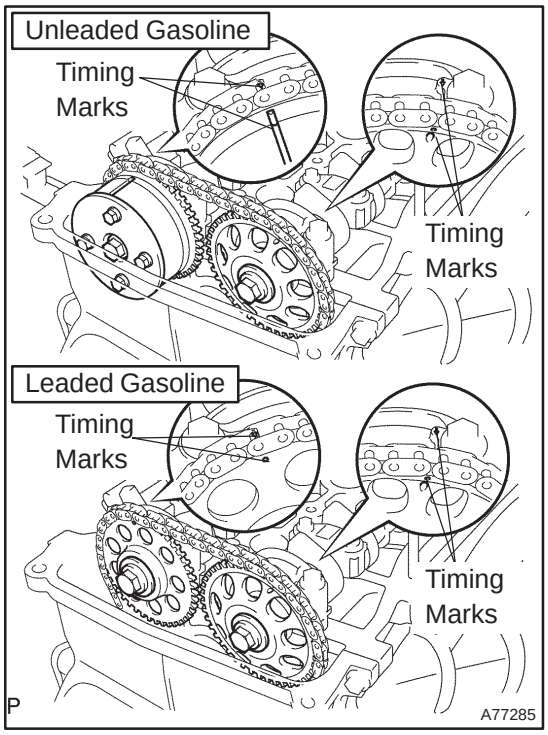


**40. SET NO. 1 CYLINDER TO TDC/COMPRESSION**

(a) Turn the camshafts with a wrench on the hexagonal lobe, and align the timing marks of the camshaft timing gear with each timing mark located on the No. 1 and No. 2 bearing caps as shown in the illustration.

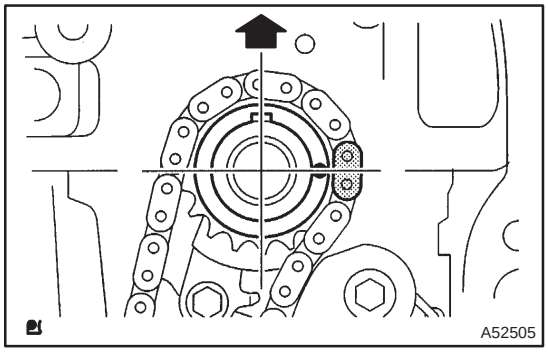


(b) Using the crankshaft pulley bolt, turn the crankshaft and position the key on the crankshaft upward.

## 41. INSTALL CHAIN VIBRATION DAMPER NO.1

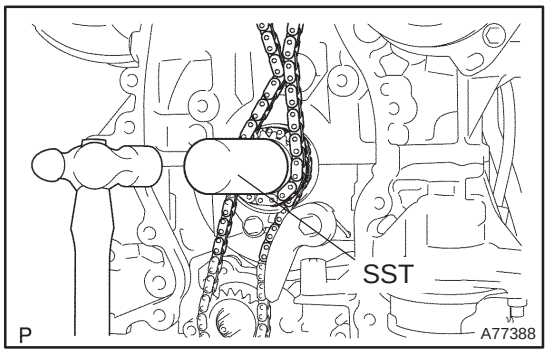


**42. INSTALL CHAIN SUB–ASSY**

cardiagn.com

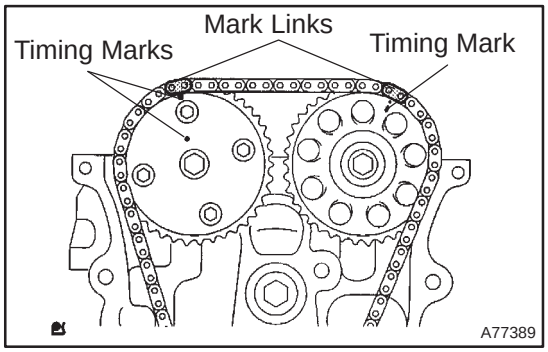


(a) Align the mark links (gold or yellow colored links) with each timing mark located on the camshaft timing gears, and install the chain.

**43. INSTALL TIMING CHAIN GUIDE**
**Torque: 9.0 N·m (92 kgf·cm, 80 in.·lbf)**

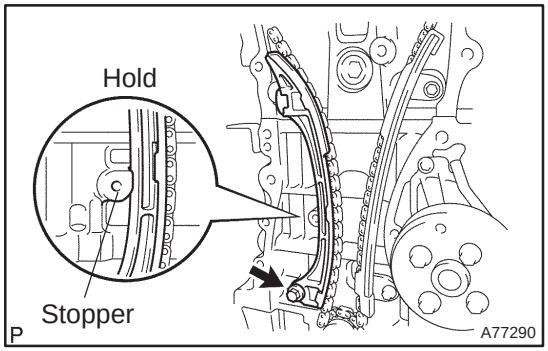


**44. INSTALL CHAIN TENSIONER SLIPPER**

(a) Install the chain tensioner slipper with the bolt.
**Torque: 19 N·m (195 kgf·cm, 14 ft·lbf)**

(b) Check that the chain tensioner slipper is hold on the cylinder block stopper.

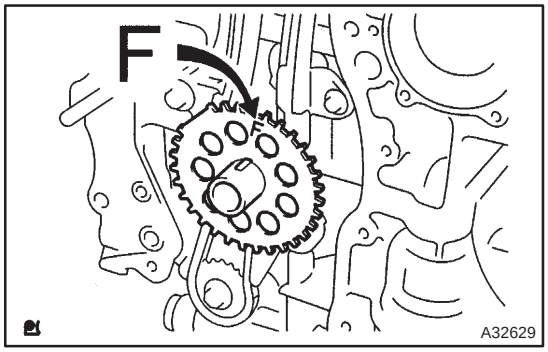


**45. INSTALL CRANKSHAFT POSITION SENSOR PLATE NO.1**

(a) Install the plate with the ”F” mark facing forward.

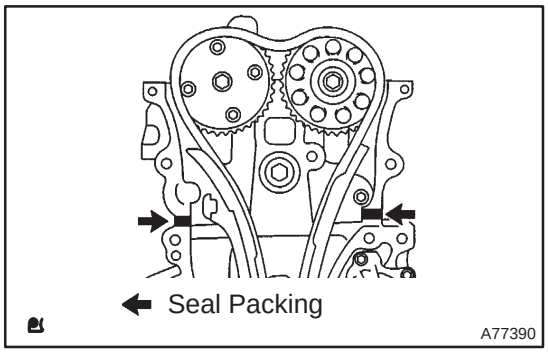


**46. INSTALL TIMING CHAIN OR BELT COVER SUB–ASSY**

**NOTICE:**

- **Remove any oil from the contact surface.**
- **Install the chain cover within 3 minutes after applying seal packing.**
- **Do not start the engine within 2 hours after installing.**

(a) Remove any old packing (FIPG) material and be careful not to drop any oil on the contact surfaces of the timing chain cover.

(b) Apply a continuous bead (Diameter 2 mm (0.09 in.)) of seal packing as shown in the illustration.
**Seal packing: Part No. 08826 – 00080 or equivalent.**

cardiagn.com

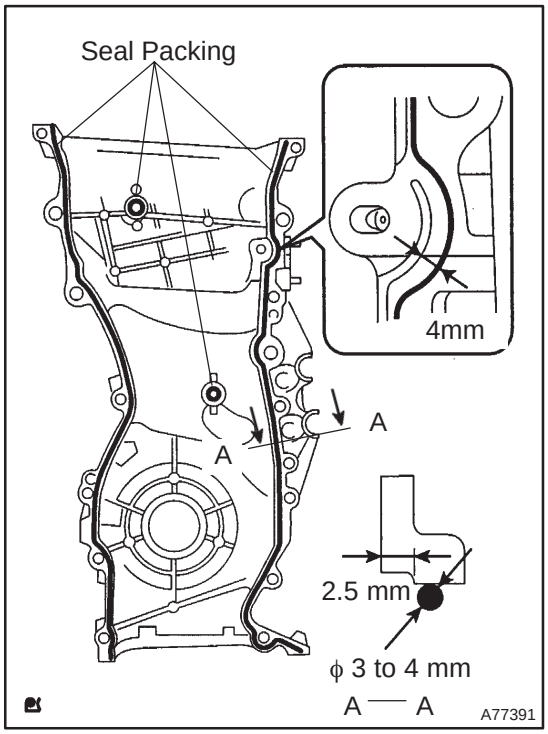


(c) Apply a continuous bead (Diameter 3 to 4 mm (0.118 to 0.157 in.)) of seal packing as shown in the illustration.
**Seal packing: Part No. 08826 – 00080 or equivalent**

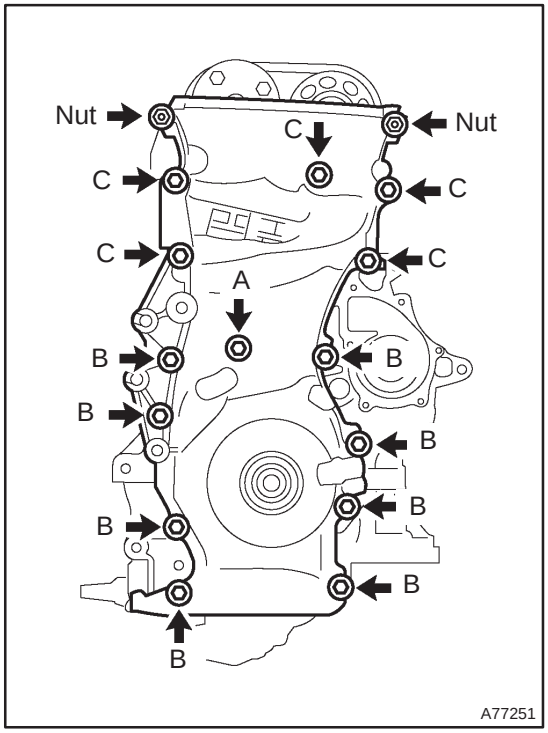


(d) Install the timing chain cover with the 14 bolts and 2 nuts.
**Torque:**
**Bolt A 9.0 N·m (92 kgf·cm, 80 in.·lbf)**
**Bolt B 21 N·m (214 kgf·cm, 15 ft·lbf)**
**Bolt C 43 N·m (438 kgf·cm, 32 ft·lbf)**
**Nut 9.0 N·m (92 kgf·cm, 80 in.·lbf)**

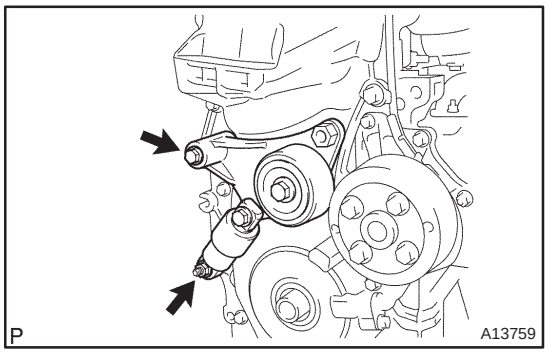


**47. INSTALL V–RIBBED BELT TENSIONER ASSY**

(a) Install the V–ribbed belt tensioner with the bolt and nut.
**Torque: 60 N·m (610 kgf·cm, 44 ft·lbf)**

**NOTICE:**
**As the drive tensioner should be fastened together with the timing chain cover, so be sure install it within 15 minutes after the timing chain cover is installed.**

cardiagn.com

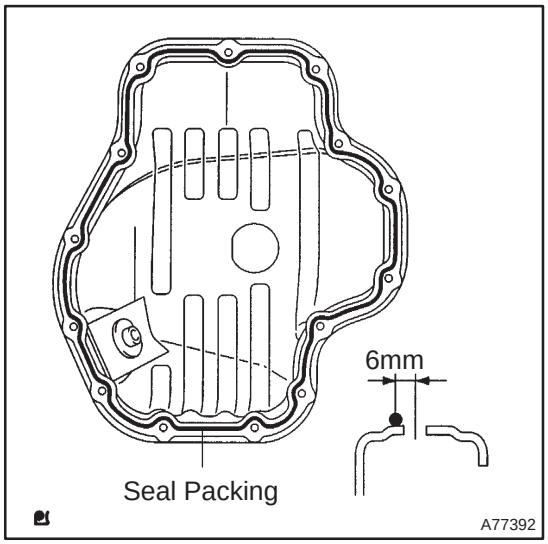


**48. INSTALL OIL PAN SUB–ASSY**

**NOTICE:**

- **Remove any oil from the contact surface.**
- **Install the oil pan within 3 minutes after applying seal packing.**
- **Do not start the engine within 2 hours after installing.**

(a) Remove any old packing (FIPG) material and be careful not to drop any oil on the contact surface of the cylinder block and oil pan.

(b) Apply a continuous bead (Diameter 3 mm to 4 mm (0.157 in.)) of seal packing as shown in the illustration, and install the oil pan.
**Seal packing: part No. 08826 – 00080 or equivalent**

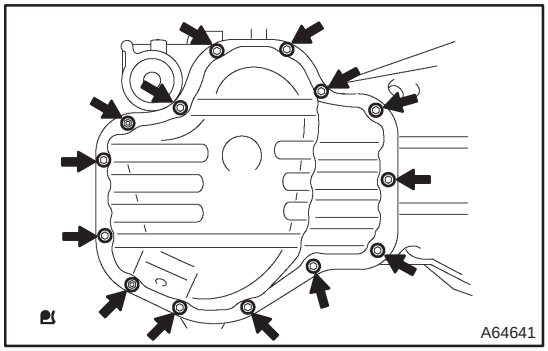


(c) Install the oil pan with the 12 bolts and 2 nuts.
**Torque: 9.0 N·m (92 kgf·cm, 80 in.·lbf)**

**49. INSTALL CRANKSHAFT POSITION SENSOR**

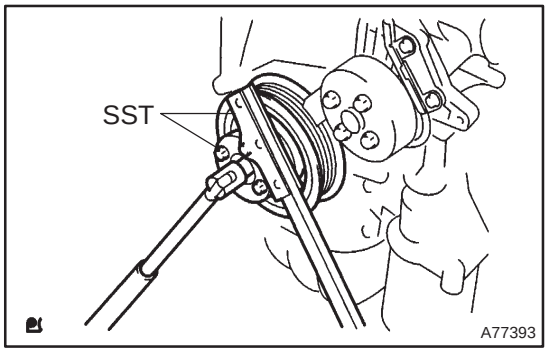


**50. INSTALL CRANKSHAFT PULLEY**

(a) Using SST, tighten the set bolt.
SST 09213–54015 (91651–60855), 09330–00021
**Torque: 170 N·m (1,733 kgf·cm, 125 ft·lbf)**

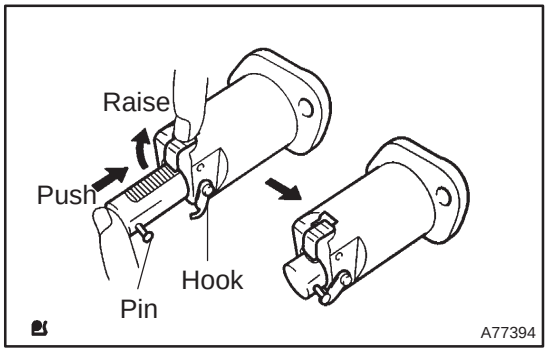


**51. INSTALL CHAIN TENSIONER ASSY NO.1**

(a) Release the ratchet pawl, fully push in the plunger and apply the hook to the pin so that the plunger is located in position.

cardiagn.com

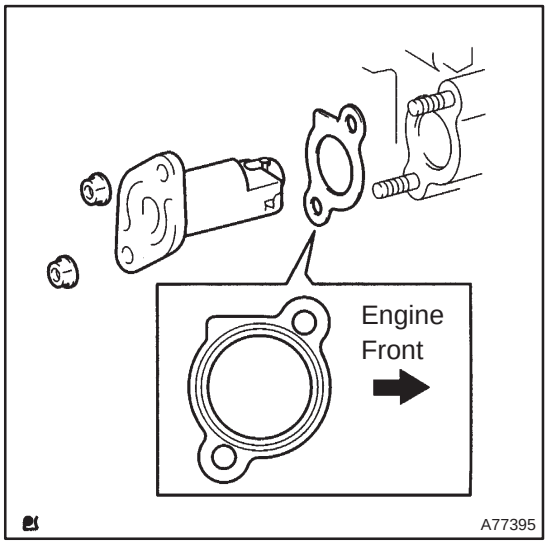


(b) Install a new gasket chain tensioner with the 2 nuts.
**Torque: 9.0 N·m (92 kgf·cm, 80 in.·lbf)**

**NOTICE:**
**If the hook is released wile inserting, apply the hook again, and insert the chain tensioner.**

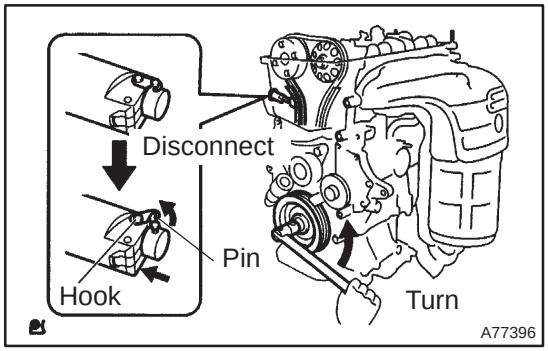


(c) Turn the crankshaft counterclockwise, and check that the hook is disengaged from the plunger knock pin.

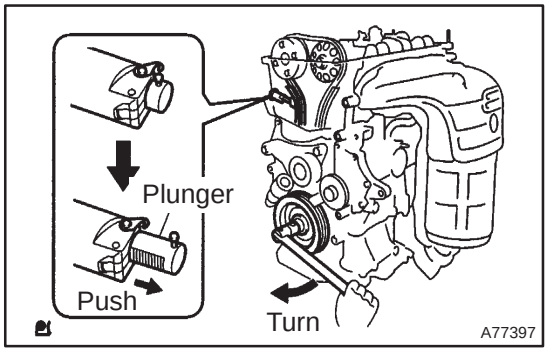


(d) Turn the crankshaft clockwise, and check that the plunger is extended.

**52. INSTALL TRANSVERSE ENGINE ENGINE MOUNTING INSULATOR**
**Torque: 52 N·m (530 kgf·cm, 38 ft·lbf)**

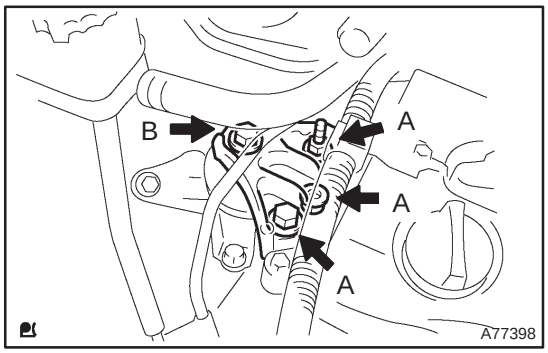


**53. INSTALL ENGINE MOUNTING BRACKET NO.2 RH**
**Torque:**
**A 52 N·m (530 kgf·cm, 38 ft·lbf)**
**B 113 N·m (1,152 kgf·cm, 83 ft·lbf)**

**54. INSTALL CYLINDER HEAD COVER SUB–ASSY**

(a) Remove any old seal packing (FIPG) material.

cardiagn.com

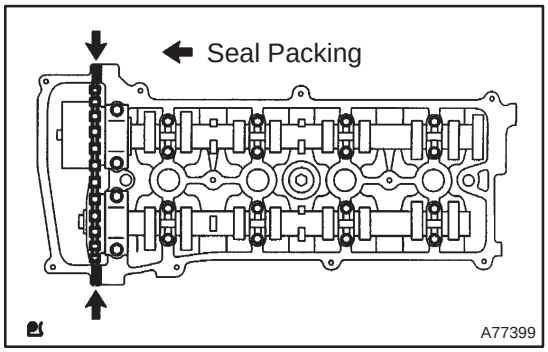


(b) Apply seal packing to the 2 locations as shown in the illustration.
**Seal Packing: Part No. 08826–00080 or equivalent**

**NOTICE:**

- **Remove any oil from the contact surface.**
- **Install the cylinder head cover within 5 minutes after applying seal packing.**
- **Do not expose the seal to engine oil 2 hours after installing.**

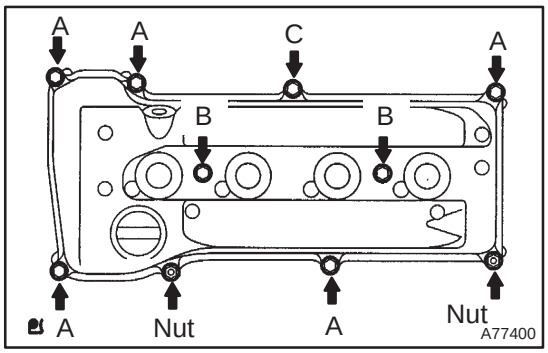


(c) install the cylinder head cover with the 8 bolts and 2 nuts.
**Torque:**
**Bolt A 11 N·m (112 kgf·cm, 8 ft·lbf)**
**Bolt B 14 N·m (143 kgf·cm, 10 ft·lbf)**
**Bolt C 21 N·m (214 kgf·cm, 15 ft·lbf)**
**Nut 11 N·m (112 kgf·cm, 8 ft·lbf)**

**55. INSTALL ENGINE SERVICE COVER BRACKET RH (W/O AIR CONDITIONING)**
**Torque: 9.0 N·m (92 kgf·cm, 80 in.·lbf)**
**56. INSTALL COOLER BRACKET (LHD(W/ AIR CONDITIONER) STEERING POSITION TYPE)**
**Torque: 9.0 N·m (92 kgf·cm, 80 in.·lbf)**
**57. INSTALL ENGINE SERVICE COVER BRACKET RH (RHD(W/ AIR CONDITIONER) STEERING POSITION TYPE)**
**Torque: 9.0 N·m (92 kgf·cm, 80 in.·lbf)**
**58. INSTALL ENGINE WIRE**
**Torque: 7.0 N·m (71 kgf·cm, 62 in.·lbf)**
**59. INSTALL OIL RESERVOIR BRACKET NO.1**
**Torque: 8.0 N·m (82 kgf·cm, 71 in.·lbf)**
**60. INSTALL COOLER REFRIGERANT SUCTION HOSE NO.1 (LHD(W/ AIR CONDITIONER) STEERING POSITION TYPE)**
**61. INSTALL RETURN TUBE SUB–ASSY**
**Torque: 8.0 N·m (82 kgf·cm, 71 in.·lbf)**
**62. INSTALL IGNITION COIL ASSY**
**Torque: 9.0 N·m (92 kgf·cm, 80 in.·lbf)**
**63. INSTALL VANE PUMP ASSY**
**Torque: 37 N·m (377 kgf·cm, 27 ft·lbf)**
**64. INSTALL EXHAUST PIPE ASSY FRONT (See page 15–7)**
**65. INSTALL GENERATOR ASSY (See page 19–20)**
**66. INSTALL FAN AND GENERATOR V BELT (See page 14–105)**
SST 09249–63010
**67. ADD ENGINE OIL**
**68. CHECK FOR ENGINE OIL LEAKS**
**69. INSTALL ENGINE COVER SUB–ASSY NO.1**
**Torque: 7.0 N·m (71 kgf·cm, 62 in.·lbf)**
**70. INSTALL FRONT WHEEL RH**
**Torque: 103 N·m (1,050 kgf·cm, 76 ft·lbf)**

cardiagn.com

# CHAIN SUB–ASSY (1AZ–FSE)

141BC–01

## COMPONENTS

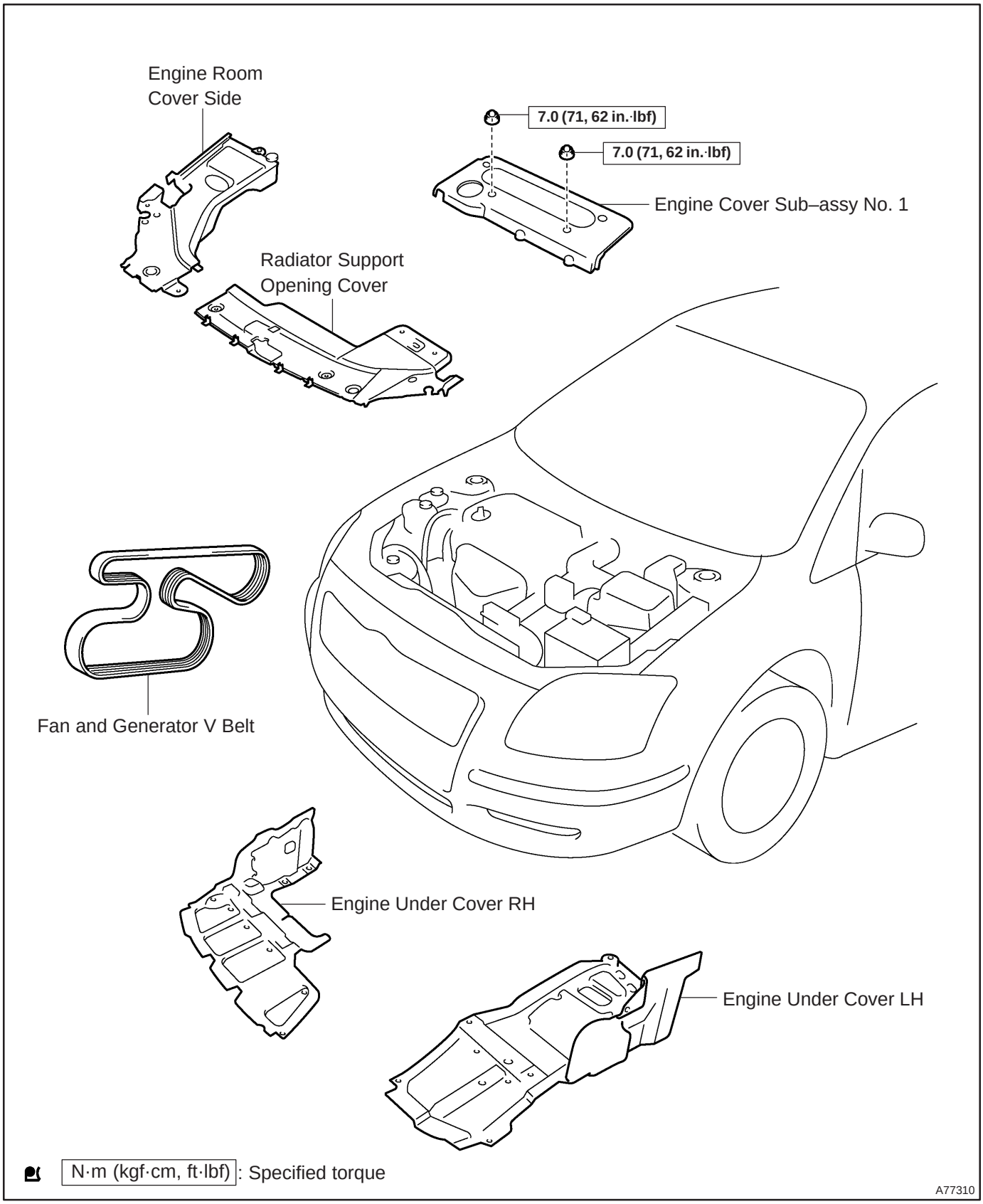


cardiagn.com

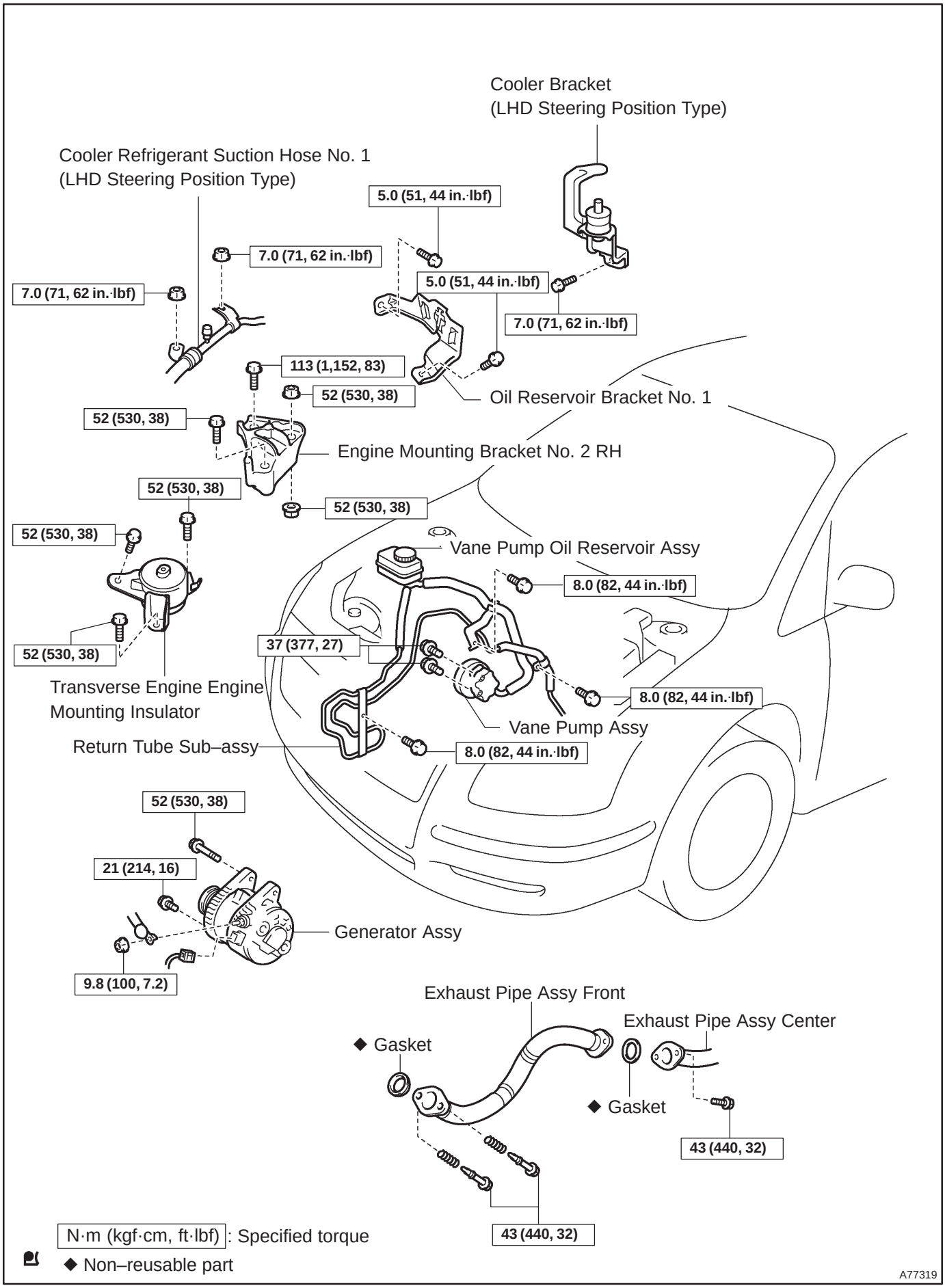


cardiagn.com

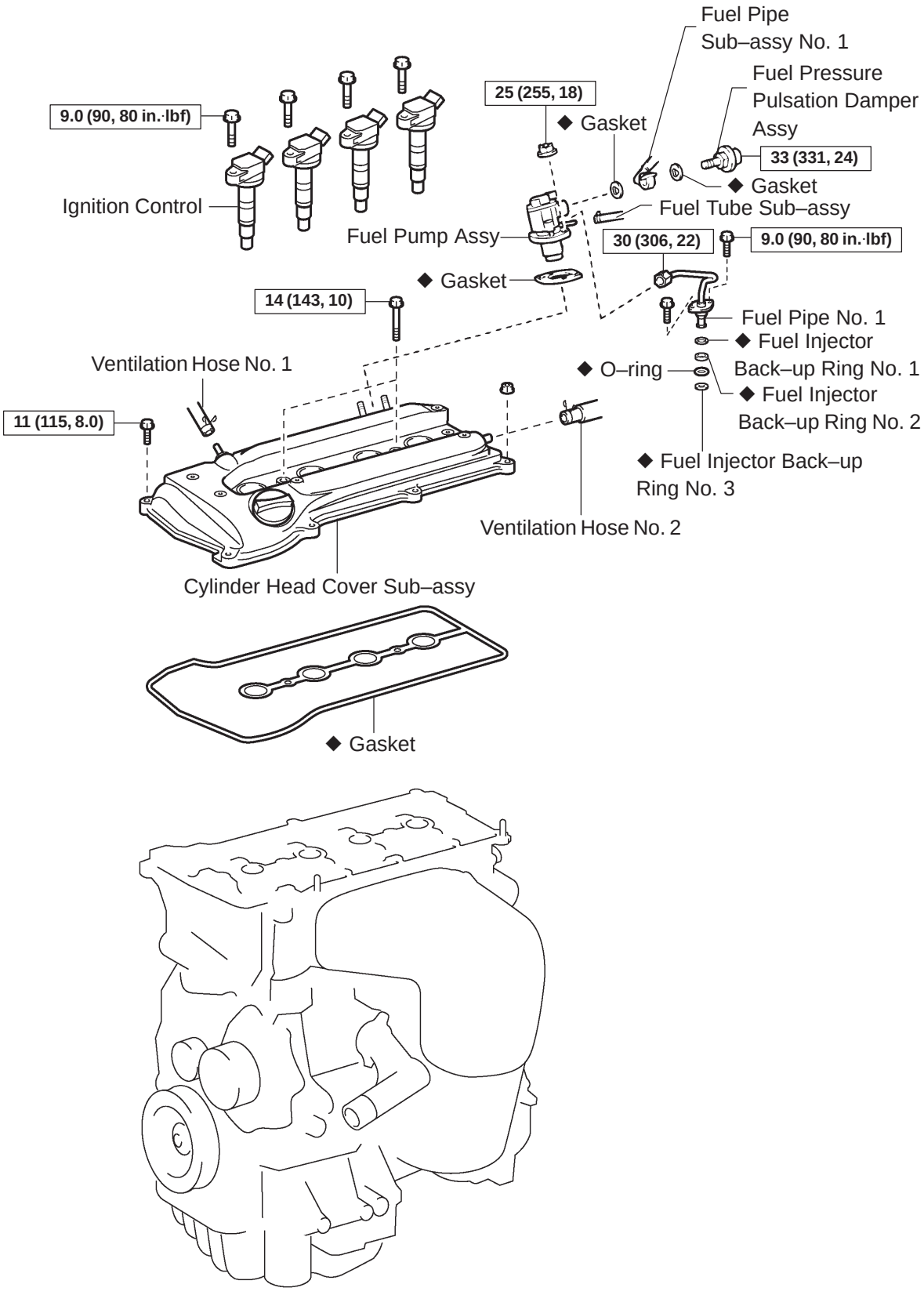


N·m (kgf·cm, ft·lbf) : Specified torque

◆ Non–reusable part

A77374

cardiagn.com

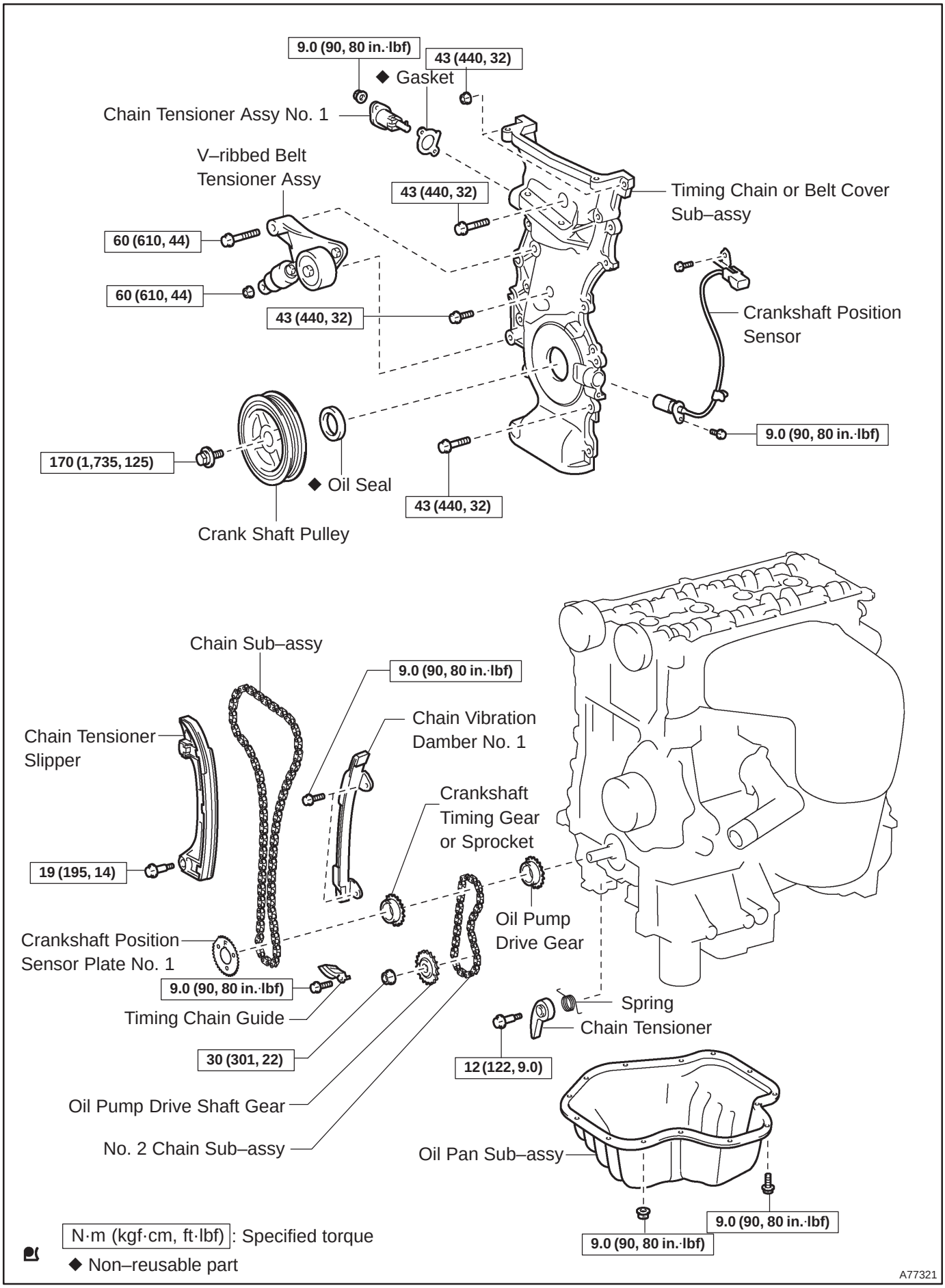


cardiagn.com

# CHAIN SUB–ASSY (1ZZ–FE/3ZZ–FE)

141CH–01

## COMPONENTS

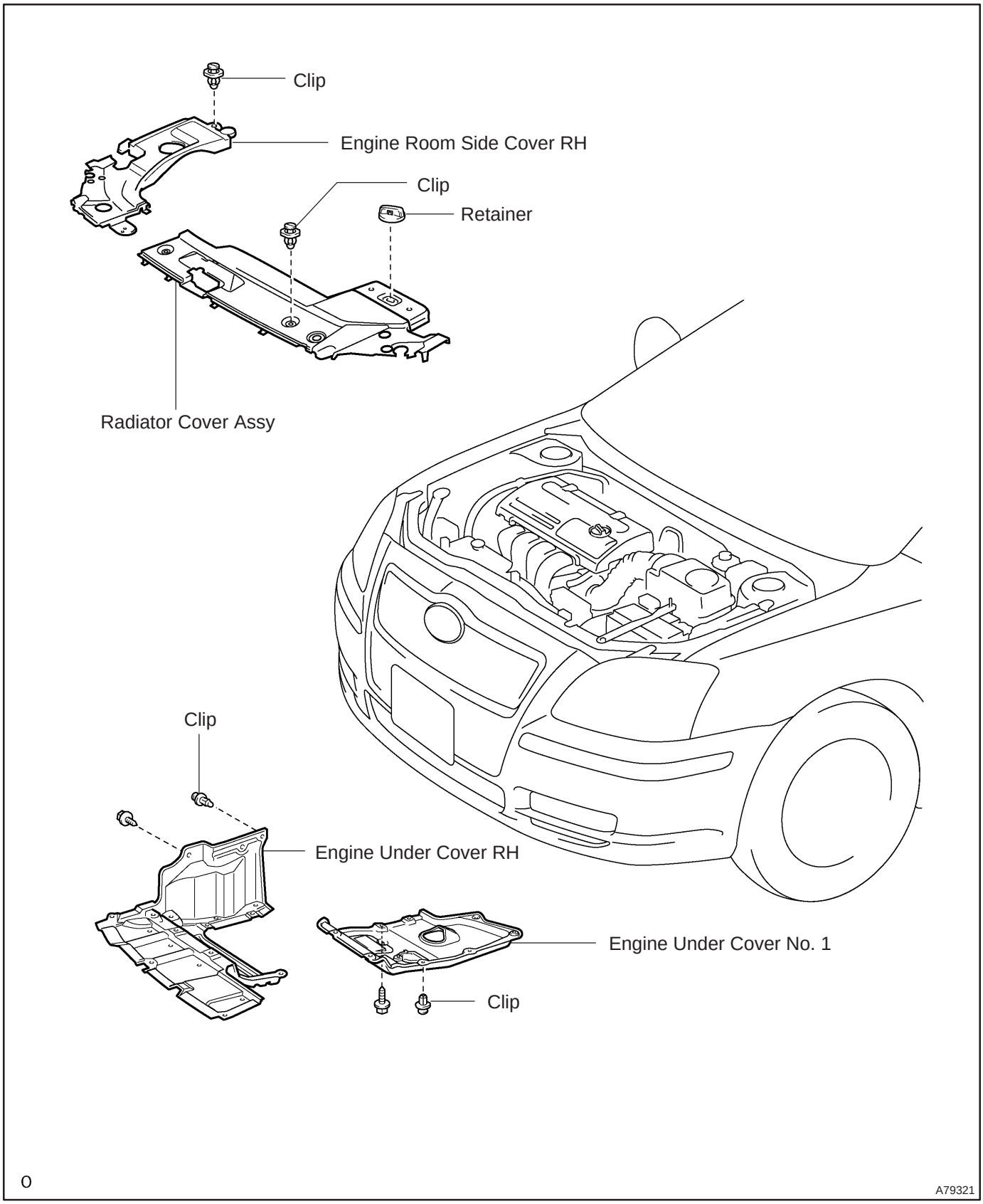


cardiagn.com

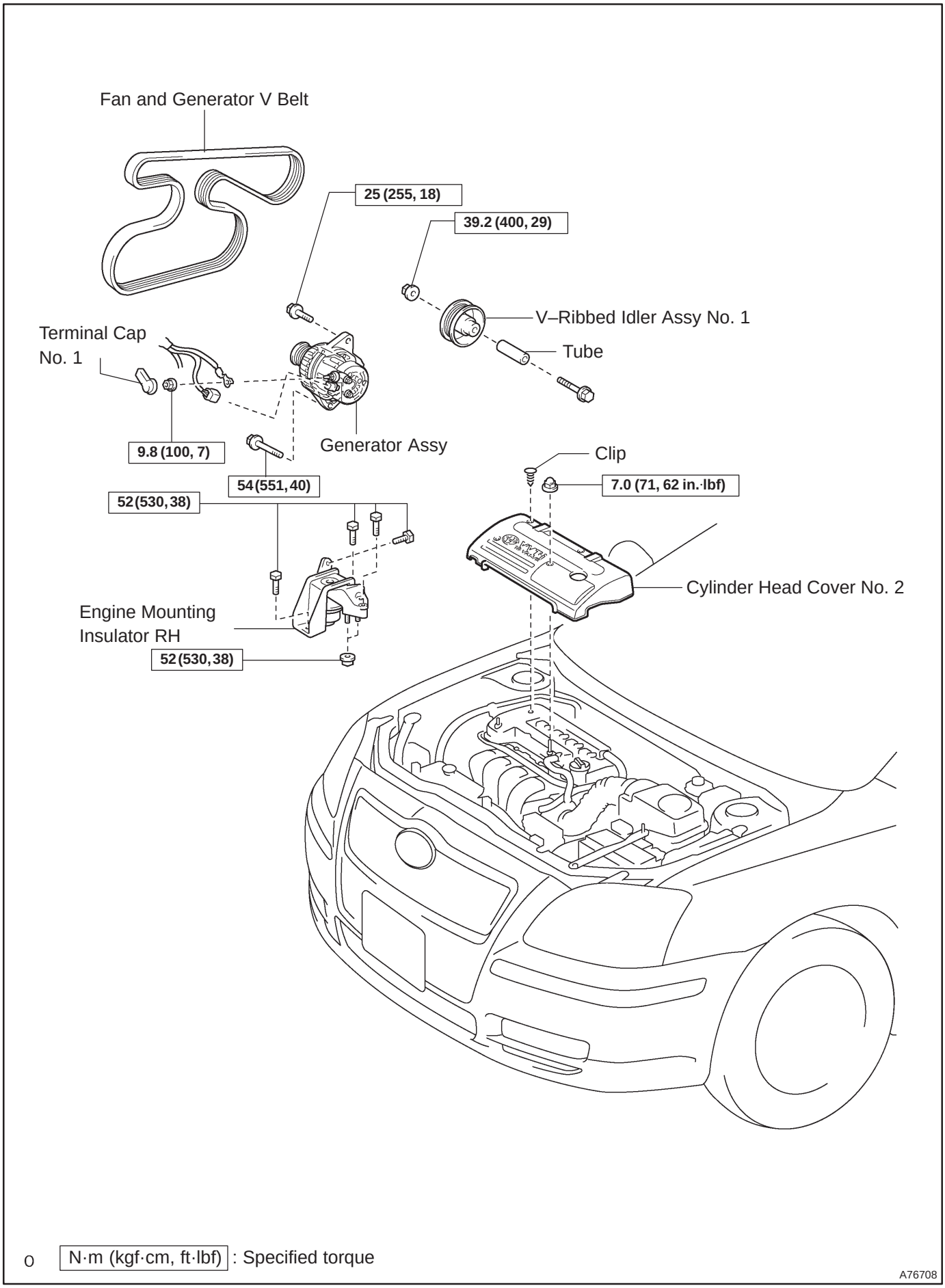


cardiagn.com

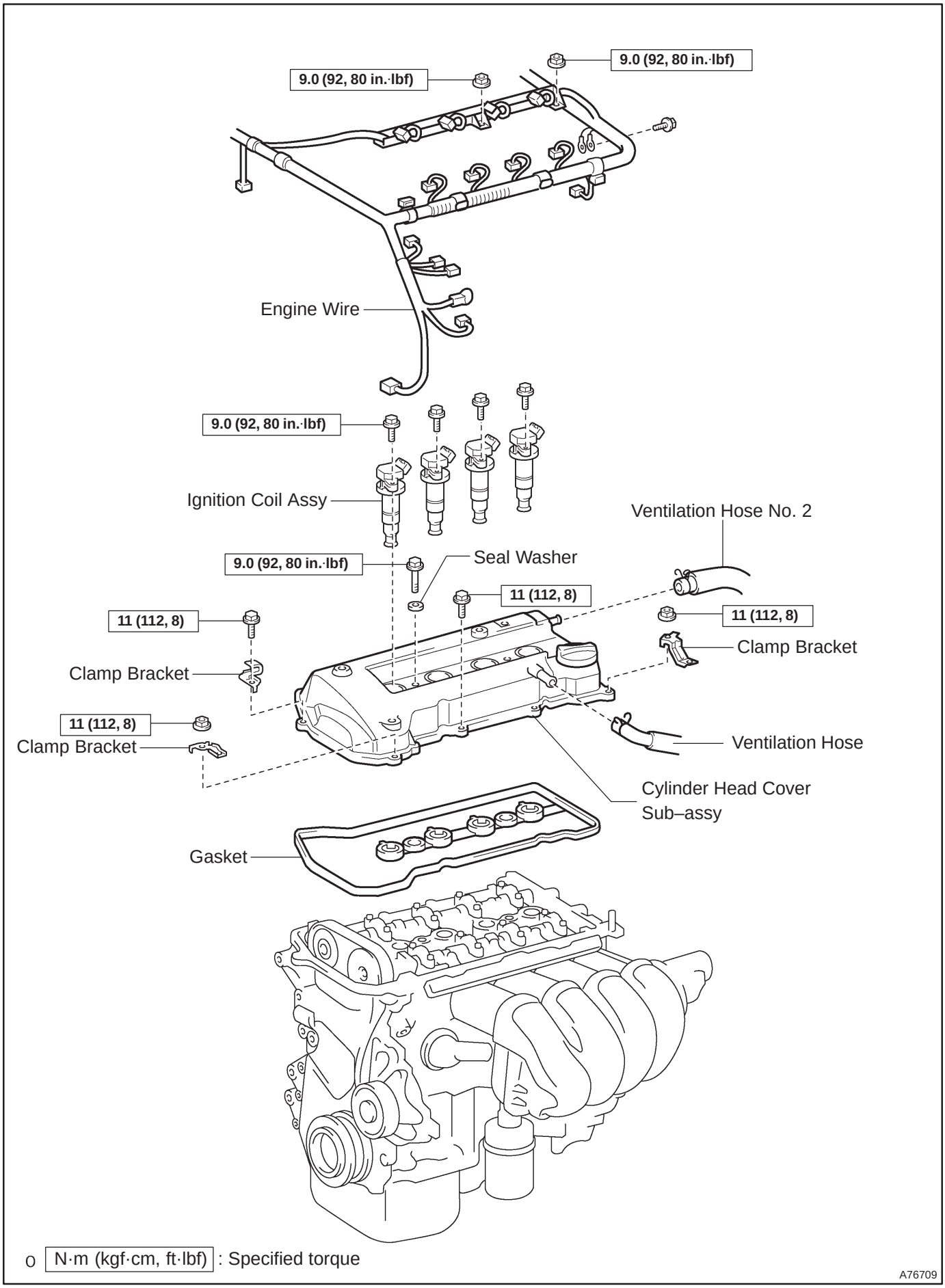


cardiagn.com

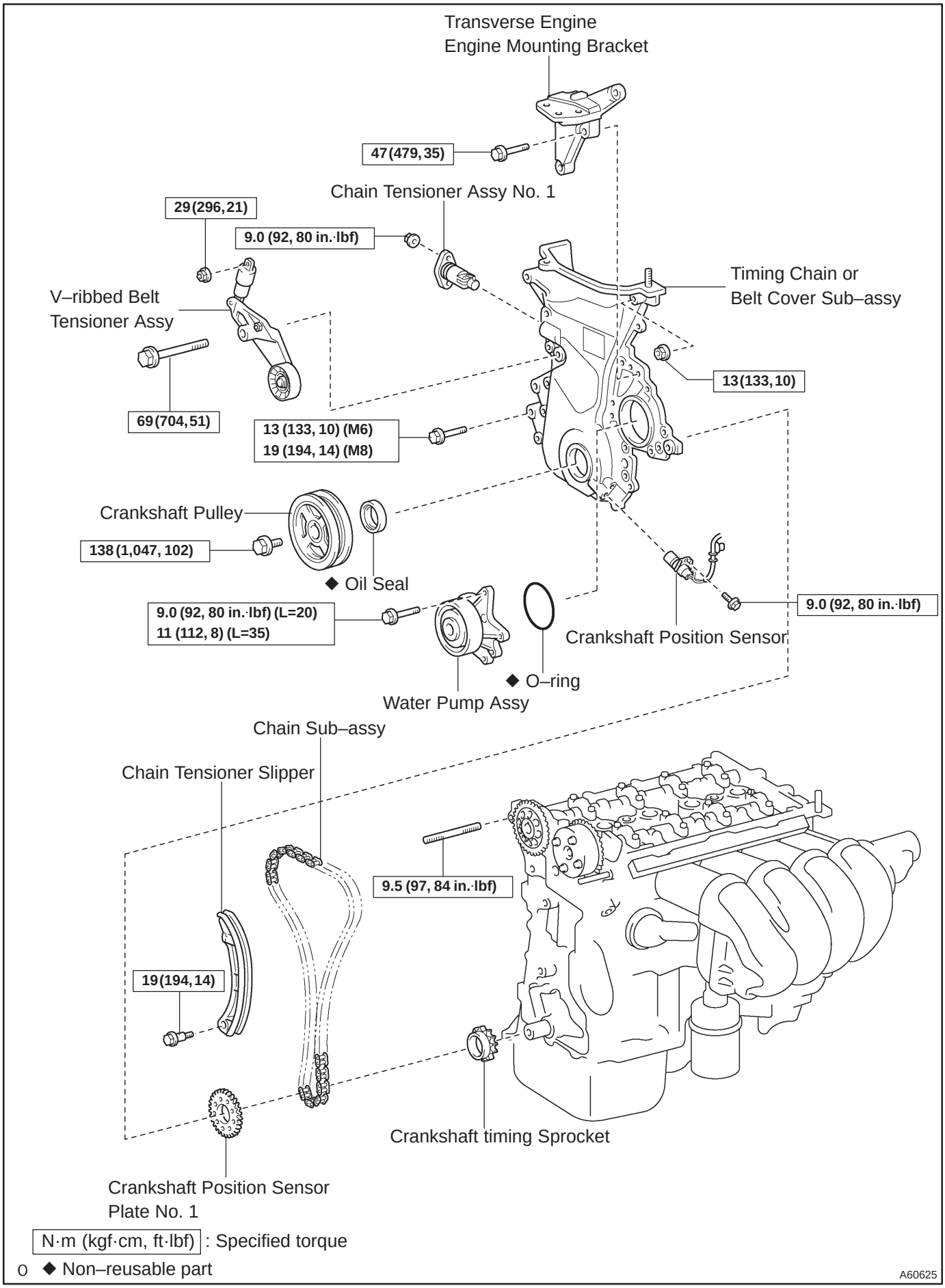


cardiagn.com

# CRANKSHAFT SEAL (1CD–FTV)

141CB–01

## REPLACEMENT

**1. DRAIN ENGINE OIL**

(a) Install a new gasket and the drain plug after draining engine oil.
**Torque: 34 N·m (350 kgf·cm, 25 ft·lbf)**

**2. REMOVE FRONT WHEEL RH**

**3. REMOVE ENGINE UNDER COVER RH**

**4. REMOVE RADIATOR SUPPORT OPENING COVER**

**5. REMOVE ENGINE ROOM COVER SIDE**

**6. REMOVE ENGINE COVER NO.1**

(a) Remove the 5 nuts and the engine cover.

**7. REMOVE INJECTOR DRIVER (See page 14–286)**

**8. REMOVE V (COOLER COMPRESSOR TO CRANKSHAFT PULLEY) BELT NO.1 (See page 14–269)**

**9. REMOVE GENERATOR V BELT (See page 14–269)**

**10. REMOVE POWER STEERING IDLE PULLEY BRACKET (See page 14–286)**

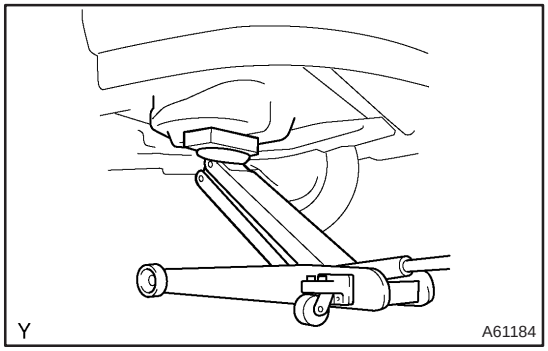


**11. REMOVE ENGINE MOUNTING INSULATOR SUB–ASSY RH**

(a) Place a wooden block on a jack underneath the engine.

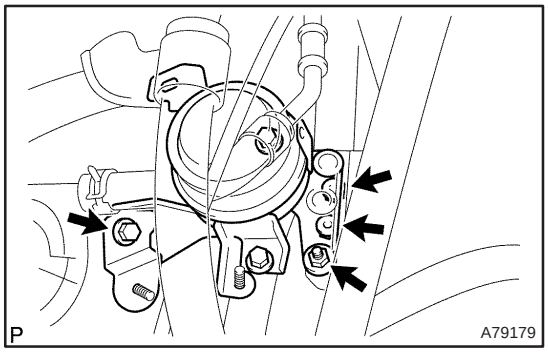


(b) Remove the 3 bolts and 3 nuts, and then detach the engine mounting insulator sub assy.

**12. REMOVE CRANKSHAFT PULLEY (See page 14–307)**

SST 09213–54015 (90105–08076), 09330–00021, 09950–50013 (09951–05010, 09952–05010, 09953–05020, 09954–05031)

**13. REMOVE IDLER PULLEY SUB–ASSY (See page 14–307)**

**14. REMOVE TIMING BELT NO.2 COVER (See page 14–307)**

**15. REMOVE TIMING BELT NO.1 COVER (See page 14–307)**

**16. REMOVE TIMING BELT GUIDE**

**17. REMOVE TRANSVERSE ENGINE ENGINE MOUNTING BRACKET (See page 14–307)**

**18. SET NO. 1 CYLINDER TO TDC/COMPRESSION (See page 14–307)**

**19. REMOVE TIMING CHAIN COVER PLATE (See page 14–307)**



cardiagn.com

**20. REMOVE TIMING BELT (See page 14–307)**

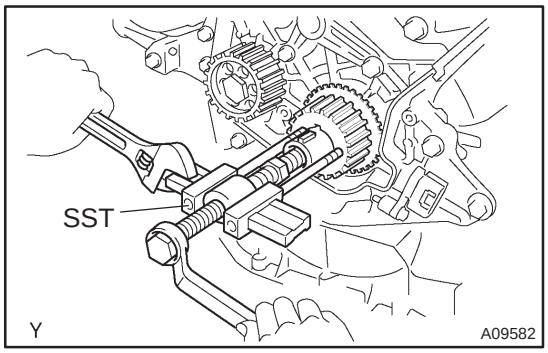


**21. REMOVE CRANKSHAFT TIMING PULLEY**

(a) If the timing pulley cannot be removed by hand, use SST to remove the pulley.
SST 09950–50013 (09951–05010, 09952–05010, 09953–05010, 09953–05020, 09954–05021)

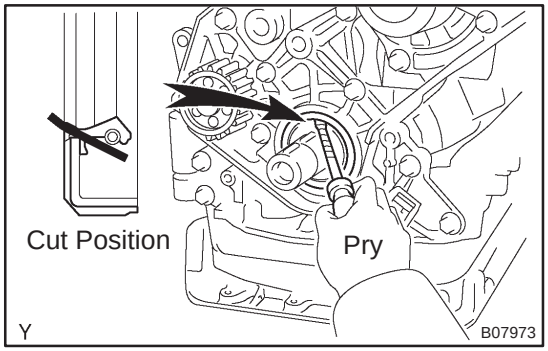


**22. REMOVE CRANKSHAFT SEAL**

(a) Using a knife, cut off the oil seal lip.
(b) Using a screwdriver, pry out the oil seal.

**NOTICE:**
**Be careful not to damage the crankshaft. Warp tip of the screwdriver with tape.**

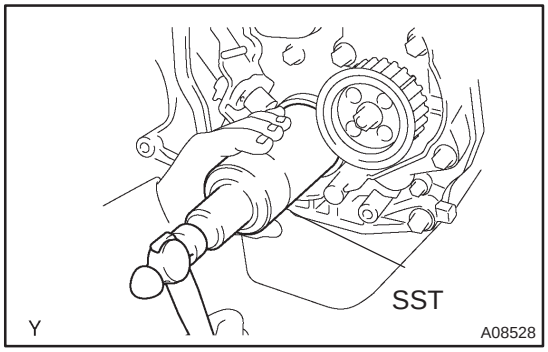


**23. INSTALL CRANKSHAFT SEAL**

(a) Using SST and a hammer, tap in the oil seal until its surface is flush with the oil pump edge.
SST 09316–60011 (09316–00011)

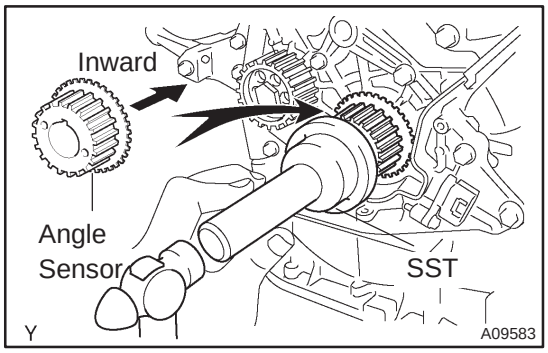


**24. INSTALL CRANKSHAFT TIMING PULLEY**

(a) Align the keyway of the timing pulley with the key located on the crankshaft, slide the pulley into place.
(b) Using SST and a hammer, tap in the timing pulley with the angle sensor facing inward.
SST 09223–46011

**25. SET NO. 1 CYLINDER TO TDC/COMPRESSION (See page 14–307)**
SST 09960–10010 (09962–01000, 09963–01000)

**26. INSTALL TIMING BELT (See page 14–307)**

**27. CHECK VALVE TIMING (See page 14–307)**

**28. INSTALL TIMING CHAIN COVER PLATE (See page 14–307)**



cardiagn.com

29. **INSTALL TRANSVERSE ENGINE ENGINE MOUNTING BRACKET (See page 14–307)**
30. **INSTALL TIMING BELT GUIDE (See page 14–307)**
31. **INSTALL TIMING BELT NO.1 COVER (See page 14–307)**
32. **INSTALL TIMING BELT NO.2 COVER (See page 14–307)**
33. **INSTALL IDLER PULLEY SUB–ASSY (See page 14–307)**
34. **INSTALL CRANKSHAFT PULLEY (See page 14–307)**
    SST 09213–54015 (90105–08076), 09330–00021
35. **INSTALL ENGINE MOUNTING INSULATOR SUB–ASSY RH (See page 14–307)**
36. **INSTALL POWER STEERING IDLE PULLEY BRACKET (See page 14–286)**
37. **ADJUST V (COOLER COMPRESSOR TO CRANKSHAFT PULLEY) BELT NO.1 (See page 14–269)**
38. **INSTALL INJECTOR DRIVER (See page 14–286)**
39. **INSTALL ENGINE COVER NO.1**
    **Torque: 8.0 N·m (82 kgf·cm, 71 in.·lbf)**
40. **INSTALL FRONT WHEEL RH**
    **Torque: 103 N·m (1,050 kgf·cm, 76 ft·lbf)**
41. **ADD ENGINE OIL**
42. **CHECK FOR ENGINE OIL LEAKS**

cardiagn.com

# CYLINDER HEAD GASKET (1AZ–FE)

141BA–01

## COMPONENTS

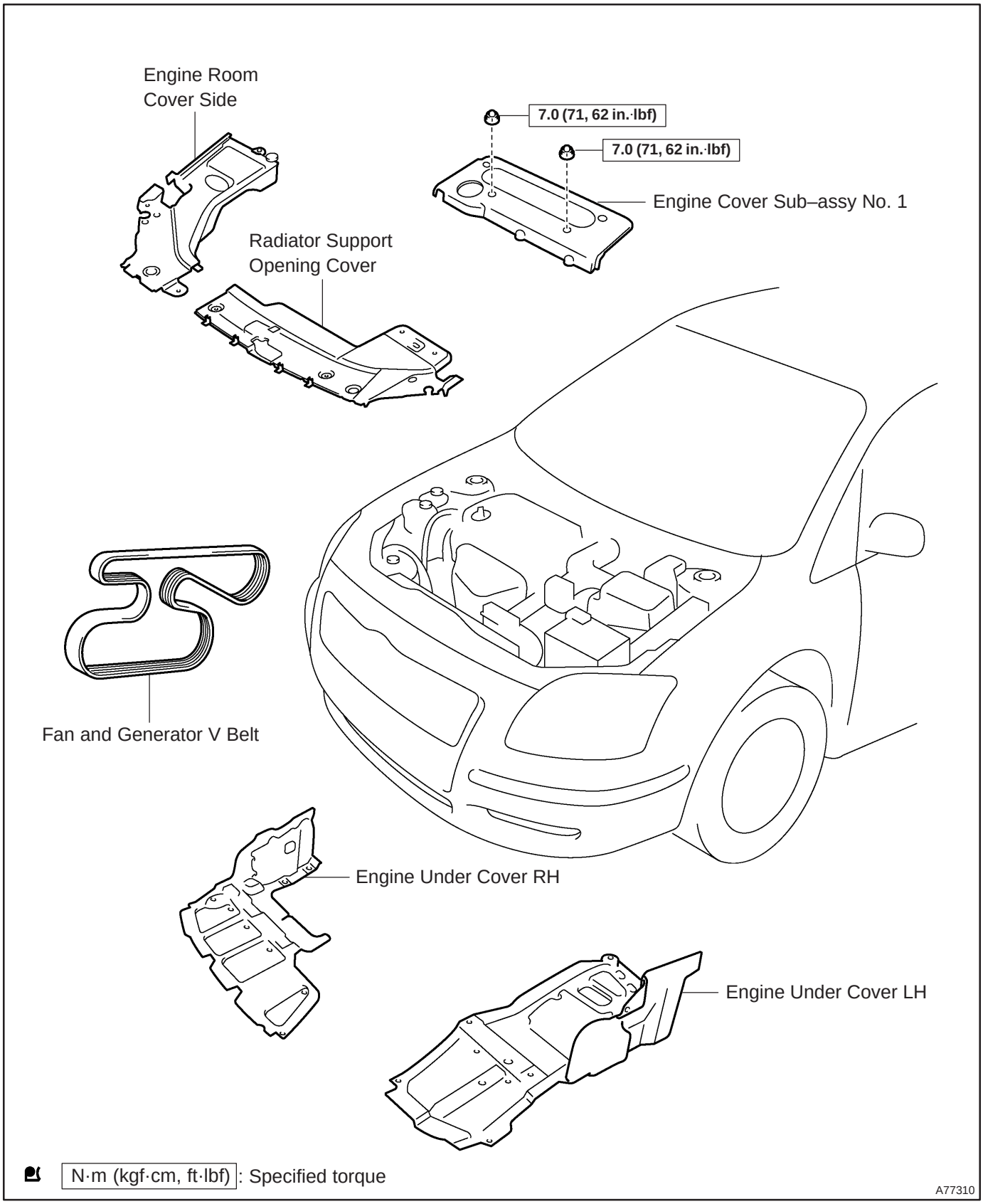


cardiagn.com

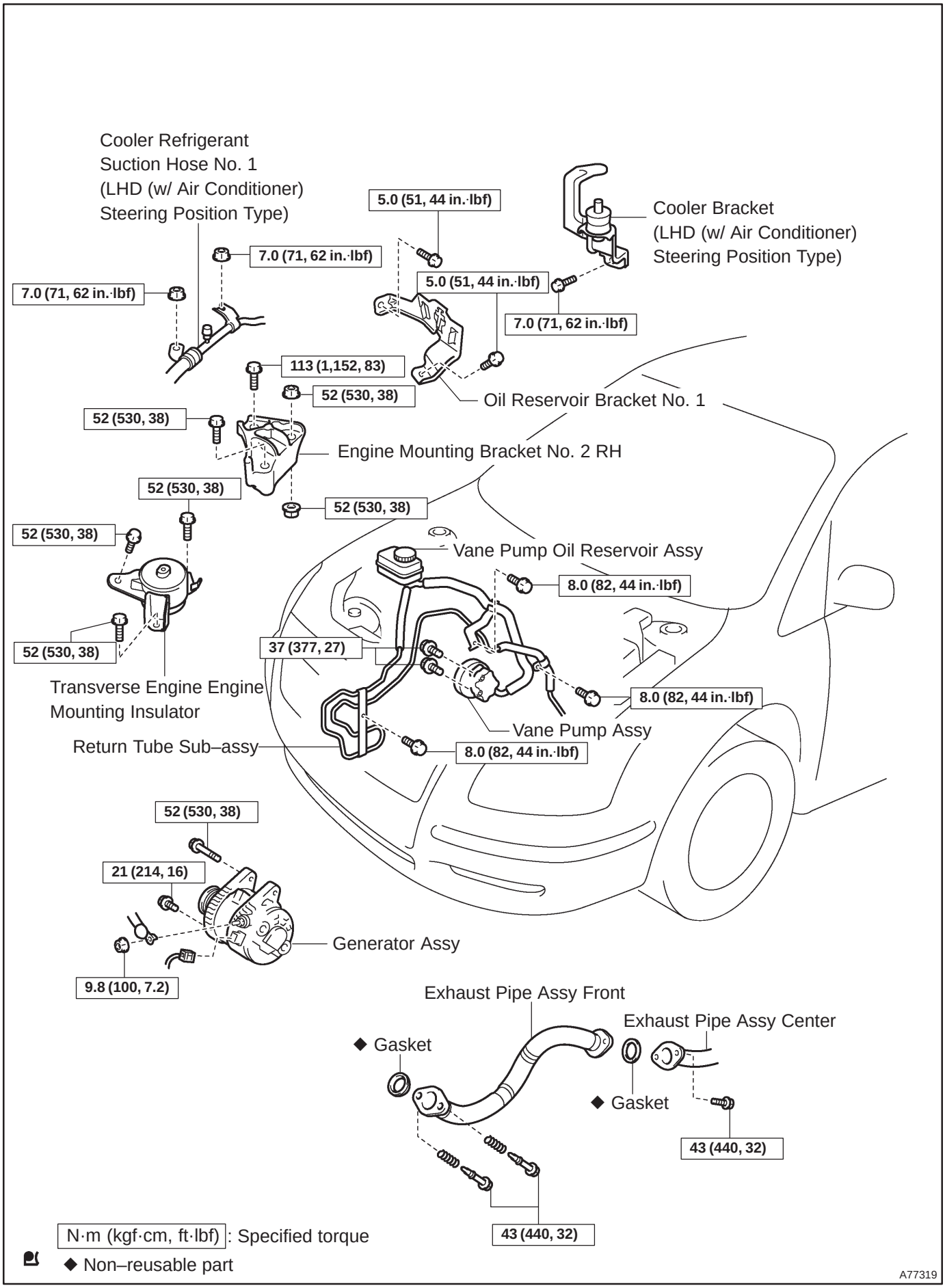


cardiagn.com

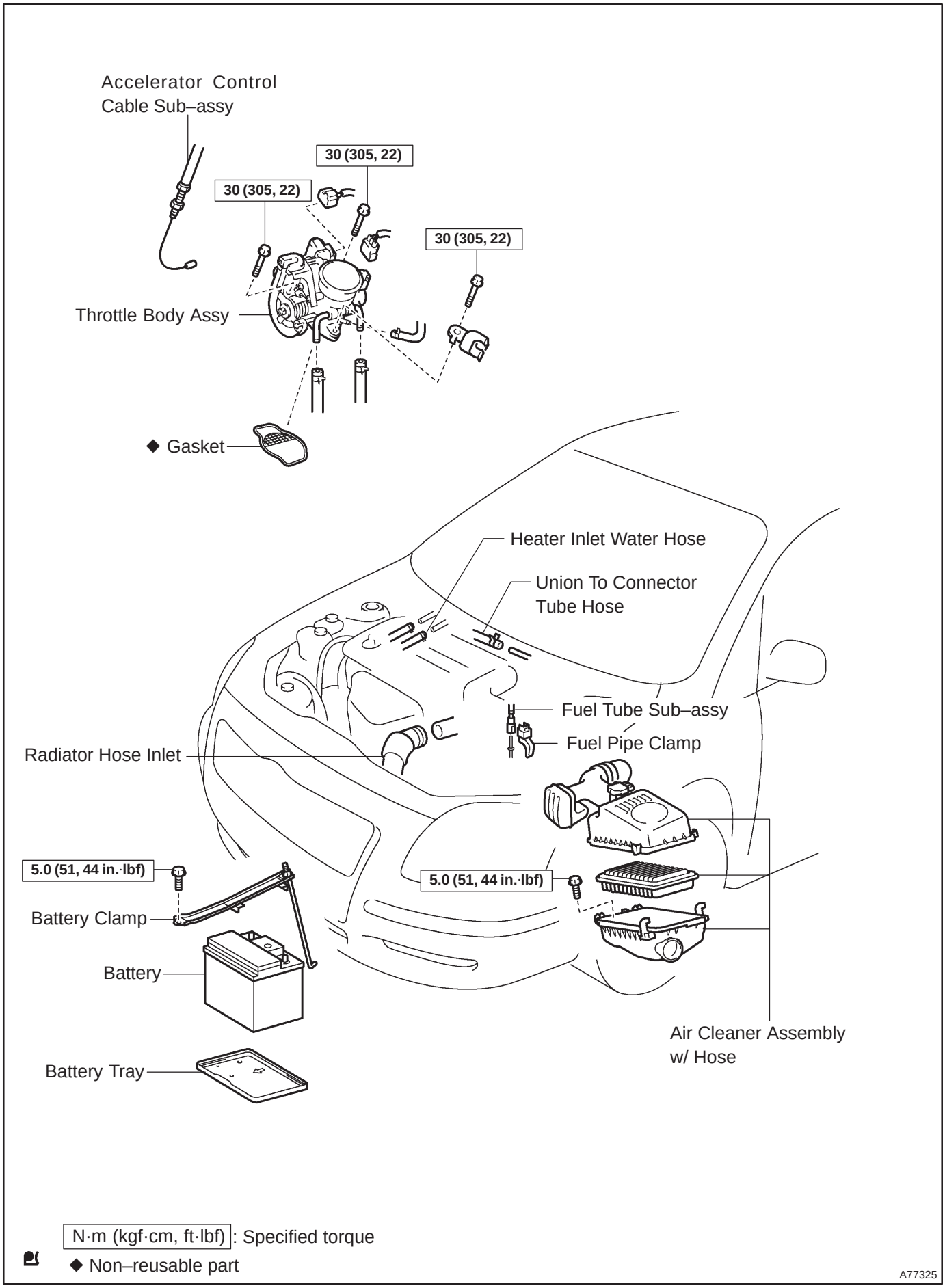


cardiagn.com

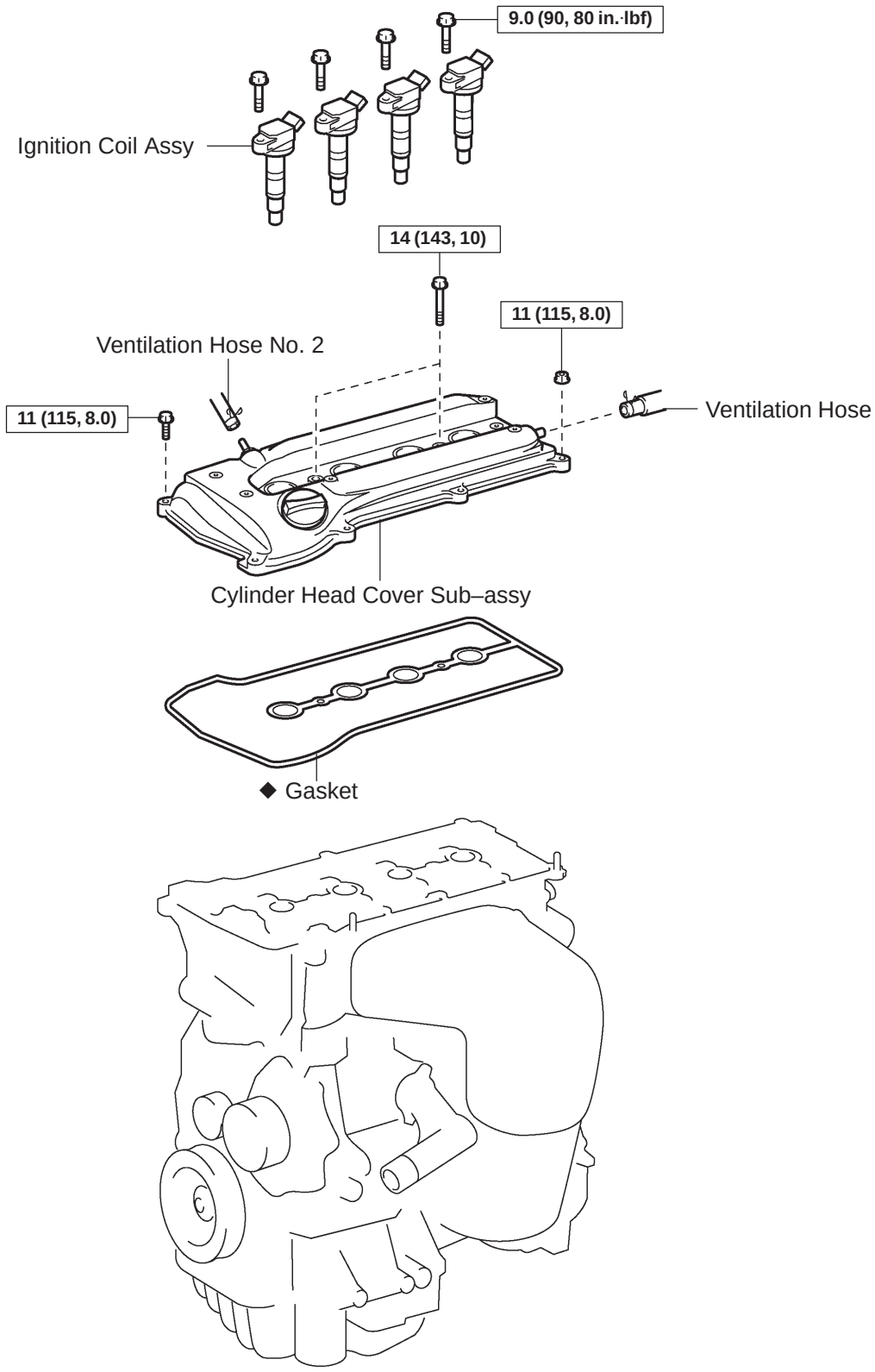


N·m (kgf·cm, ft·lbf) : Specified torque

◆ Non–reusable part

A77320

cardiagn.com

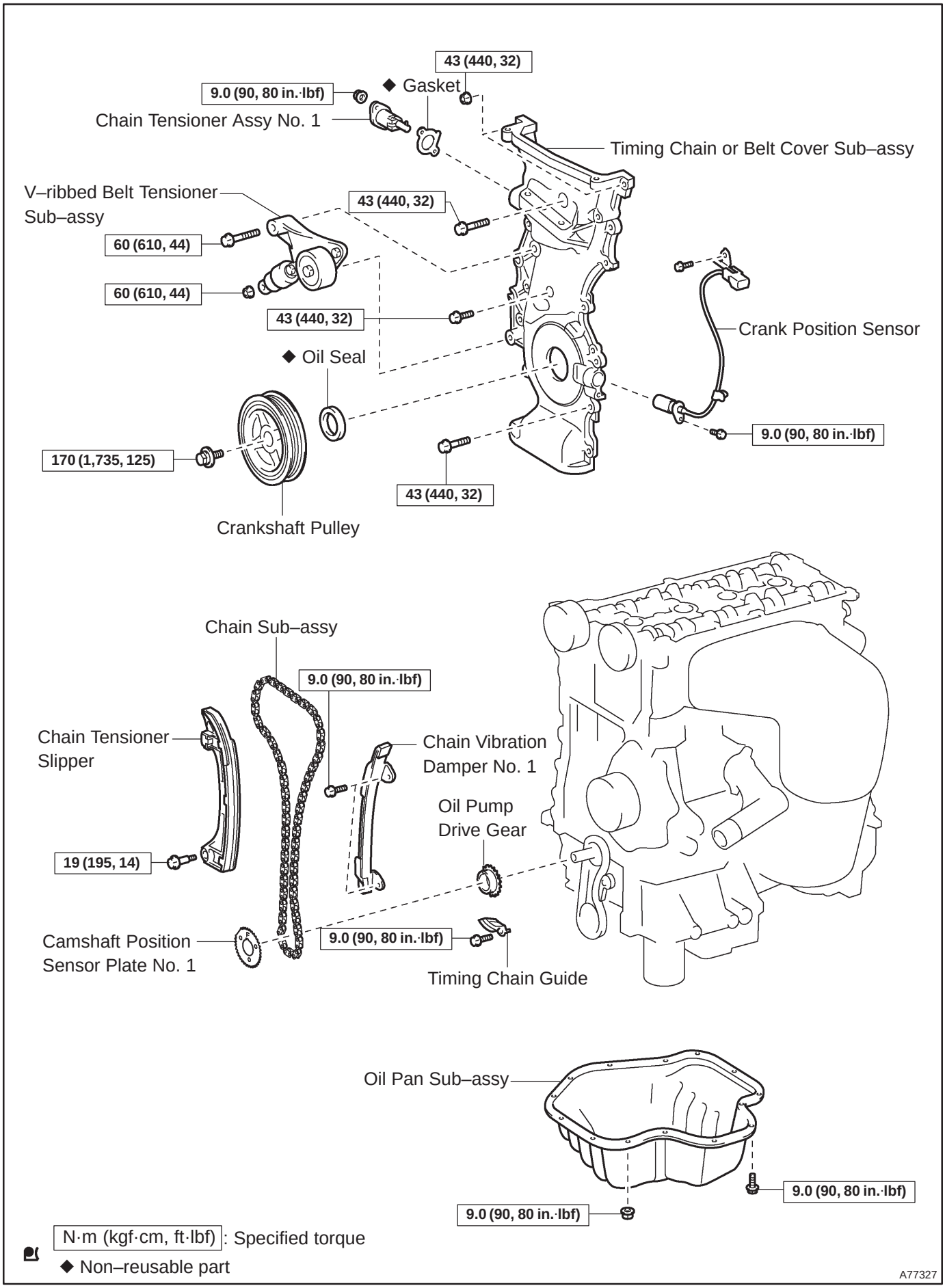


cardiagn.com

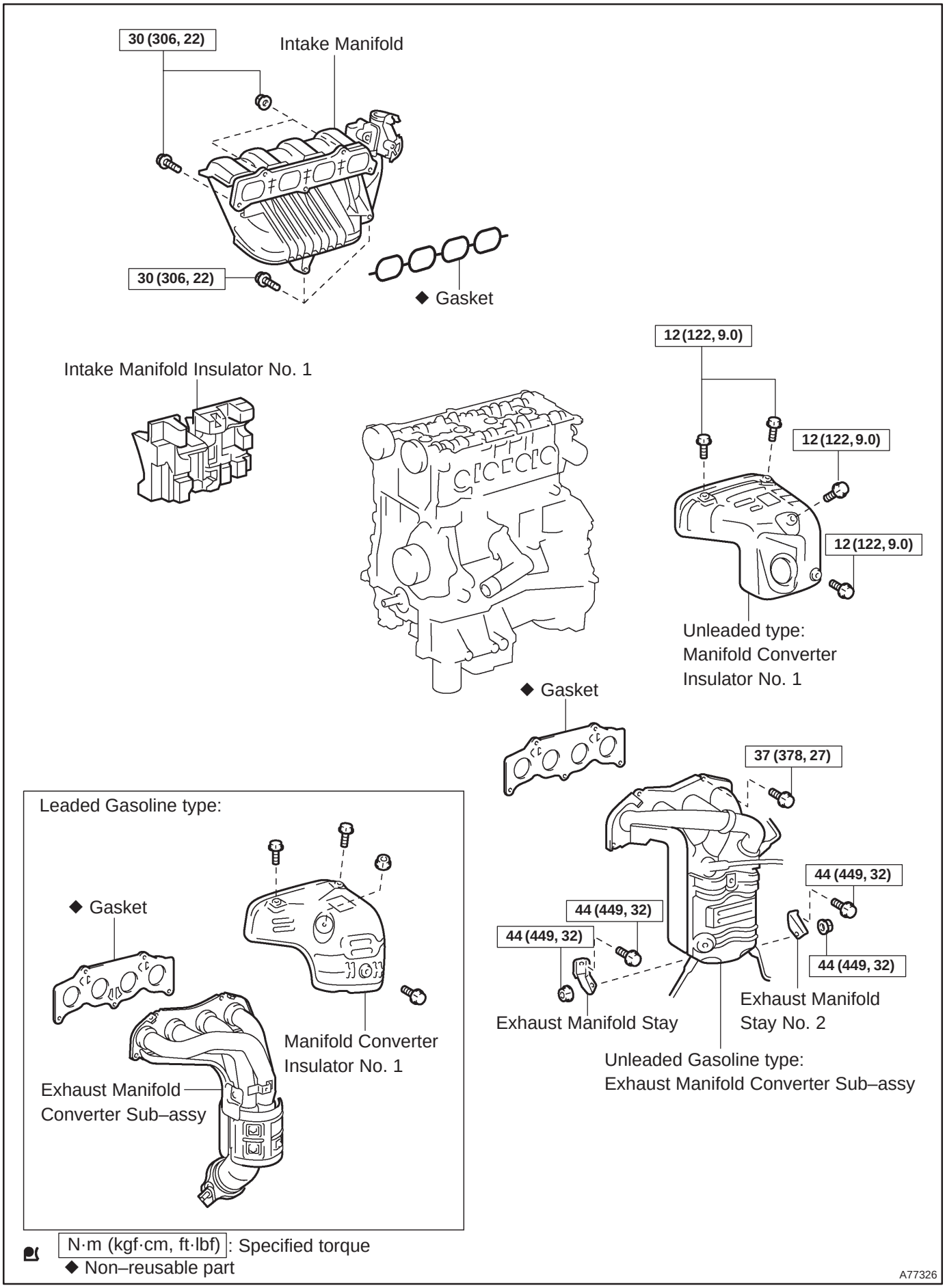


cardiagn.com

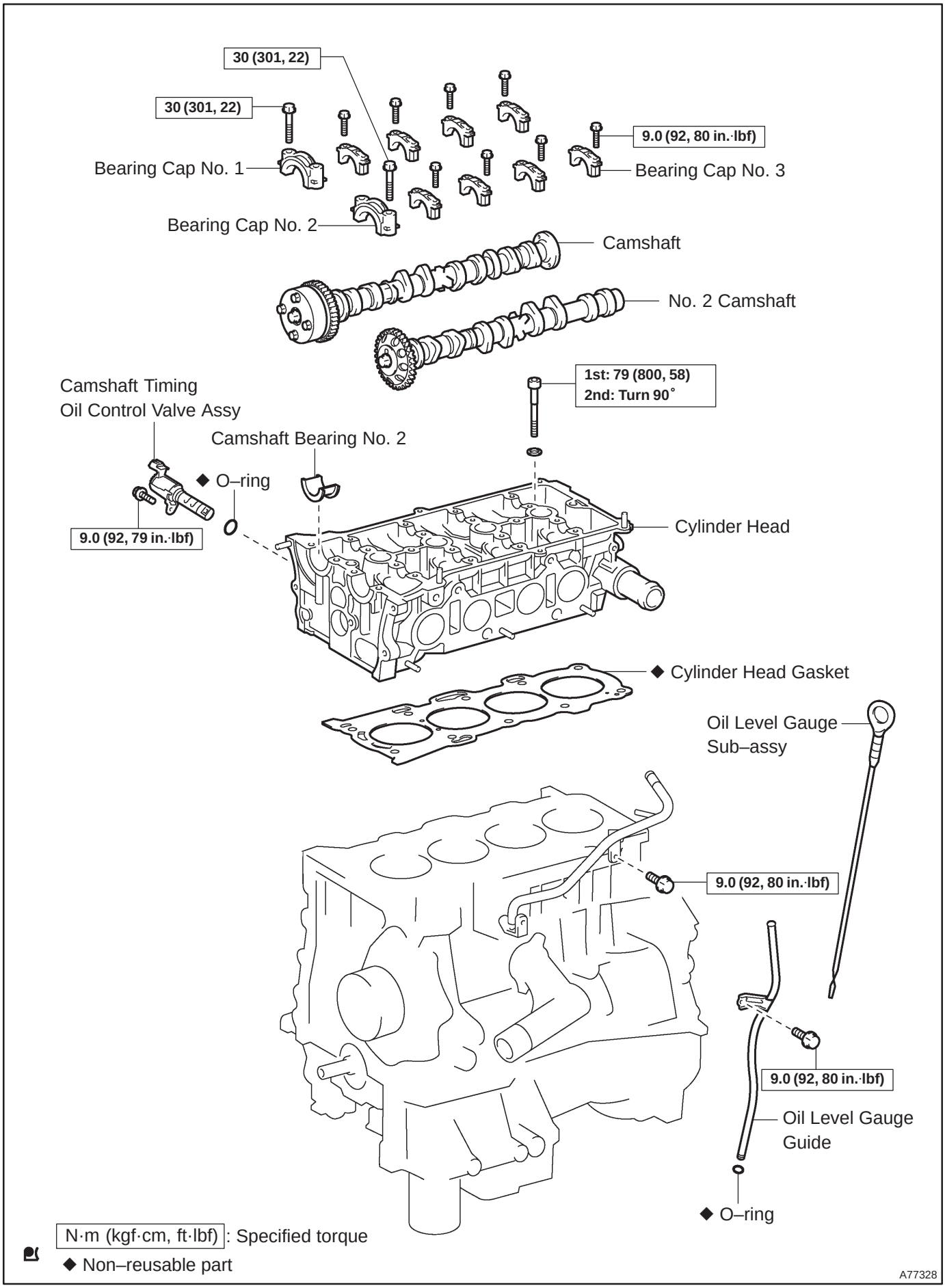


cardiagn.com

141BB–01

# REPLACEMENT

1. **DISCHARGE FUEL SYSTEM PRESSURE (See page 11–15)**
2. **REMOVE FRONT WHEEL RH**
3. **REMOVE RADIATOR SUPPORT OPENING COVER**
4. **REMOVE ENGINE ROOM COVER SIDE**
5. **REMOVE ENGINE UNDER COVER RH**
6. **REMOVE ENGINE UNDER COVER LH**
7. **DRAIN COOLANT (See page 16–19)**
8. **DRAIN ENGINE OIL**

(a) Install a new gasket and the drain plug after draining engine oil.
**Torque: 25 N·m (255 kgf·cm, 18 ft·lbf)**

9. **REMOVE ENGINE COVER SUB–ASSY NO.1 (See page 14–121)**
10. **REMOVE FAN AND GENERATOR V BELT (See page 14–105)**
SST 09249–63010
11. **REMOVE GENERATOR ASSY (See page 19–20)**
12. **REMOVE EXHAUST PIPE ASSY FRONT (See page 15–7)**

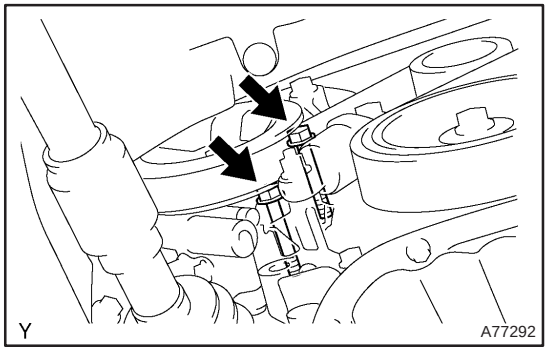


13. **SEPARATE VANE PUMP ASSY**

(a) Remove the 2 bolts and separate the vane pump.

14. **REMOVE IGNITION COIL ASSY**

(a) Remove the 4 bolts and 4 ignition coils.

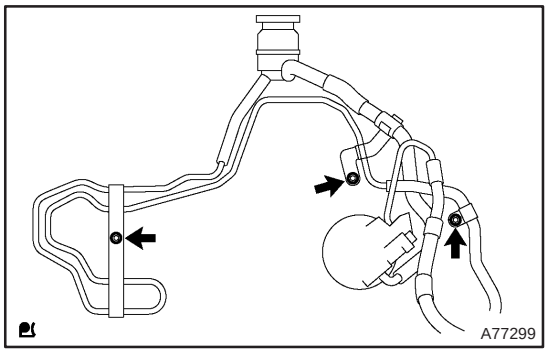


15. **SEPARATE RETURN TUBE SUB–ASSY**

(a) Remove the 3 bolts and separate the return tube as shown in the illustration.

cardiagn.com

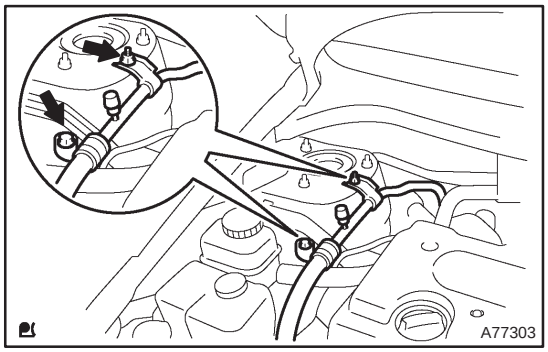


**16. SEPARATE COOLER REFRIGERANT SUCTION HOSE NO.1 (LHD(W/ AIR CONDITIONER) STEERING POSITION TYPE)**

(a) Remove the 2 nuts and separate the suction hose.

**17. SEPARATE VANE PUMP OIL RESERVOIR ASSY**

**NOTICE:**

**Do not disconnect the 2 hoses.**

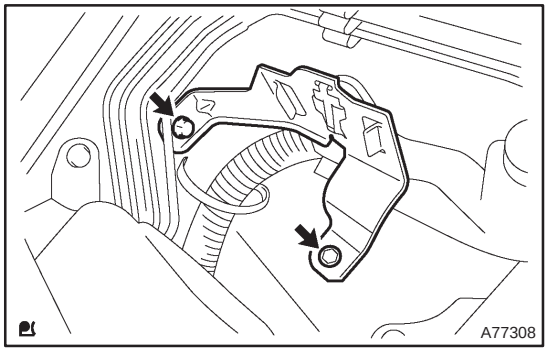


**18. REMOVE OIL RESERVOIR BRACKET NO.1**

(a) Remove the 2 bolts and the oil reservoir bracket No. 1.

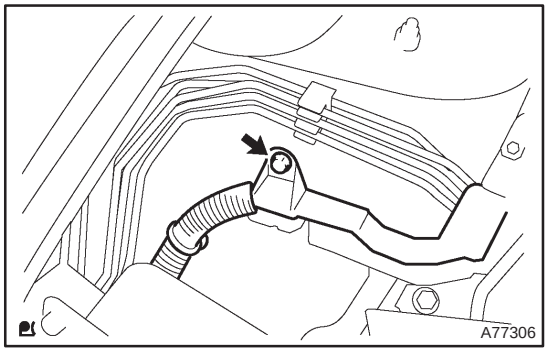


**19. SEPARATE ENGINE WIRE**

(a) Remove the bolt and separate the clamp and the engine wire.

**20. REMOVE ENGINE SERVICE COVER BRACKET RH (W/O AIR CONDITIONING)**

(a) Remove the bolt and the engine service cover bracket RH.

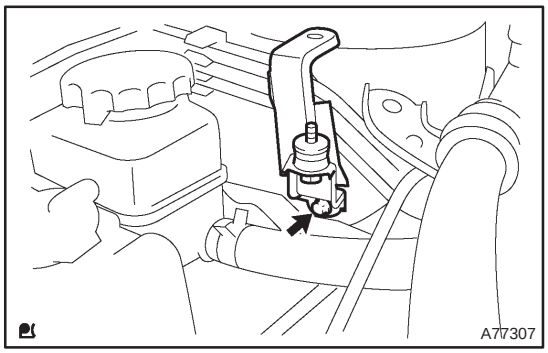


**21. REMOVE COOLER BRACKET (LHD(W/ AIR CONDITIONER) STEERING POSITION TYPE)**

(a) Remove the bolt and the cooler hose bracket.

cardiagn.com

**22. REMOVE ENGINE SERVICE COVER BRACKET RH (RHD(W/ AIR CONDITIONER) STEERING POSITION TYPE)**

(a) Remove the bolt and the engine service cover bracket RH.

**23. REMOVE CYLINDER HEAD COVER SUB–ASSY (See page 14–139)**

**24. SET NO. 1 CYLINDER TO TDC/COMPRESSION (See page 14–139)**

**25. REMOVE ENGINE MOUNTING BRACKET NO.2 RH (See page 14–139)**

**26. REMOVE TRANSVERSE ENGINE ENGINE MOUNTING INSULATOR (See page 14–139)**

**27. REMOVE CRANKSHAFT PULLEY (See page 14–139)**

SST 09213–54015 (91651–60855), 09330–00021, 09950–50013 (09951–05010, 09952–05010, 09953–05020, 09954–05021)

**28. REMOVE CHAIN TENSIONER ASSY NO.1 (See page 14–139)**

**29. REMOVE CRANKSHAFT POSITION SENSOR (See page 18–17)**

**30. REMOVE OIL PAN SUB–ASSY (See page 14–139)**

SST 09032–00100

**31. REMOVE V–RIBBED BELT TENSIONER ASSY (See page 14–139)**

**32. REMOVE TIMING CHAIN OR BELT COVER SUB–ASSY (See page 14–139)**

**33. REMOVE CRANKSHAFT POSITION SENSOR PLATE NO.1**

**34. REMOVE CHAIN TENSIONER SLIPPER**

**35. REMOVE CHAIN VIBRATION DAMPER NO.1**

**36. REMOVE TIMING CHAIN GUIDE (See page 14–139)**

**37. REMOVE CHAIN SUB–ASSY**

**38. REMOVE BATTERY**

**39. REMOVE AIR CLEANER ASSEMBLY WITH HOSE**

(a) Disconnect the 2 connectors.

(b) Disconnect the air cleaner hose from the throttle body.

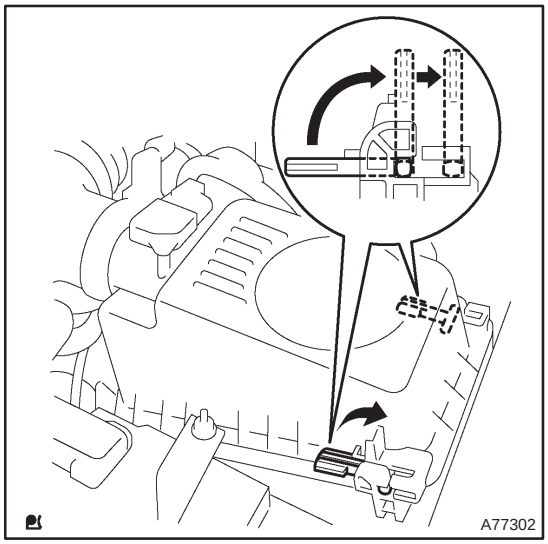


(c) Raise a clamp up, and slide it toward the air cleaner cap, then remove the air cleaner cap from its case.

(d) Remove the air cleaner element.

(e) Remove the 4 bolts and the air cleaner case.

**40. DISCONNECT RADIATOR HOSE INLET**

**41. DISCONNECT UNION TO CONNECTOR TUBE HOSE**

**42. DISCONNECT HEATER INLET WATER HOSE (W/ AIR CONDITIONING)**

**43. SEPARATE FUEL TUBE SUB–ASSY (See page 11–26)**

**44. SEPARATE ENGINE WIRE**



cardiagn.com

**45. REMOVE THROTTLE BODY ASSY (See page 10–26)**

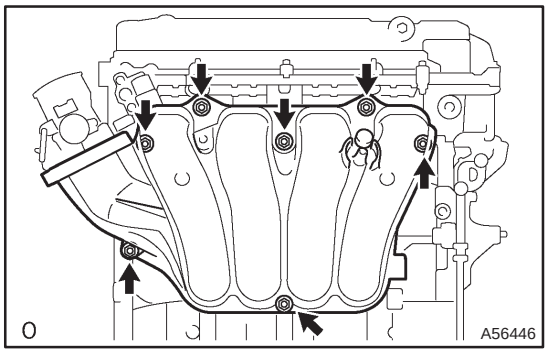


**46. REMOVE INTAKE MANIFOLD**

(a) Remove the 5 bolts and 2 nuts, then remove the intake manifold and gasket.

**47. REMOVE INTAKE MANIFOLD INSULATOR NO.1**

**48. REMOVE MANIFOLD CONVERTER INSULATOR NO.1**

(a) Disconnect the oxygen sensor connector.

(b) Remove the 2 bolts and nut, and then remove the manifold heat insulator.

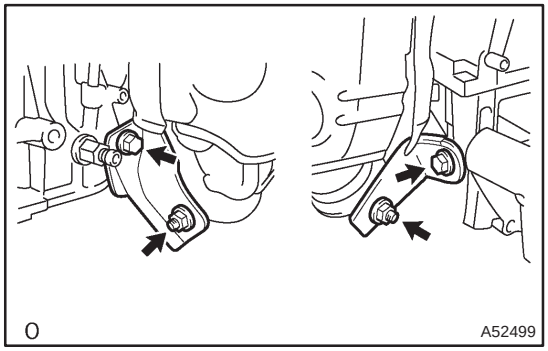


**49. REMOVE EXHAUST MANIFOLD CONVERTER SUB–ASSY**

(a) Remove the 2 bolts and 2 nuts, then detach the No. 1 and No. 2 exhaust manifold stay.

(b) Disconnect the 3 oxygen sensor connectors.

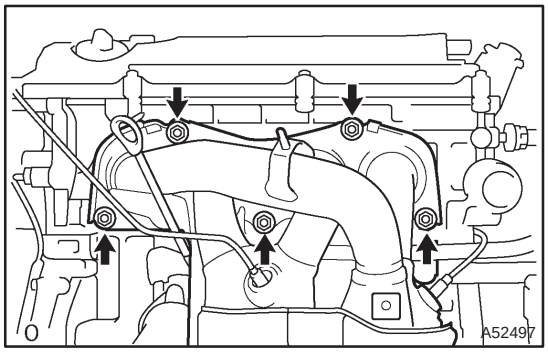


(c) Remove the 5 nuts, the exhaust manifold and gasket.

**50. REMOVE NO.2 CAMSHAFT (See page 14–171)**

**51. REMOVE CAMSHAFT (See page 14–171)**

**52. REMOVE CAMSHAFT TIMING OIL CONTROL VALVE ASSY (W/ VVT–i)**

(a) Remove the bolt and the oil control valve.

cardiagn.com

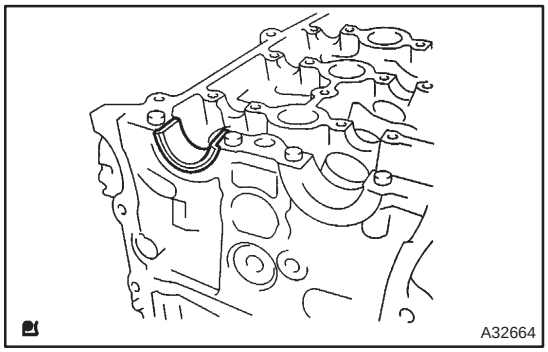


**53. REMOVE CAMSHAFT BEARING NO.2**

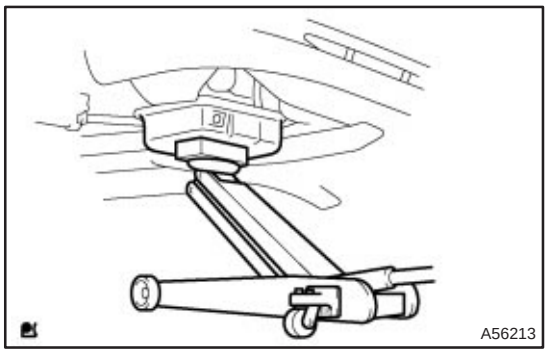


**54. SUPPORT ENGINE ASSEMBLY WITH TRANSAXLE**

(a) Install the oil pan sub–assy.

(b) Set the jack under the engine assembly w/ transaxle, and place a wooden block on the jack.

(c) Remove the chain block and sling devise.

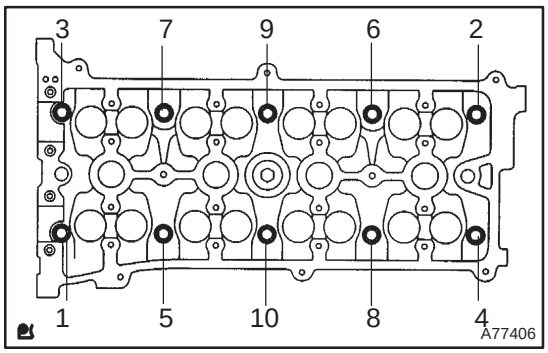


**55. REMOVE CYLINDER HEAD SUB–ASSY**

(a) Using several steps, loosen the 10 cylinder head bolts, with 10 mm bi–hexagon wrench uniformly in the sequence shown in the illustration.

(b) Remove the 10 cylinder head bolts and plate washers.

**NOTICE:**

- **Be careful not to drop washers into the cylinder head.**
- **Head warpage or cranking could result from removing bolts and installing in incorrect order.**

**56. REMOVE CYLINDER HEAD GASKET**

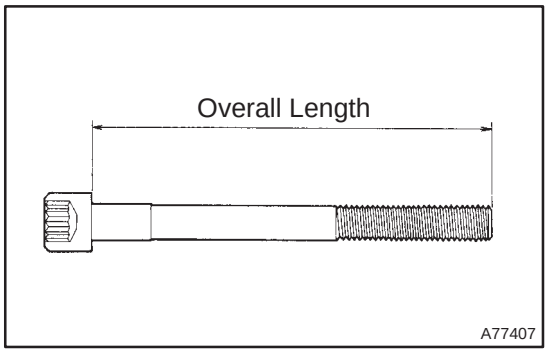


**57. INSPECT CYLINDER HEAD SET BOLT**

(a) Using a vernier calipers, measure the length of the cylinder head set bolts from the seat to the end.

**Standard bolt length:**
**161.3 to 162.3 mm (6.350 to 6.390 in.)**
**Maximum bolt length: 164.2 mm (6.465 in.)**

If the length is greater than maximum, replace the cylinder head set bolts.

cardiagn.com

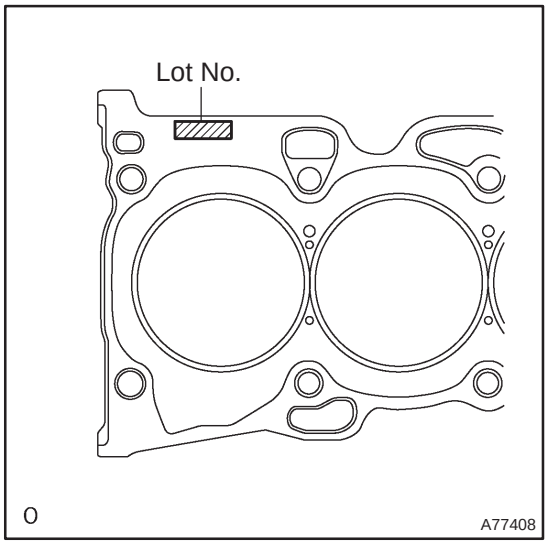


**58. INSTALL CYLINDER HEAD GASKET**

(a) Place a new cylinder head gasket on the cylinder block surface with the Lot No. stamp upward.

**NOTICE:**

- **Remove any oil from contact surface.**
- **Be careful of the installation direction.**
- **Place the cylinder head gently in order not to damage the gasket with the bottom part of the head.**

**59. INSTALL CYLINDER HEAD SUB–ASSY**

HINT:

The cylinder head set bolts are tightened in 2 successive steps.

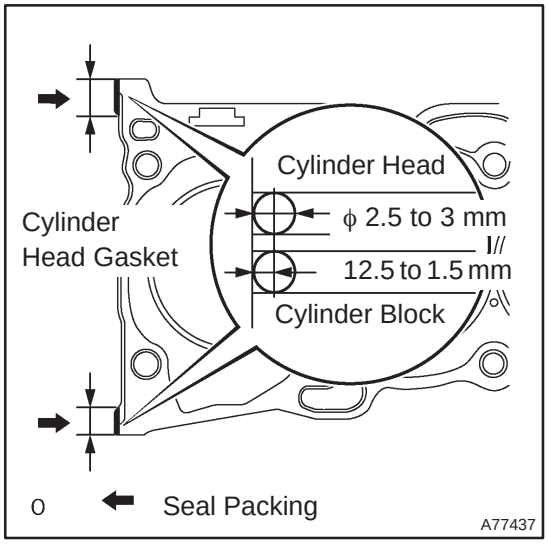


(a) Apply a continuous bead (Diameter 2.5 to 3 mm (0.098 to 0.118 in.)) of seal packing as shown in the illustration.
**Seal packing: Part No. 08826–00080 or equivalent**

**NOTICE:**

- **Remove any oil from contact surface.**
- **Install the cylinder head within 3 minutes after applying seal packing.**
- **After installing the cylinder head, cylinder head bolts must be tightened within 15 minutes.**
- **Do not start the engine within 2 hours after installing.**

(b) Apply a light coat of engine oil on the threads of the cylinder head bolts.

(c) Install the bolts and plate washers to the cylinder head.

**NOTICE:**

**Do not drop the washers into the cylinder head.**

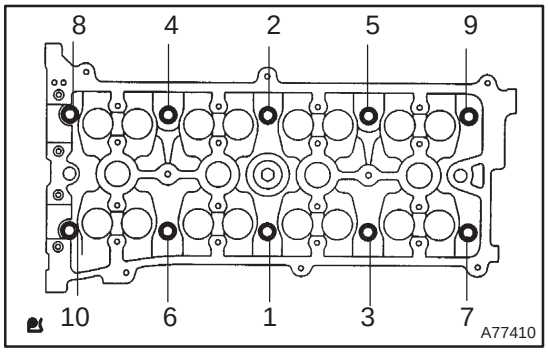


(d) Using several steps, install and tighten the 10 cylinder head bolts and plate washers with a 10 mm bi–hexagon wrench uniformly, in the sequence shown in the illustration.
**Torque: 79 N·m (806 kgf·cm, 58 ft·lbf)**

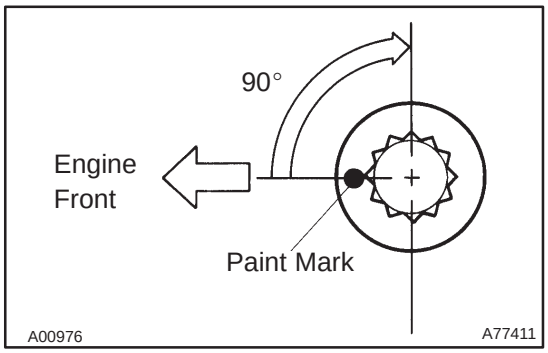


(e) Mark the front side of the cylinder head set bolts with paint.

(f) Retighten the cylinder head set bolts by 90° in the same sequence as step (A).

(g) Check that each paint mark is now at a 90° angle to the front.

cardiagn.com

**60. INSTALL CAMSHAFT TIMING OIL CONTROL VALVE ASSY (W/ VVT–i)**

(a) Install a light coat of the engine oil to the new O–ring and install it to the oil control valve.

(b) Install the oil control valve with the bolt.
**Torque: 9.0 N·m (92 kgf·cm, 79 in.·lbf)**

**61. INSTALL CAMSHAFT (See page 14–171)**

**62. INSTALL NO.2 CAMSHAFT (See page 14–171)**

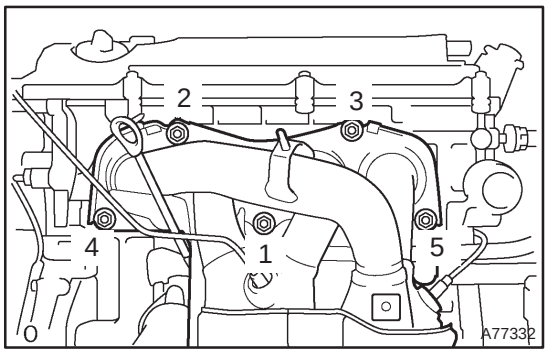


**63. INSTALL EXHAUST MANIFOLD CONVERTER SUB–ASSY**

(a) Install a new gasket and the exhaust manifold with the 5 nuts.
**Torque: 37 N·m (378 kgf·cm, 27 ft·lbf)**

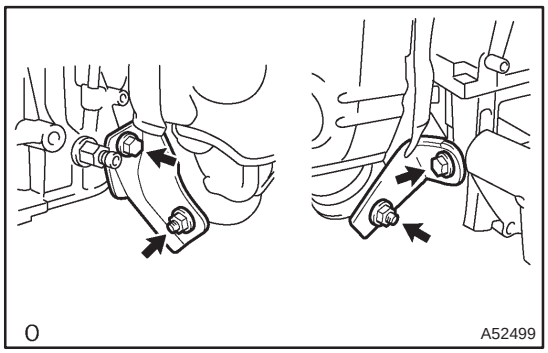


(b) Install the No. 1 and No. 2 exhaust manifold stay with the 2 bolts and 2 nuts.
**Torque: 44 N·m (449 kgf·cm, 32 ft·lbf)**

**64. INSTALL EXHAUST MANIFOLD HEAT INSULATOR NO.1**
**Torque: 12 N·m (122 kgf·cm, 9.0 ft·lbf)**

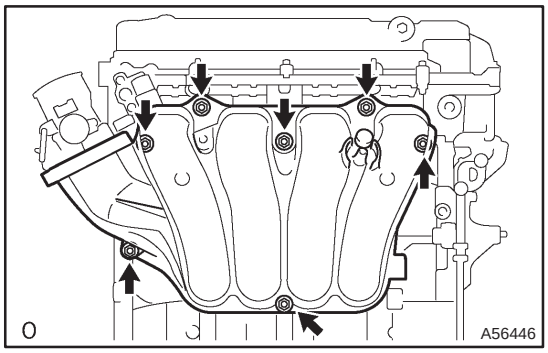


**65. INSTALL INTAKE MANIFOLD**

(a) Install a new gasket and the intake manifold with the 5 bolts and 2 nuts.
**Torque: 30 N·m (306 kgf·cm, 22 ft·lbf)**

**66. INSTALL THROTTLE BODY ASSY (See page 10–26)**

**67. INSTALL FUEL TUBE SUB–ASSY (See page 11–19)**

**68. INSTALL AIR CLEANER ASSEMBLY WITH HOSE**
**Torque: 5.0 N·m (51 kgf·cm, 44 in.·lbf)**

cardiagn.com

69. **INSTALL CHAIN VIBRATION DAMPER NO.1**
**Torque: 9.0 N·m (92 kgf·cm, 80 in.·lbf)**
70. **INSTALL CHAIN SUB–ASSY (See page 14–139)**
71. **INSTALL TIMING CHAIN GUIDE**
**Torque: 9.0 N·m (92 kgf·cm, 80 in.·lbf)**
72. **INSTALL CHAIN TENSIONER SLIPPER**
**Torque: 19 N·m (195 kgf·cm, 15 ft·lbf)**
73. **INSTALL CRANKSHAFT POSITION SENSOR PLATE NO.1 (See page 14–171)**
74. **INSTALL TIMING CHAIN OR BELT COVER SUB–ASSY (See page 14–139)**
75. **INSTALL V–RIBBED BELT TENSIONER ASSY (See page 14–139)**
76. **INSTALL OIL PAN SUB–ASSY (See page 14–139)**
77. **INSTALL CRANKSHAFT POSITION SENSOR (See page 18–17)**
78. **INSTALL CRANKSHAFT PULLEY (See page 14–139)**
SST 09213–54015 (91651–60855), 09330–00021
79. **INSTALL CHAIN TENSIONER ASSY NO.1 (See page 14–139)**
80. **INSTALL TRANSVERSE ENGINE ENGINE MOUNTING INSULATOR**
**Torque: 52 N·m (530 kgf·cm, 38 ft·lbf)**
81. **INSTALL ENGINE MOUNTING BRACKET NO.2 RH (See page 14–139)**
82. **INSTALL CYLINDER HEAD COVER SUB–ASSY (See page 14–139)**
83. **INSTALL ENGINE SERVICE COVER BRACKET RH (W/O AIR CONDITIONING)**
**Torque: 9.0 N·m (92 kgf·cm, 80 in.·lbf)**
84. **INSTALL COOLER BRACKET (LHD(W/ AIR CONDITIONER) STEERING POSITION TYPE)**
**Torque: 9.0 N·m (92 kgf·cm, 80 in.·lbf)**
85. **INSTALL ENGINE SERVICE COVER BRACKET RH (RHD(W/ AIR CONDITIONER) STEERING POSITION TYPE)**
**Torque: 9.0 N·m (92 kgf·cm, 80 in.·lbf)**
86. **INSTALL ENGINE WIRE**
87. **INSTALL OIL RESERVOIR BRACKET NO.1**
**Torque: 8.0 N·m (82 kgf·cm, 71 in.·lbf)**
88. **INSTALL COOLER REFRIGERANT SUCTION HOSE NO.1 (LHD(W/ AIR CONDITIONER) STEERING POSITION TYPE)**
89. **INSTALL RETURN TUBE SUB–ASSY**
**Torque: 8.0 N·m (82 kgf·cm, 71 in.·lbf)**
90. **INSTALL IGNITION COIL ASSY**
**Torque: 9.0 N·m (92 kgf·cm, 80 in.·lbf)**
91. **INSTALL ENGINE COVER SUB–ASSY NO.1**
**Torque: 7.0 N·m (71 kgf·cm, 62 in.·lbf)**
92. **INSTALL VANE PUMP ASSY**
**Torque: 37 N·m (377 kgf·cm, 27 ft·lbf)**
93. **INSTALL EXHAUST PIPE ASSY FRONT (See page 15–7)**
94. **INSTALL GENERATOR ASSY (See page 19–20)**
95. **INSTALL FAN AND GENERATOR V BELT (See page 14–105)**
SST 09249–63010
96. **ADD COOLANT (See page 16–19)**
97. **ADD ENGINE OIL**
98. **CHECK FOR ENGINE COOLANT LEAKS (See page 16–13)**
99. **CHECK FOR ENGINE OIL LEAKS**
100. **CHECK FOR FUEL LEAKS**
101. **INSTALL FRONT WHEEL RH**
**Torque: 103 N·m (1,050 kgf·cm, 76 ft·lbf)**



cardiagn.com

141BO–01

# REPLACEMENT

1. **DISCHARGE FUEL SYSTEM PRESSURE (See page 11–15)**
2. **REMOVE FRONT WHEEL RH**
3. **REMOVE RADIATOR SUPPORT OPENING COVER**
4. **REMOVE ENGINE ROOM COVER SIDE**
5. **REMOVE ENGINE UNDER COVER RH**
6. **REMOVE ENGINE UNDER COVER LH**
7. **DRAIN COOLANT (See page 16–19)**
8. **DRAIN ENGINE OIL**

(a) Install a new gasket and the drain plug after draining engine oil.
**Torque: 25 N·m (255 kgf·cm, 18 ft·lbf)**

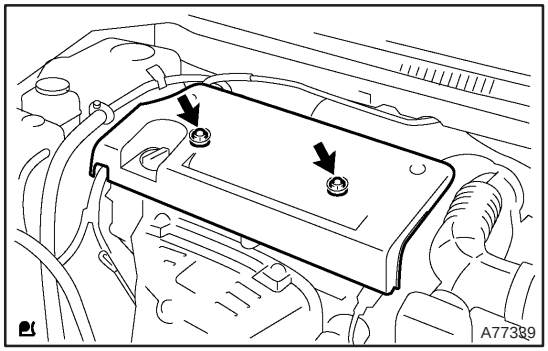


9. **REMOVE ENGINE COVER SUB–ASSY NO.1**

(a) Remove the 2 nuts and the engine cover No. 1.

10. **REMOVE FUEL PRESSURE PULSATION DAMPER ASSY**
11. **SEPARATE FUEL TUBE SUB–ASSY (See page 11–33)**
12. **REMOVE FUEL PIPE SUB–ASSY NO.1 (See page 11–52)**
    SST 09023–12900
13. **REMOVE FUEL PUMP ASSY (See page 11–52)**
14. **REMOVE FAN AND GENERATOR V BELT (See page 14–185)**
    SST 09249–63010
15. **REMOVE GENERATOR ASSY (See page 19–20)**
16. **REMOVE EXHAUST PIPE ASSY FRONT (See page 15–7)**

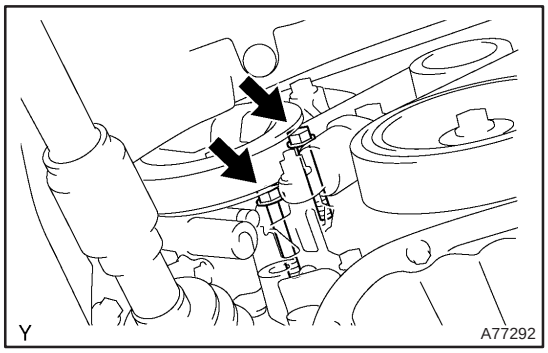


17. **SEPARATE VANE PUMP ASSY**

(a) Remove the 2 bolts and separate the vane pump.

18. **REMOVE IGNITION COIL ASSY**

(a) Remove the 4 bolts and 4 ignition coils.

cardiagn.com

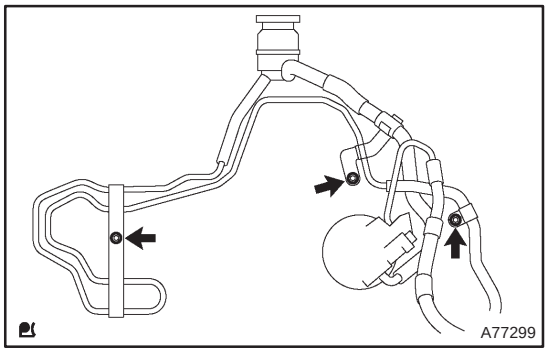


**19. SEPARATE RETURN TUBE SUB–ASSY**

(a) Remove the 3 bolts and separate the return tube shown in the illustration.

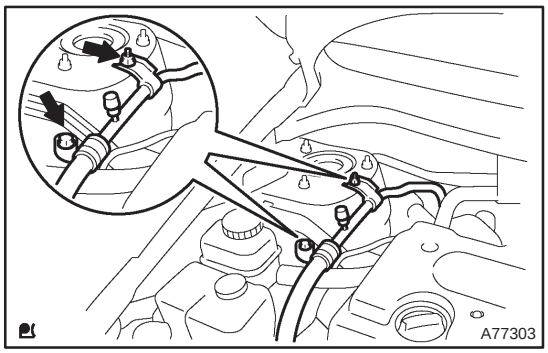


**20. SEPARATE COOLER REFRIGERANT SUCTION HOSE NO.1 (LHD STEERING POSITION TYPE)**

(a) Remove the 2 nuts and separate the suction hose.

**21. SEPARATE VANE PUMP OIL RESERVOIR ASSY**

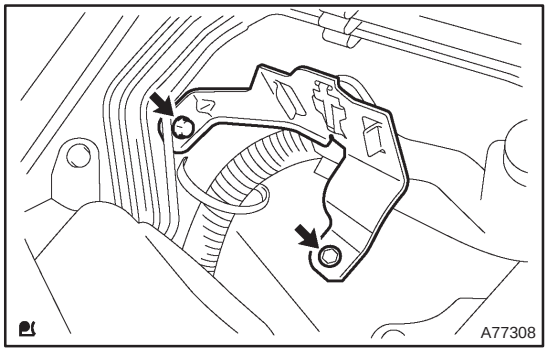


**22. REMOVE OIL RESERVOIR BRACKET NO.1**

(a) Remove the 2 bolts and the oil reservoir bracket No. 1.

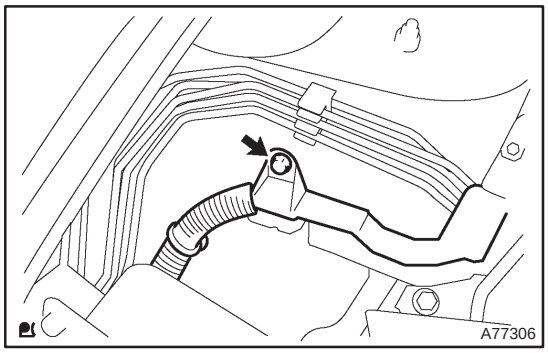


**23. SEPARATE ENGINE WIRE**

(a) Remove the bolt and separate a clamp and the engine wire.

cardiagn.com

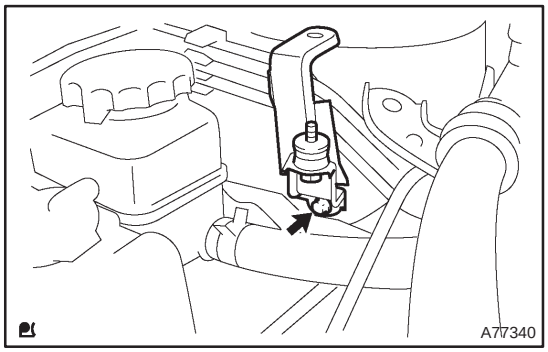


**24. REMOVE COOLER BRACKET (LHD STEERING POSITION TYPE)**

(a) Remove the bolt and the cooler bracket.

**25. REMOVE ENGINE SERVICE COVER BRACKET RH (RHD STEERING POSITION TYPE)**

(a) Remove the bolt and the engine service cover bracket RH.

**26. REMOVE CYLINDER HEAD COVER SUB–ASSY (See page 14–222)**

**27. SET NO. 1 CYLINDER TO TDC/COMPRESSION (See page 14–222)**

**28. REMOVE ENGINE MOUNTING BRACKET NO.2 RH (See page 14–222)**

**29. REMOVE TRANSVERSE ENGINE ENGINE MOUNTING INSULATOR (See page 14–222)**

**30. REMOVE CRANKSHAFT PULLEY (See page 14–222)**

SST 09213–54015 (91651–60855), 09330–00021, 09950–50013 (09951–05010, 09952–05010, 09953–05020, 09954–05021)

**31. REMOVE CHAIN TENSIONER ASSY NO.1 (See page 14–222)**

**32. REMOVE CRANKSHAFT POSITION SENSOR (See page 18–17)**

**33. REMOVE OIL PAN SUB–ASSY (See page 14–222)**

SST 09032–00100

**34. REMOVE V–RIBBED BELT TENSIONER ASSY (See page 14–222)**

**35. REMOVE TIMING CHAIN OR BELT COVER SUB–ASSY (See page 14–222)**

**36. REMOVE CRANKSHAFT POSITION SENSOR PLATE NO.1 (See page 14–222)**

**37. REMOVE CHAIN TENSIONER SLIPPER**

**38. REMOVE CHAIN VIBRATION DAMPER NO.1**

**39. REMOVE TIMING CHAIN GUIDE (See page 14–222)**

**40. REMOVE CHAIN SUB–ASSY**

**41. REMOVE BATTERY**

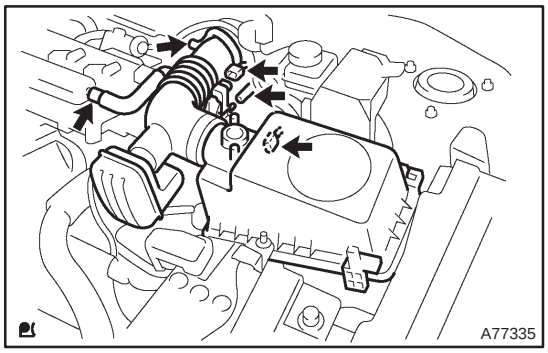


**42. REMOVE AIR CLEANER ASSEMBLY WITH HOSE**

(a) Disconnect the 2 connectors.

(b) Disconnect the 2 vacuum hoses.

(c) Disconnect the ventilation hose.

(d) Disconnect the air cleaner hose from the throttle body.

cardiagn.com

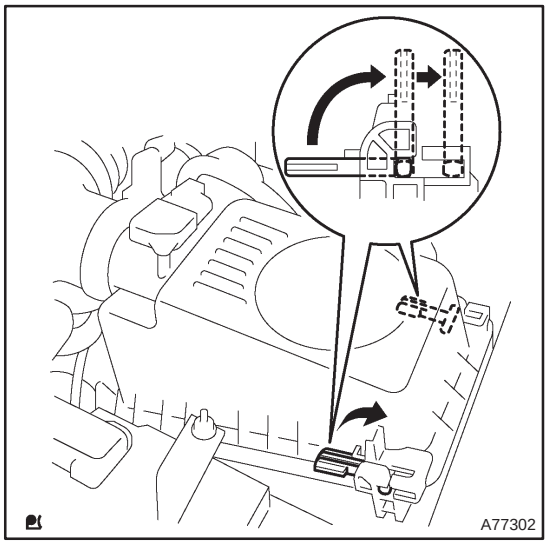


(e) Raise a clamp up, and slide it toward the air cleaner cap, then remove the air cleaner cap from its case.
(f) Remove the air cleaner element.
(g) Remove the 4 bolts and the air cleaner case.

**43. DISCONNECT RADIATOR HOSE INLET**
**44. DISCONNECT UNION TO CONNECTOR TUBE HOSE**
**45. DISCONNECT HEATER INLET WATER HOSE**
**46. SEPARATE FUEL TUBE SUB–ASSY**
**47. SEPARATE ENGINE WIRE**
**48. REMOVE THROTTLE BODY ASSY (See page 10–44)**
**49. REMOVE CHARCOAL CANISTER ASSY**

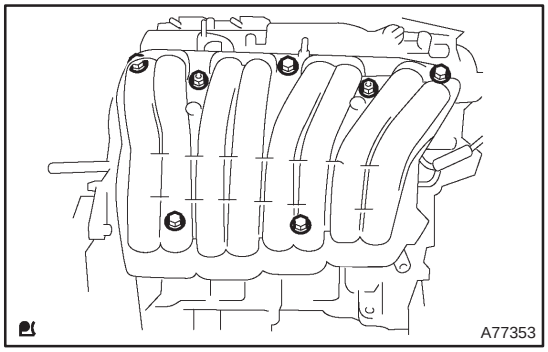


**50. REMOVE INTAKE MANIFOLD**
(a) Remove the 5 bolts and 2 nuts.
(b) Disconnect the 2 vacuum hoses.
(c) Remove the 2 stud bolts.
(d) Remove the intake manifold and insulator.

**51. REMOVE INTAKE AIR CONTROL VALVE ASSY**
(a) Remove the intake air control valve and gasket.
**52. REMOVE MANIFOLD CONVERTER INSULATOR NO.1**
(a) Disconnect the oxygen sensor connector.
(b) Remove the 2 bolts and nut, and then remove the manifold insulator.

cardiagn.com

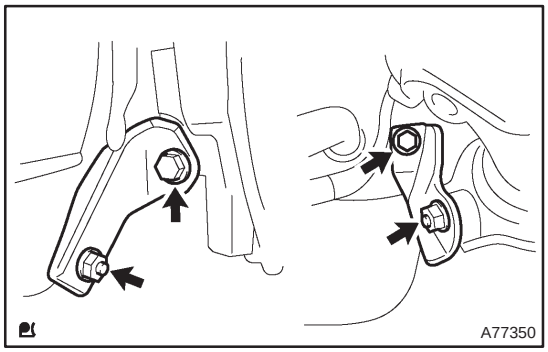


**53. REMOVE EXHAUST MANIFOLD CONVERTER SUB–ASSY**

(a) Remove the 2 bolts and 2 nuts, and then detach the No. 1 and No. 2 exhaust manifold stay.

(b) Disconnect the 3 oxygen sensor connectors.

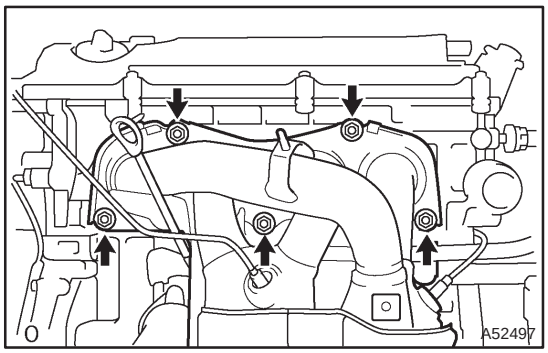


(c) Remove the 5 nuts, the exhaust manifold and gasket.

**54. REMOVE NO.2 CAMSHAFT (See page 14–240)**

**55. REMOVE CAMSHAFT (See page 14–240)**

**56. REMOVE CAMSHAFT TIMING OIL CONTROL VALVE ASSY**

(a) Remove the bolt and the oil control valve.

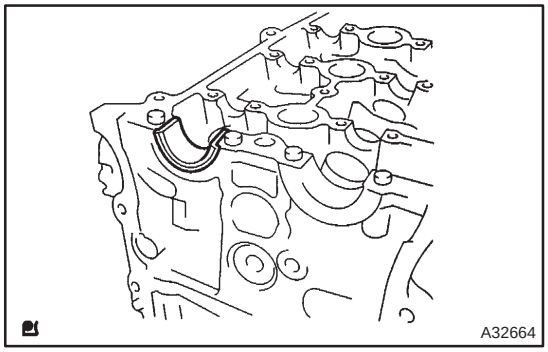


**57. REMOVE CAMSHAFT BEARING NO.2**

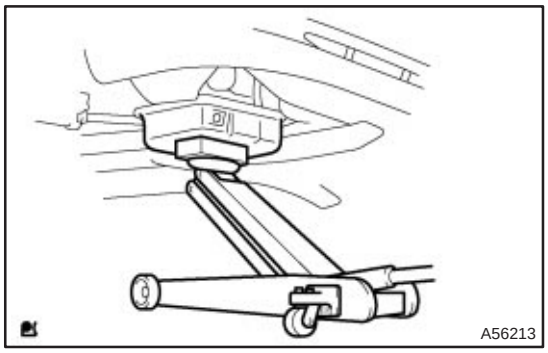


**58. SUPPORT ENGINE ASSEMBLY WITH TRANSAXLE**

(a) Install the oil pan sub–assy.

(b) Set the jack under the engine assembly w/ transaxle, and place a wooden block on the jack.

(c) Remove the chain block and sling devise.

cardiagn.com

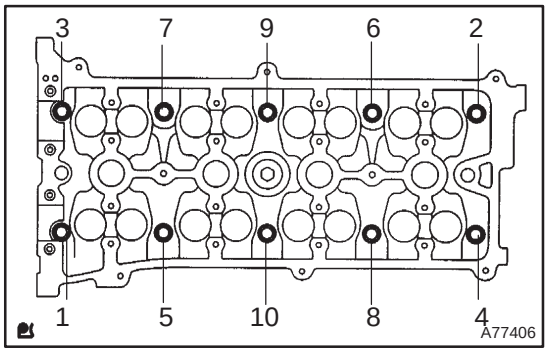


**59. REMOVE CYLINDER HEAD SUB–ASSY**

(a) Using several steps, loosen the 10 cylinder head bolts, with 10 mm bi–hexagon wrench uniformly in the sequence shown in the illustration.

(b) Remove 10 cylinder head bolts and plate washers.

**NOTICE:**

- **Be careful not to drop washers into the cylinder head.**
- **Head warpage or cranking could result from removing bolts and installing incorrect order.**

**60. REMOVE CYLINDER HEAD GASKET**

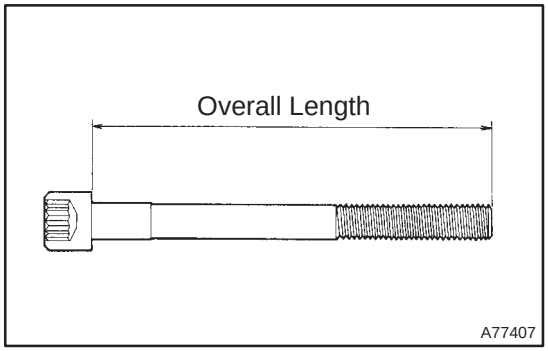


**61. INSPECT CYLINDER HEAD SET BOLT**

(a) Using a vernier calipers, measure the length of the cylinder head set bolts from the seat to the end.

**Standard bolt length:**
**161.3 to 162.3 mm (6.350 to 6.390 in.)**
**Maximum bolt length: 164.2 mm (6.465 in.)**

If the length is greater than maximum, replace the cylinder head set bolts.

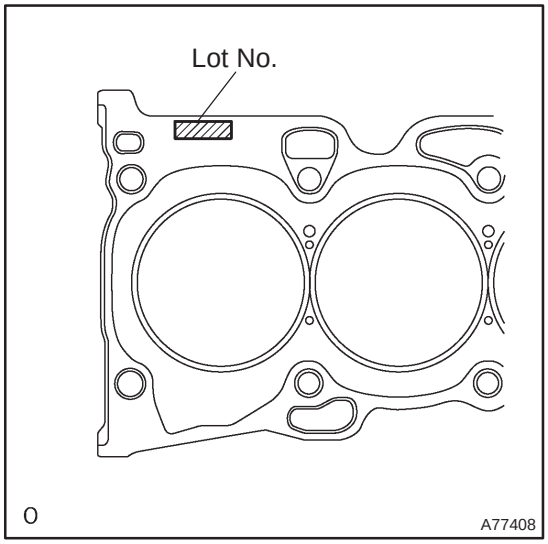


**62. INSTALL CYLINDER HEAD GASKET**

(a) Place a new cylinder head gasket on the cylinder block surface with the Lot No. stamp upward.

**NOTICE:**

- **Remove any oil from contact surface.**
- **Be careful of the installation direction.**
- **Place the cylinder head gently in order not to damage the gasket with the bottom part of the head.**

**63. INSTALL CYLINDER HEAD SUB–ASSY**

HINT:

The cylinder head set bolts are tightened in 2 successive steps.

cardiagn.com

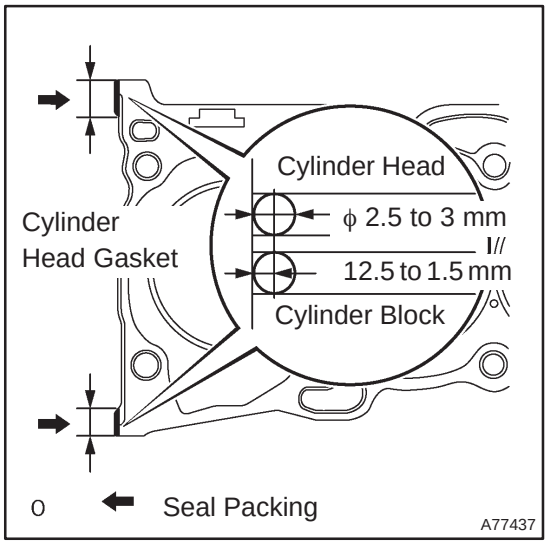


(a) Apply a continuous bead (Diameter 2.5 to 3 mm (0.098 to 0.118 in.)) of seal packing as shown in the illustration.
**Seal packing: Part No. 08826–00080 or equivalent**

**NOTICE:**

- **Remove any oil from contact surface.**
- **Install the cylinder head within 3 minutes after applying seal packing.**
- **After installing the cylinder head, cylinder head bolts must be tightened within 15 minutes.**
- **Do not start the engine within 2 hours after installing.**

(b) Apply a light coat of engine oil on the threads of the cylinder head bolts.

(c) Install bolts and plate washers to the cylinder head.

**NOTICE:**

**Do not drop the washers into the cylinder head.**

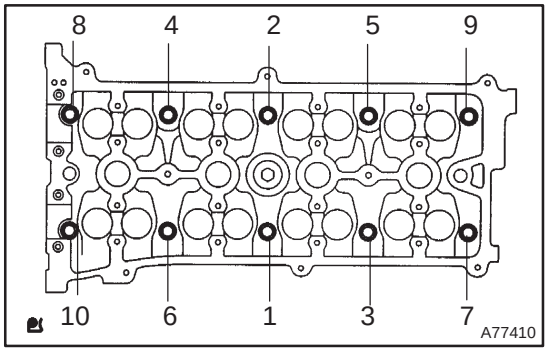


(d) Using several steps, install and tighten the 10 cylinder head bolts and plate washers with a 10 mm bi–hexagon wrench uniformly, in the sequence shown in the illustration.
**Torque: 79 N·m (806 kgf·cm, 58 ft·lbf)**

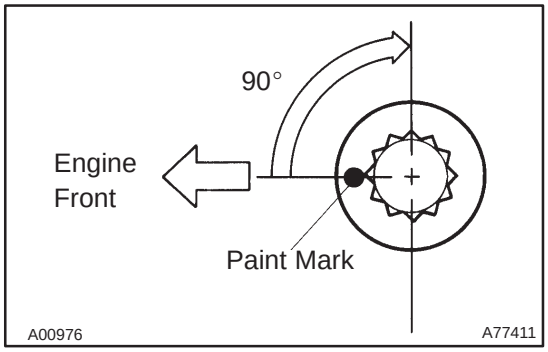


(e) Mark the front side of the cylinder head set bolts with paint.

(f) Retighten the cylinder head set bolts by 90° in the same sequence as a step (d).

(g) Check that each paint mark is now at a 90° angle to the front.

**64. INSTALL CAMSHAFT TIMING OIL CONTROL VALVE ASSY**

(a) Install a light coat of the engine oil to the new O–ring and install it to the oil control valve.

(b) Install the oil control valve with the bolt.
**Torque: 9.0 N·m (92 kgf·cm, 79 in.·lbf)**

**65. INSTALL CAMSHAFT (See page 14–240)**

**66. INSTALL NO.2 CAMSHAFT (See page 14–240)**

cardiagn.com

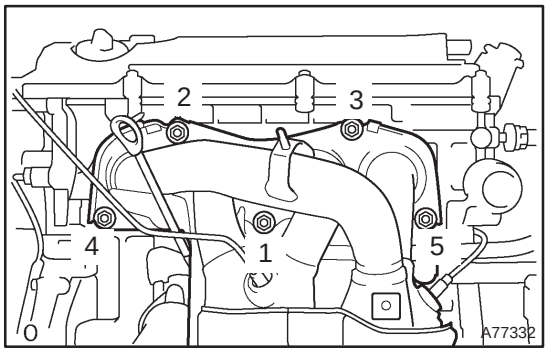


**67. INSTALL EXHAUST MANIFOLD CONVERTER SUB–ASSY**

(a) Install a new gasket and the exhaust manifold with the 5 nuts.
**Torque: 37 N·m (378 kgf·cm, 27 ft·lbf)**

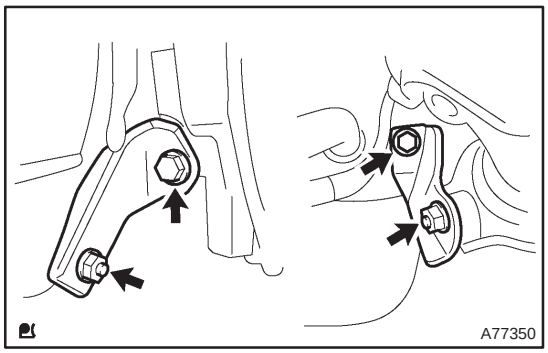


(b) Install the No. 1 and No. 2 exhaust manifold stays with the 2 bolts and 2 nuts.
**Torque: 44 N·m (449 kgf·cm, 32 ft·lbf)**

**68. INSTALL EXHAUST MANIFOLD HEAT INSULATOR NO.1**
**Torque: 12 N·m (122 kgf·cm, 9.0 ft·lbf)**

**69. INSTALL INTAKE AIR CONTROL VALVE ASSY**

(a) Install a new gasket and the intake air control valve.

**70. INSTALL INTAKE MANIFOLD**

(a) Install the 2 stud bolts.
**Torque: 10 N·m (97 kgf·cm, 84 in.·lbf)**

(b) Install the intake manifold and insulator with the 5 bolts and 2 nuts.
**Torque: 30 N·m (306 kgf·cm, 22 ft·lbf)**

**71. INSTALL THROTTLE BODY ASSY (See page 10–44)**

**72. INSTALL AIR CLEANER ASSEMBLY WITH HOSE**
**Torque: 5.0 N·m (51 kgf·cm, 44 in.·lbf)**

**73. INSTALL CHAIN VIBRATION DAMPER NO.1**
**Torque: 9.0 N·m (92 kgf·cm, 80 in.·lbf)**

**74. INSTALL CHAIN SUB–ASSY (See page 14–222)**

**75. INSTALL TIMING CHAIN GUIDE**
**Torque: 9.0 N·m (92 kgf·cm, 80 in.·lbf)**

**76. INSTALL CHAIN TENSIONER SLIPPER**
**Torque: 19 N·m (195 kgf·cm, 15 ft·lbf)**

**77. INSTALL CRANKSHAFT POSITION SENSOR PLATE NO.1 (See page 14–240)**

**78. INSTALL TIMING CHAIN OR BELT COVER SUB–ASSY (See page 14–222)**

**79. INSTALL V–RIBBED BELT TENSIONER ASSY (See page 14–222)**

**80. INSTALL OIL PAN SUB–ASSY (See page 14–222)**

**81. INSTALL CRANKSHAFT POSITION SENSOR (See page 18–17)**

**82. INSTALL CRANKSHAFT PULLEY (See page 14–222)**
SST 09213–54015 (91651–60855), 09330–00021

**83. INSTALL CHAIN TENSIONER ASSY NO.1 (See page 14–222)**

**84. INSTALL TRANSVERSE ENGINE ENGINE MOUNTING INSULATOR**
**Torque: 52 N·m (530 kgf·cm, 38 ft·lbf)**

**85. INSTALL ENGINE MOUNTING BRACKET NO.2 RH (See page 14–222)**



cardiagn.com

**86. INSTALL CYLINDER HEAD COVER SUB–ASSY (See page 14–222)**
**87. INSTALL COOLER BRACKET (LHD STEERING POSITION TYPE)**
**Torque: 9.0 N·m (92 kgf·cm, 80 in.·lbf)**
**88. INSTALL ENGINE SERVICE COVER BRACKET RH (RHD STEERING POSITION TYPE)**
**Torque: 9.0 N·m (92 kgf·cm, 80 in.·lbf)**
**89. INSTALL OIL RESERVOIR BRACKET NO.1**
**Torque: 8.0 N·m (82 kgf·cm, 71 in.·lbf)**
**90. INSTALL COOLER REFRIGERANT SUCTION HOSE NO.1 (LHD STEERING POSITION TYPE)**
**91. INSTALL RETURN TUBE SUB–ASSY**
**Torque: 8.0 N·m (82 kgf·cm, 71 in.·lbf)**
**92. INSTALL IGNITION COIL ASSY**
**Torque: 9.0 N·m (92 kgf·cm, 80 in.·lbf)**
**93. INSTALL FUEL PUMP ASSY (See page 11–52)**
**94. INSTALL FUEL PIPE SUB–ASSY NO.1 (See page 11–52)**
SST 09023–12900
**95. INSTALL FUEL TUBE SUB–ASSY (See page 11–33)**
**96. INSTALL FUEL PRESSURE PULSATION DAMPER ASSY (See page 11–52)**
**97. INSTALL ENGINE COVER SUB–ASSY NO.1**
**Torque: 7.0 N·m (71 kgf·cm, 62 in.·lbf)**
**98. INSTALL VANE PUMP ASSY**
**Torque: 37 N·m (377 kgf·cm, 27 ft·lbf)**
**99. INSTALL EXHAUST PIPE ASSY FRONT (See page 15–7)**
**100. INSTALL GENERATOR ASSY (See page 19–20)**
**101. INSTALL FAN AND GENERATOR V BELT (See page 14–185)**
SST 09249–63010
**102. ADD COOLANT (See page 16–31)**
**103. ADD ENGINE OIL**
**104. CHECK FOR ENGINE COOLANT LEAKS (See page 16–25)**
**105. CHECK FOR ENGINE OIL LEAKS**
**106. CHECK FOR FUEL LEAKS**
**107. INSTALL FRONT WHEEL RH**
**Torque: 103 N·m (1,050 kgf·cm, 76 ft·lbf)**

cardiagn.com

# CYLINDER HEAD GASKET (1CD–FTV)

141C9–01

## COMPONENTS

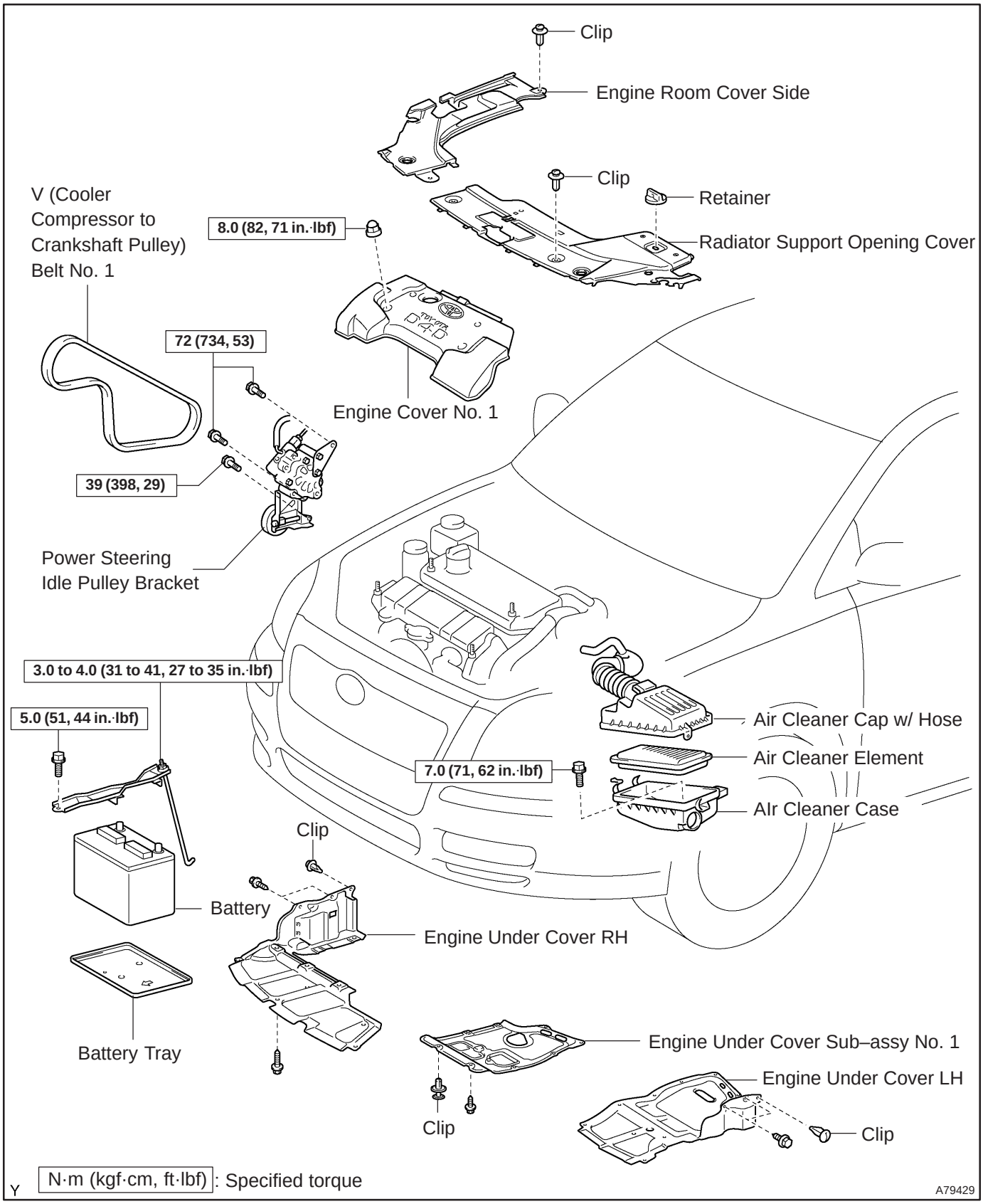


cardiagn.com

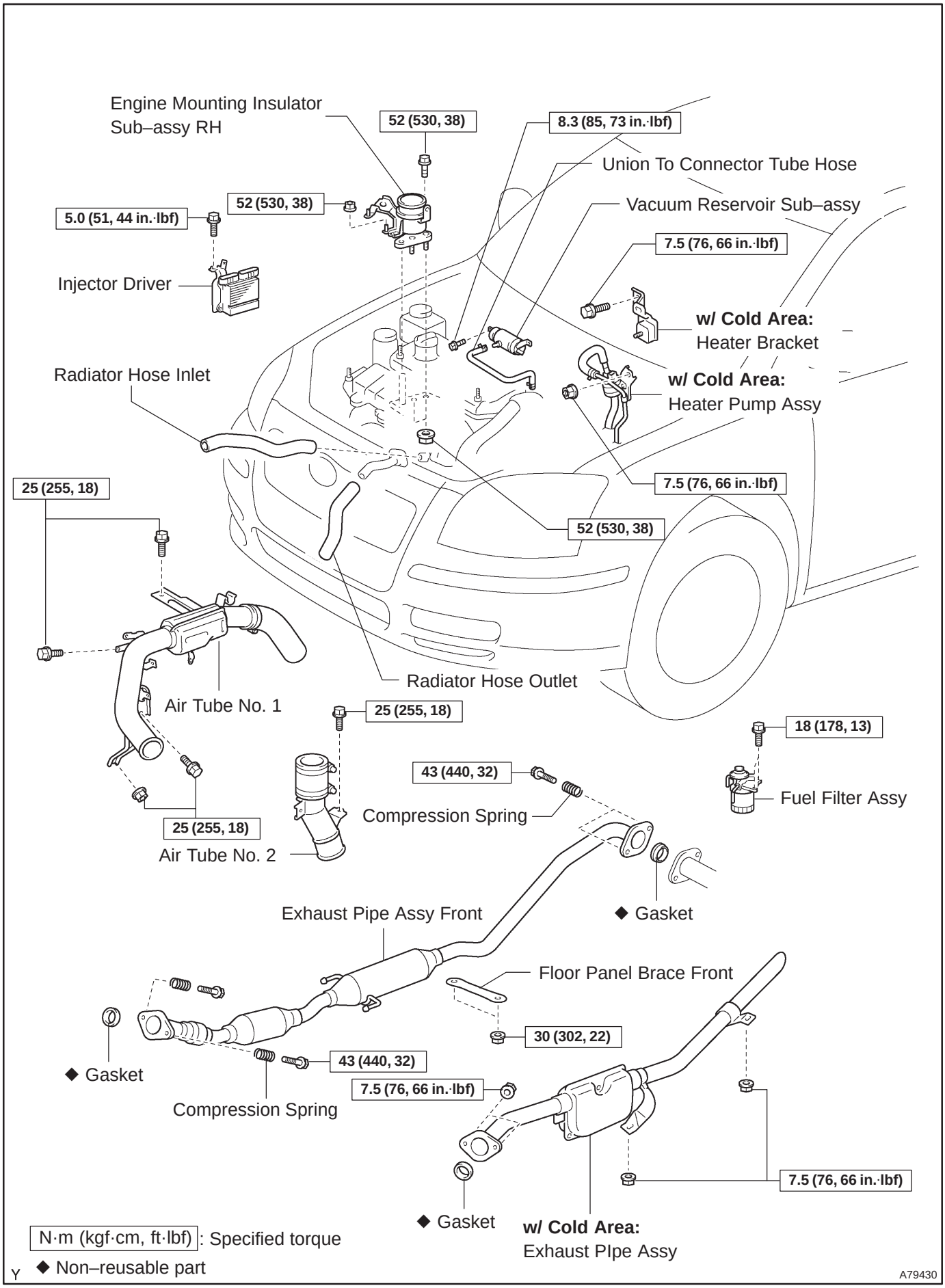


cardiagn.com

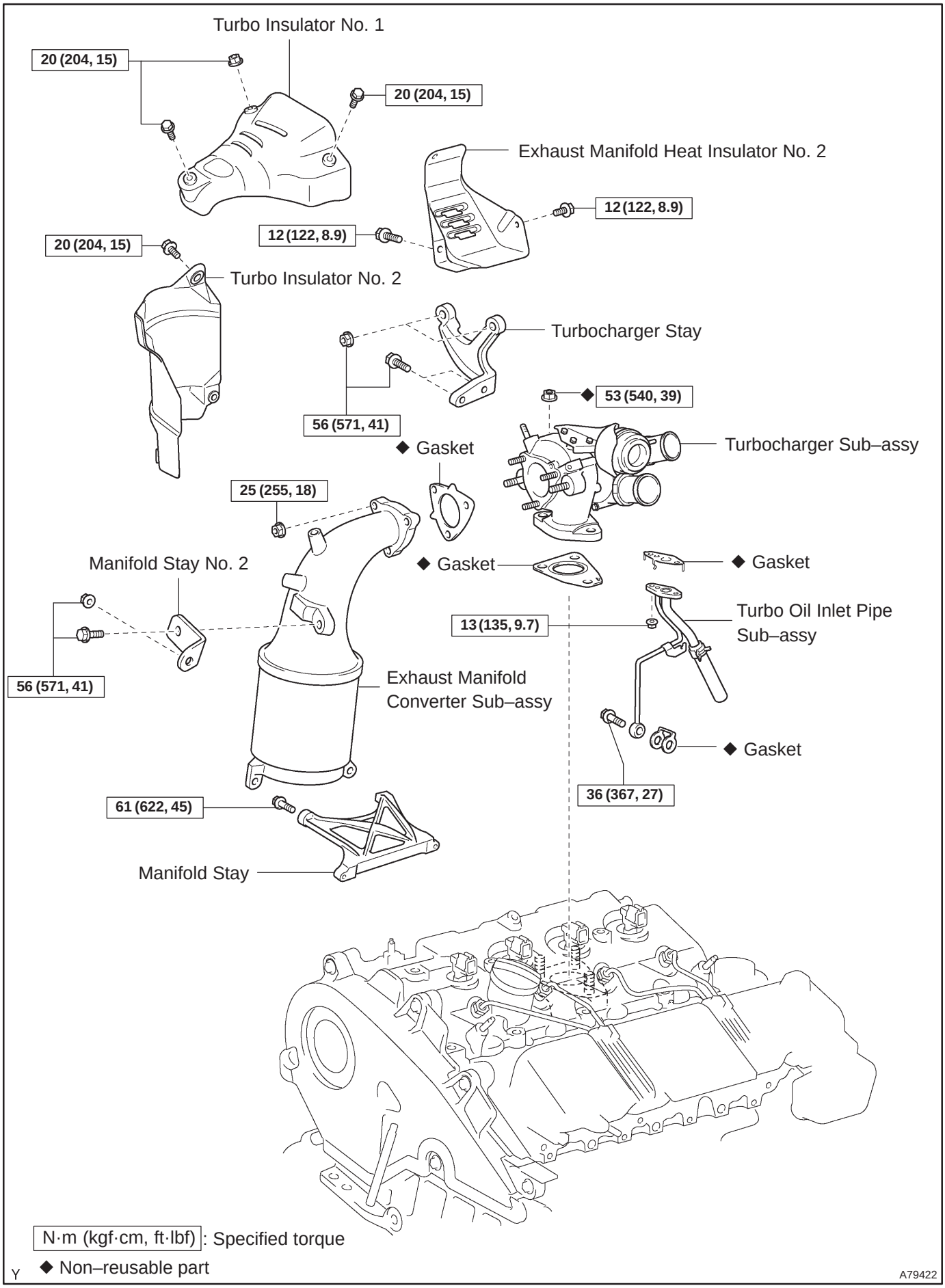


cardiagn.com

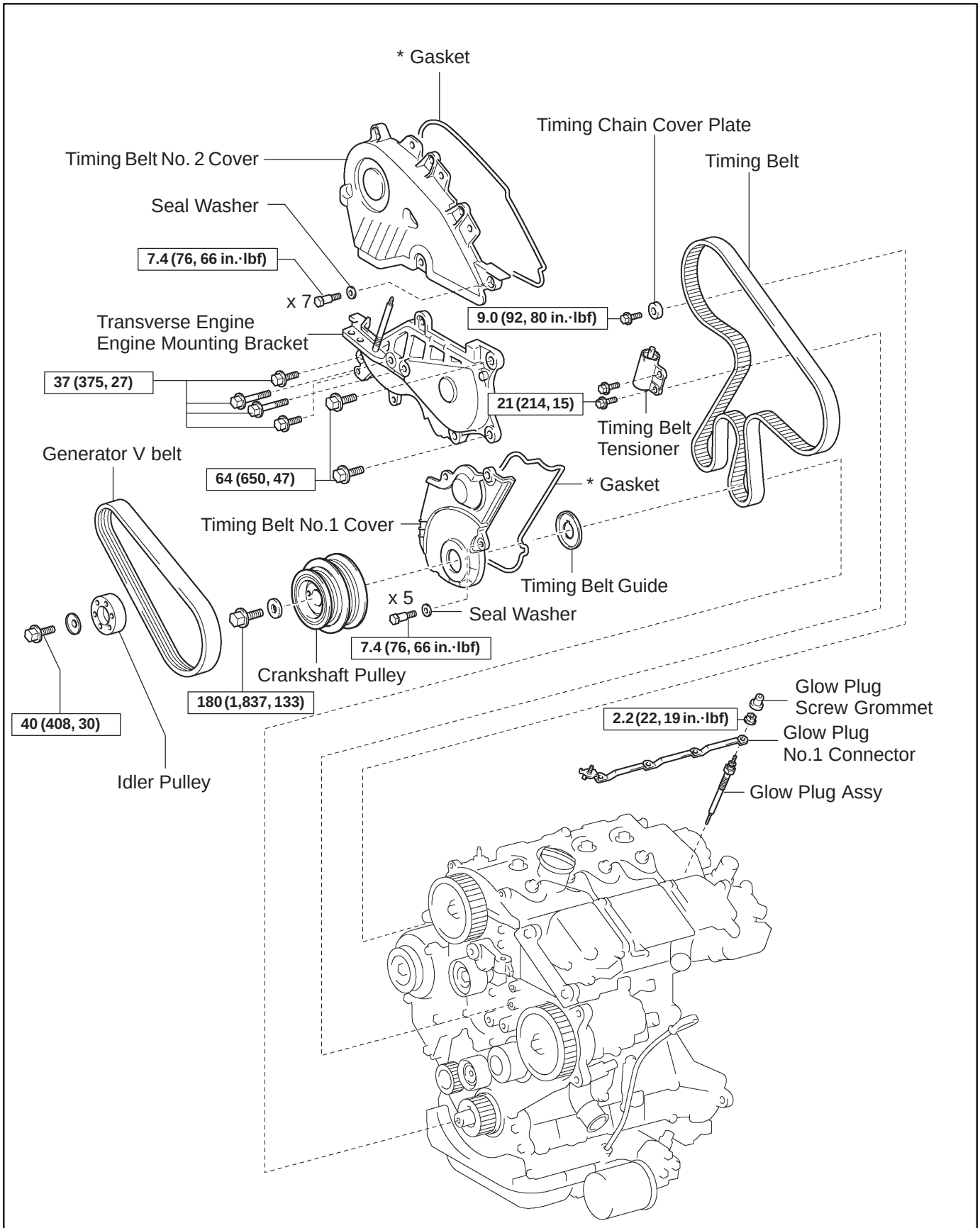


N·m (kgf·cm, ft·lbf) : Specified torque

* Replace only if damaged

A61211



cardiagn.com

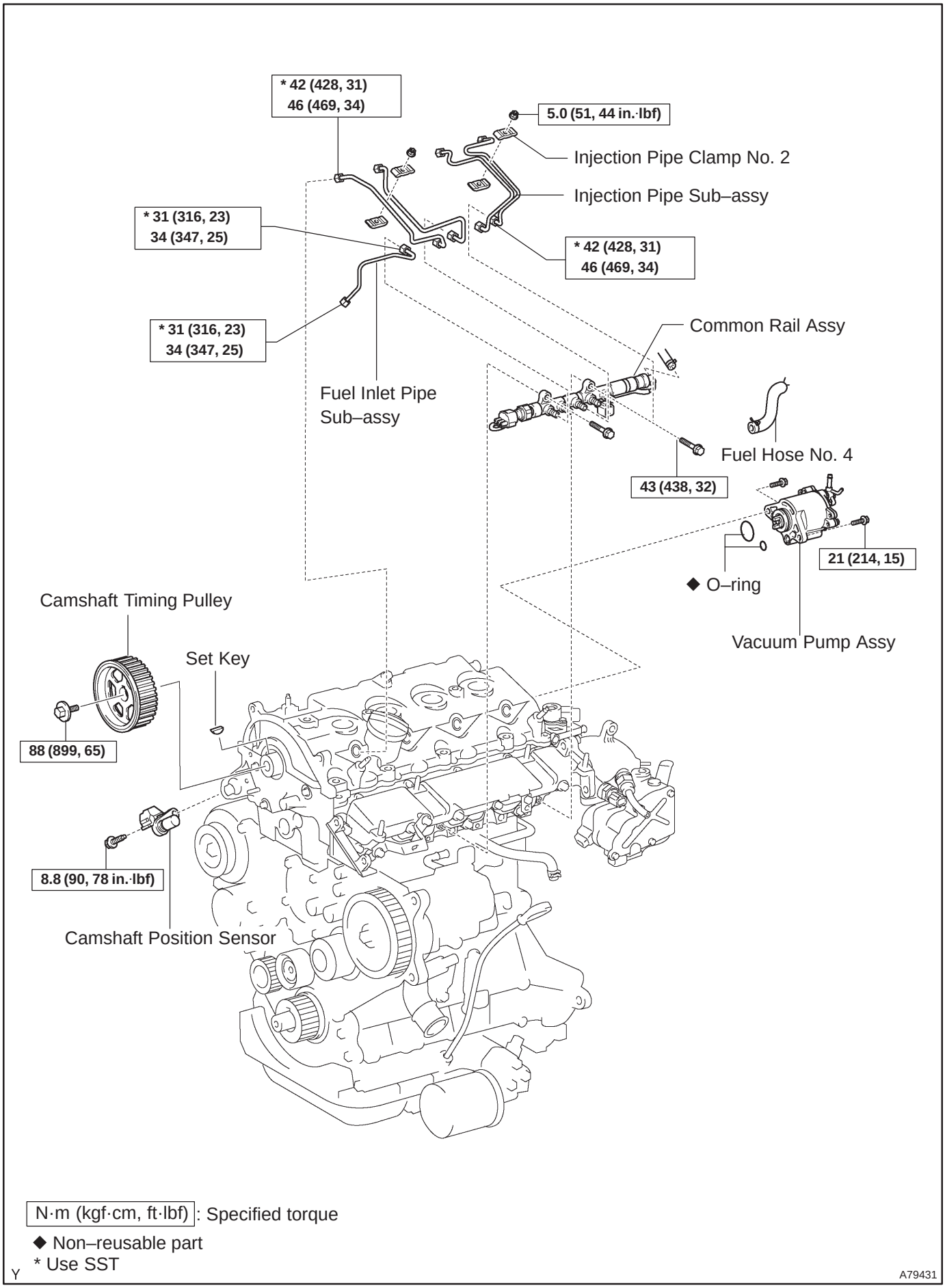


cardiagn.com

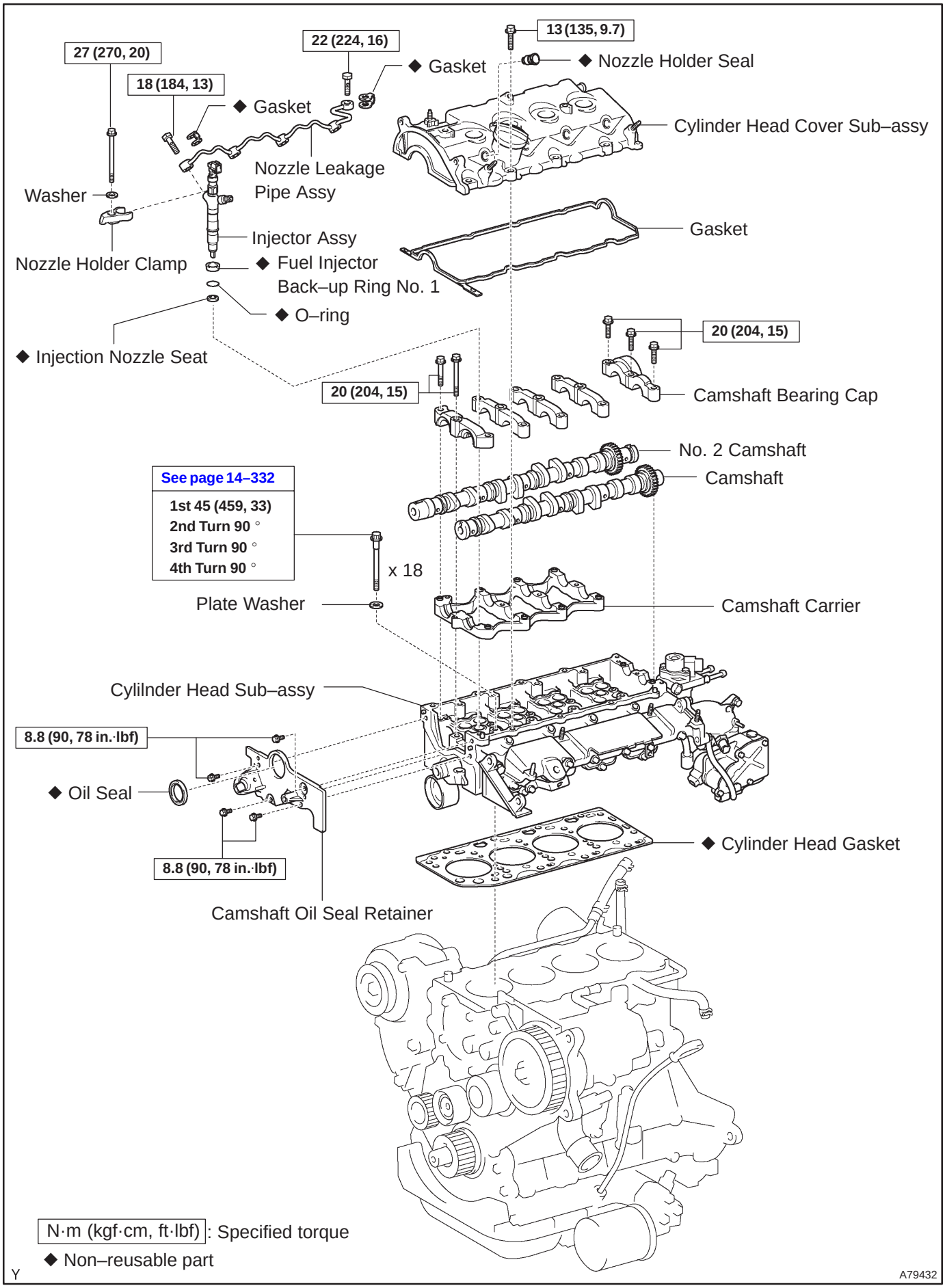


cardiagn.com

141CA–01

# REPLACEMENT

1. **REMOVE FRONT WHEEL RH**
2. **REMOVE ENGINE UNDER COVER LH**
3. **REMOVE ENGINE UNDER COVER SUB–ASSY NO.1**
4. **REMOVE ENGINE UNDER COVER RH**
5. **DRAIN ENGINE COOLANT (See page 16–44)**
6. **DRAIN ENGINE OIL (See page 14–342)**
7. **REMOVE RADIATOR SUPPORT OPENING COVER**
8. **REMOVE ENGINE ROOM COVER SIDE**
9. **REMOVE ENGINE COVER NO.1**

(a) Remove the 5 nuts and the engine cover.

10. **REMOVE VACUUM RESERVOIR SUB–ASSY (See page 13–11)**
11. **REMOVE AIR CLEANER ASSY (See page 14–286)**
12. **REMOVE BATTERY**
13. **REMOVE AIR TUBE NO.2 (See page 14–286)**
14. **REMOVE AIR TUBE NO.1 (See page 14–270)**
15. **REMOVE INJECTOR DRIVER (See page 14–286)**
16. **REMOVE V (COOLER COMPRESSOR TO CRANKSHAFT PULLEY) BELT NO.1 (See page 14–269)**
17. **REMOVE GENERATOR V BELT (See page 14–269)**
18. **SEPARATE POWER STEERING IDLE PULLEY BRACKET (See page 14–286)**
19. **REMOVE ENGINE MOUNTING INSULATOR SUB–ASSY RH (See page 14–307)**
20. **REMOVE CRANKSHAFT PULLEY (See page 14–307)**

    SST 09213–54015 (90105–08076), 09330–00021, 09950–50013 (09951–05010, 09952–05010, 09953–05020, 09954–05031)

21. **REMOVE IDLER PULLEY SUB–ASSY (See page 14–307)**
22. **REMOVE TIMING BELT NO.2 COVER (See page 14–307)**
23. **REMOVE TIMING BELT NO.1 COVER (See page 14–307)**
24. **REMOVE TIMING BELT GUIDE**
25. **REMOVE TRANSVERSE ENGINE ENGINE MOUNTING BRACKET (See page 14–307)**
26. **SET NO. 1 CYLINDER TO TDC/COMPRESSION (See page 14–307)**
27. **REMOVE TIMING CHAIN COVER PLATE (See page 14–307)**
28. **REMOVE TIMING BELT (See page 14–307)**

HINT:
If re–using the timing belt, draw a direction arrow on the timing belt (in direction of engine revolution), and place matchmarks on the pulleys and the timing belt.

29. **REMOVE FUEL FILTER ASSY (See page 11–82)**
30. **REMOVE HEATER PUMP ASSY (W/ COLD AREA) (See page 13–11)**
31. **REMOVE HEATER BRACKET (W/ COLD AREA) (See page 13–11)**
32. **REMOVE FLOOR PANEL BRACE FRONT (See page 15–10)**
33. **REMOVE EXHAUST PIPE ASSY FRONT (See page 15–10)**
34. **REMOVE EXHAUST PIPE ASSY (W/ COLD AREA) (See page 13–11)**
35. **DISCONNECT RADIATOR HOSE INLET**
36. **DISCONNECT HEATER INLET WATER HOSE**
37. **DISCONNECT HEATER OUTLET WATER HOSE**
38. **DISCONNECT FUEL PIPE TO FUEL TUBE FUEL HOSE**
39. **DISCONNECT OIL COOLER HOSE**
40. **REMOVE TURBO INSULATOR NO.2 (See page 13–11)**
41. **REMOVE TURBO INSULATOR NO.1 (See page 13–11)**

cardiagn.com

**42. REMOVE EXHAUST MANIFOLD HEAT INSULATOR NO.2 (See page 13–11)**
**43. REMOVE MANIFOLD STAY NO.2 (See page 13–11)**
**44. REMOVE MANIFOLD STAY (See page 13–11)**
**45. REMOVE EXHAUST MANIFOLD CONVERTER SUB–ASSY (See page 13–11)**
**46. REMOVE TURBOCHARGER STAY (See page 13–11)**
**47. REMOVE TURBO WATER HOSE NO.1 (See page 13–11)**
**48. REMOVE TURBO WATER HOSE NO.2 (See page 13–11)**
**49. SEPARATE TURBO OIL INLET PIPE SUB–ASSY (See page 13–11)**
**50. REMOVE TURBOCHARGER SUB–ASSY (See page 13–11)**
**51. REMOVE CAMSHAFT POSITION SENSOR (See page 10–63)**
**52. REMOVE CAMSHAFT TIMING PULLEY (See page 14–318)**
SST 09960–10010 (09962–01000, 09963–01000)

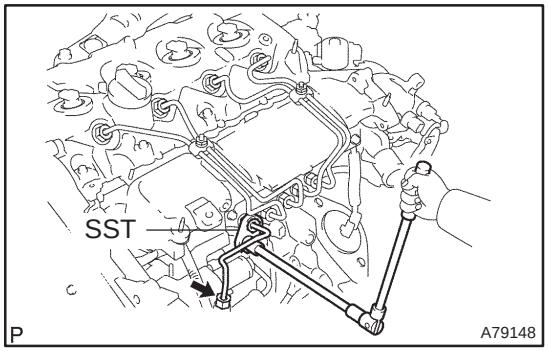


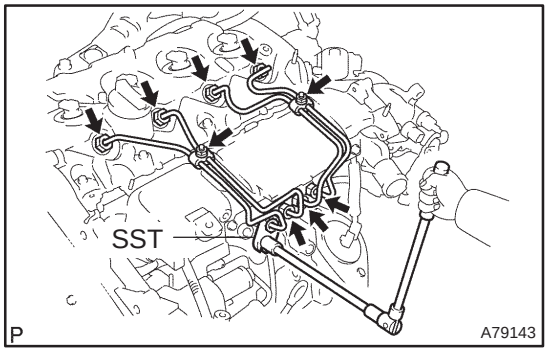


**53. REMOVE FUEL INLET PIPE SUB–ASSY**
(a) Using SST, remove the fuel inlet pipe from the common rail side.
SST 09023–12700
(b) Using SST, remove the fuel inlet pipe from the pump side.
SST 09023–12700

**NOTICE:**
**After removing the fuel pipe, cover the common rail and the injector mounting holes with vinyl tape to prevent dust from being introduced.**

**54. REMOVE INJECTION PIPE SUB–ASSY NO.1 (See page 11–60)**
SST 09023–12700
(a) Remove the 2 nuts and 2 upper infection pipe clamps from the intake manifold.
(b) Using SST, remove the injection pipe from the common rail side.
SST 09023–12700
(c) Using SST, remove the injection pipe from the injector side.
SST 09023–12700
(d) After removing the fuel pipe, to prevent dust or foreign objects from being introduced, cover the common rail with vinyl tape and protect the injector inlet with a vinyl or a plastic bag.

**55. REMOVE INJECTION PIPE SUB–ASSY NO.2**
SST 09023–12700
HINT:
Perform the same procedures as injection pipe No. 1.

**56. REMOVE INJECTION PIPE SUB–ASSY NO.3**
SST 09023–12700
HINT:
Perform the same procedures as injection pipe No. 1.

cardiagn.com

**57. REMOVE INJECTION PIPE SUB–ASSY NO.4**

SST 09023–12700

HINT:

Perform the same procedures as injection pipe No. 1.

**58. REMOVE VACUUM PUMP ASSY (See page 14–318)**

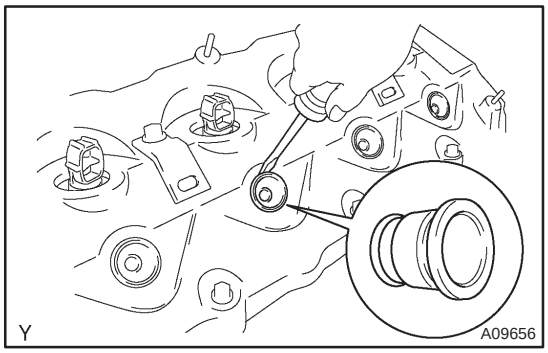


**59. REMOVE NOZZLE HOLDER SEAL**

(a) Using a screwdriver, pry out the 4 nozzle holder seals.

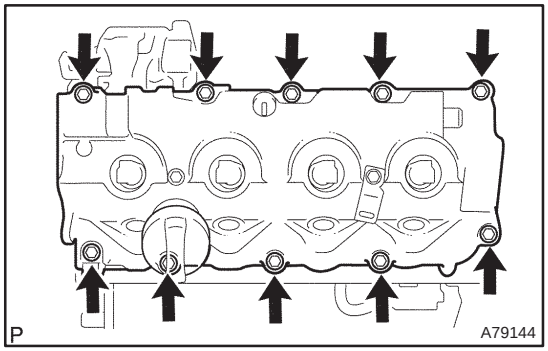


**60. REMOVE CYLINDER HEAD COVER SUB–ASSY**

(a) Remove the 10 bolts, the cylinder head cover and the gasket.

**61. REMOVE NOZZLE LEAKAGE PIPE ASSY (See page 11–60)**

**62. REMOVE INJECTOR ASSY (See page 11–60)**

HINT:

Since each injector assembly has a characteristic fuel injecting behavior, store them in correct order so that they can be returned to the original locations when re–assembling.

**63. REMOVE CAMSHAFT OIL SEAL RETAINER (See page 14–318)**

**64. REMOVE NO.2 CAMSHAFT (See page 14–318)**

**65. REMOVE CAMSHAFT (See page 14–318)**

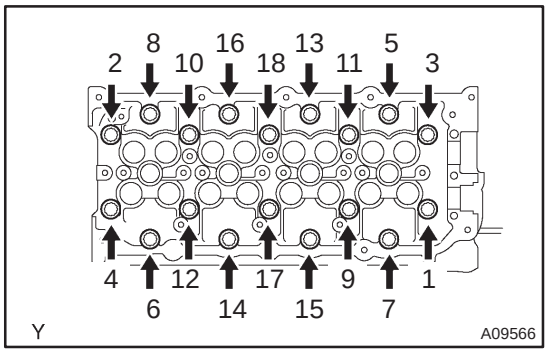


**66. REMOVE CYLINDER HEAD SUB–ASSY**

(a) Using several steps, loosen the 18 cylinder head bolts uniformly in the sequence shown in the illustration. Remove the 18 cylinder head bolts and the plate washers.

**NOTICE:**

**Cylinder head warpage or cracking could result from removing bolts in incorrect order.**

cardiagn.com

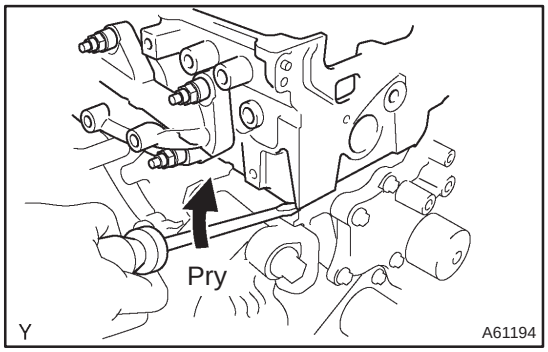


(b) Lift the cylinder head from the dowels on the cylinder block, and place the cylinder head on wooden blocks on a work bench.

**NOTICE:**

**Be careful not to damage the contact surfaces of the cylinder head and cylinder block.**

HINT:

If the cylinder head is lift off, pry between the cylinder head and cylinder block with a screwdriver.

## 67. REMOVE CYLINDER HEAD GASKET

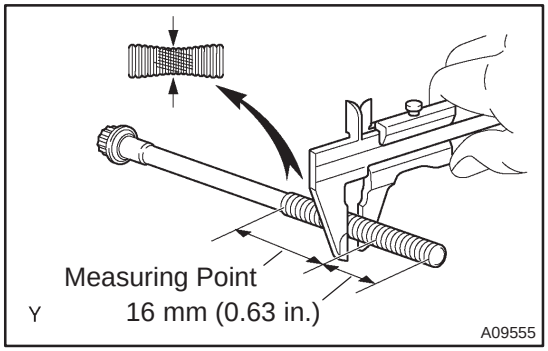


## 68. INSPECT CYLINDER HEAD SET BOLT

(a) Using vernier calipers, measure the tension portion diameter of the bolts.

**Standard outside diameter:**
**10.75 to 11.00 mm (0.4232 to 0.4331 in.)**
**Minimum outside diameter: 10.40 mm (0.4094 in.)**

If the diameter is less than minimum, replace the bolt.

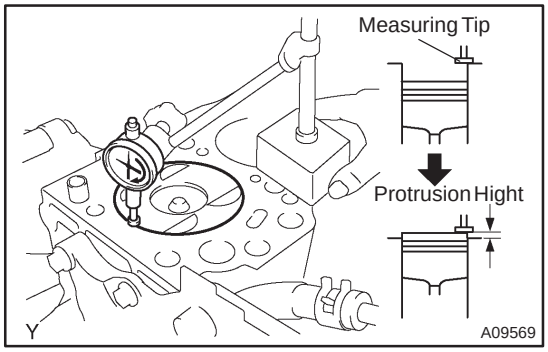


## 69. INSTALL CYLINDER HEAD GASKET

(a) Measure protrusion height of the piston heads.
  (1) Clean the cylinder block with solvent.
  (2) Set the piston to be measured to slightly before TDC.
  (3) Place a dial indicator on the cylinder block, and calibrate the dial indicator at 0 mm (0 in.).

HINT:

- Place measuring tip of the dial indicator as shown in the illustration.
- Make sure that the measuring tip is square to the cylinder block gasket and the piston head when measuring.
  (4) Find the most overhung position of the piston head by slowly turning the crankshaft clockwise and counterclockwise.

cardiagn.com

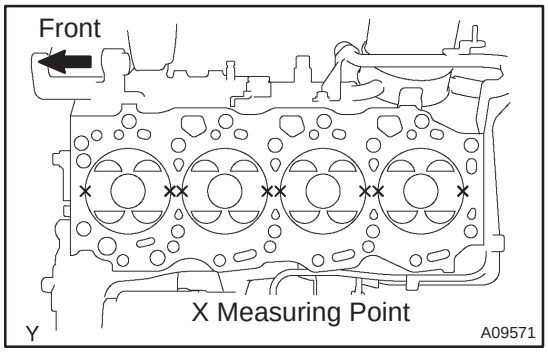


(5) Measure a protrusion height of the piston head for each cylinder at 2 places as shown in the illustration. (Total of 8 measurements.)

(6) Record the highest protrusion height from the 2 measurements at each cylinder.

(b) Select new cylinder head gasket.

HINT:

There are 5 sizes of new cylinder head gaskets, marked ”A”, ”B”, ”C”, ”D”, or ”E”.

**New cylinder head gasket thickness:**

| | |
|---|---|
| A | 0.85 to 0.95 mm (0.0335 to 0.0374 in.) |
| B | 0.90 to 1.00 mm (0.0354 to 0.0394 in.) |
| C | 0.95 to 1.05 mm (0.0374 to 0.0413 in.) |
| D | 1.00 to 1.10 mm (0.0394 to 0.0433 in.) |
| E | 1.05 to 1.15 mm (0.0413 to 0.0453 in.) |

(1) Find the highest protrusion height among the 4 measurement records. It is used to select a new cylinder head gasket.

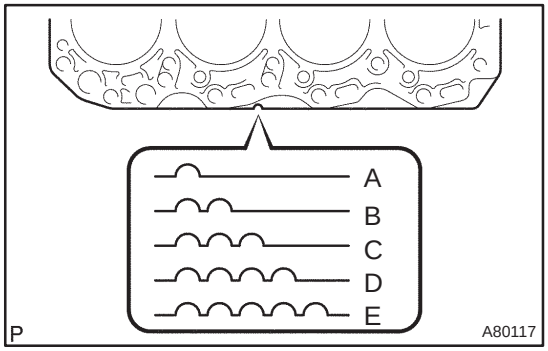


(2) Select the new gasket among A to E using the matrix below.

**New gasket matrix:**

| Piston protrusion mm (in.) | Gasket size |
|---|---|
| 0.165 to 0.220 (0.0065 to 0.0087) | A |
| 0.220 to 0.270 (0.0087 to 0.0106) | B |
| 0.270 to 0.320 (0.0106 to 0.0126) | C |
| 0.320 to 0.370 (0.0126 to 0.0146) | D |
| 0.370 to 0.425 (0.0146 to 0.0167) | E |

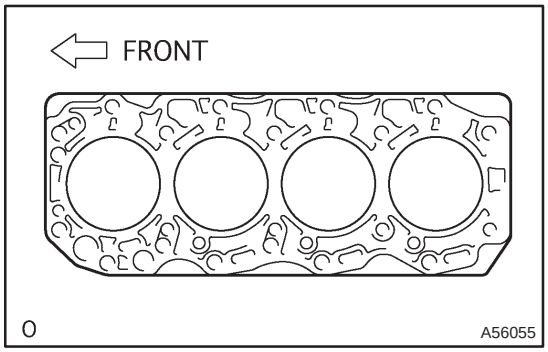


(c) Place new cylinder head gasket on the cylinder block.

**NOTICE:**

**Pay attention to mounting orientation.**

cardiagn.com

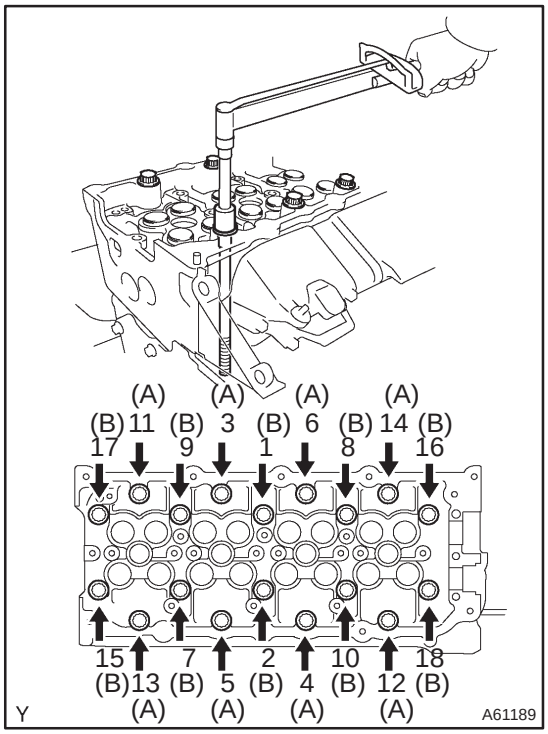


**70. INSTALL CYLINDER HEAD SUB–ASSY**

HINT:

- The cylinder head bolts are tightened in 4 successive steps (steps (c), (e), (f) and (g)).
- If the cylinder head bolt is broken or deformed, replace it with a new bolt.

(a) Apply a light coat of engine oil on the threads of the cylinder head bolts and the plate washers.

(b) Install the plate washer to the cylinder head bolt.

(c) Using several steps, install and tighten the 18 cylinder head bolts uniformly in the sequence shown in the illustration.

**Torque: 45 N·m (459 kgf·cm, 33 ft·lbf)**

HINT:

See the table below for the bolt length.

| Bolt Type | Bolt Length |
|---|---|
| (A) | 160mm (6.30 in.) |
| (B) | 104mm (4.09 in.) |

If the cylinder head bolt does not meet the torque specification, replace the cylinder head bolt with a new bolt.

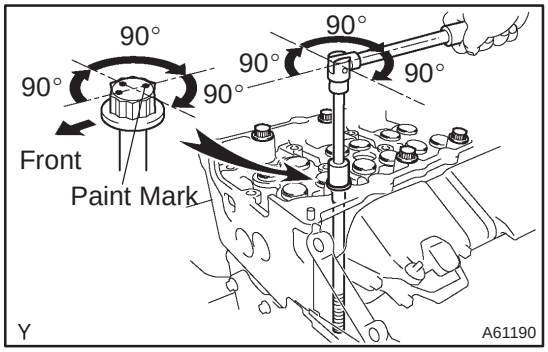


(d) Mark the front of the cylinder head bolt with paint.

(e) Retighten the cylinder head bolts by 90° in the same sequence as step (c).

(f) Retighten the cylinder head bolts by additional 90° in the same sequence as step (c).

(g) Retighten the cylinder head bolts by one more additional 90° in the same sequence as step (c).

(h) Check that each painted mark is now at the intake manifold side.

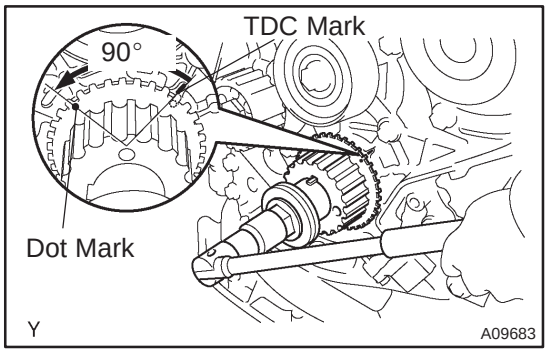


**71. SET NO. 1 CYLINDER TO TDC/COMPRESSION**

(a) Using the crankshaft pulley bolt, turn the crankshaft to set the dot mark of the crankshaft timing pulley at the position of 90 ° BTDC.

**NOTICE:**

**If the timing belt is disengaged, having the crankshaft timing pulley at wrong angle can cause the piston head and valve head to come into contact with each other.**

**72. INSTALL CAMSHAFT (See page 14–318)**

**73. INSTALL NO.2 CAMSHAFT (See page 14–318)**

**74. REMOVE CAMSHAFT OIL SEAL (See page 14–318)**

**75. INSTALL CAMSHAFT OIL SEAL (See page 14–318)**

SST 09223–46011



cardiagn.com

**76. INSTALL CAMSHAFT OIL SEAL RETAINER (See page 14–318)**

**77. INSTALL CAMSHAFT TIMING PULLEY (See page 14–318)**

SST 09960–10010 (09962–01000, 09963–01000)

**78. INSTALL CAMSHAFT POSITION SENSOR (See page 10–64)**

**79. INSTALL INJECTOR ASSY (See page 11–60)**

**80. INSTALL NOZZLE LEAKAGE PIPE ASSY (See page 11–60)**

SST 09992–00242

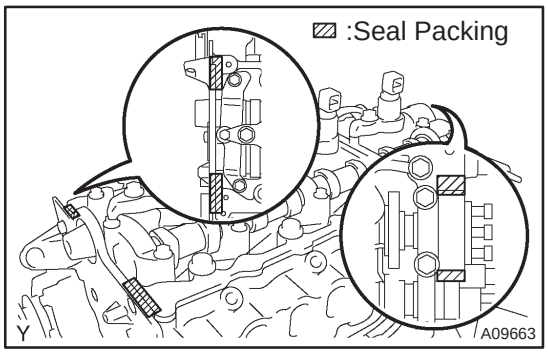


**81. INSTALL CYLINDER HEAD COVER SUB–ASSY**

(a) Remove any old packing (FIPG) material.

(b) Apply seal packing to the cylinder head.

**Seal packing: Part No. 08826–00080 or equivalent**

(c) Install the gasket to the head cover.

(d) Install the cylinder head cover with the 10 bolts.

**Torque: 13 N·m (135 kgf·cm, 9.7 ft·lbf)**

**82. INSTALL NOZZLE HOLDER SEAL**

(a) Install 4 new nozzle holder seals.

**83. INSTALL VACUUM PUMP ASSY (See page 14–318)**

**84. INSTALL INJECTION PIPE SUB–ASSY NO.1 (See page 11–60)**

**NOTICE:**

**When assembling the pipes, perform the operation with the engine cold under room temperature.**

(a) Remove the vinyl or the plastic bag from the injector and vinyl tape from the common rail.

(b) Temporarily install the injection pipe.

cardiagn.com

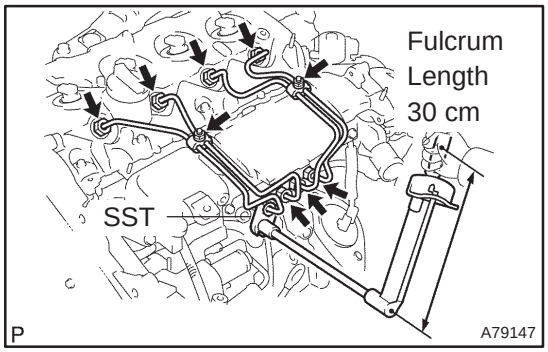


(c) Using SST, tighten the nut of the injection pipe to the common rail side.
SST 09023–12700
**Torque:**
**42 N·m (428 kgf·cm, 31 ft·lbf) for a used pipe using SST**
**46 N·m (469 kgf·cm, 34 ft·lbf) for a used pipe not using SST**
**31 N·m (316 kgf·cm, 23 ft·lbf) for a new pipe using SST**
**34 N·m (347 kgf·cm, 25 ft·lbf) for a new pipe not using SST**

HINT:
- Use a torque wrench with a fulcrum length of 30 cm (11.81 in.)
- Check if the used pipe has deflection or is installed properly after injection pipe is reassembled. If there is deflection or if it can not be installed properly, replace the used pipe with a new pipe.

(d) Using SST, tighten the nut of the injection pipe to the injector side.
SST 09023–12700
**Torque:**
**42 N·m (428 kgf·cm, 31 ft·lbf) for a used pipe using SST**
**46 N·m (469 kgf·cm, 34 ft·lbf) for a used pipe not using SST**
**31 N·m (316 kgf·cm, 23 ft·lbf) for a new pipe using SST**
**34 N·m (347 kgf·cm, 25 ft·lbf) for a new pipe not using SST**

HINT:
- Use a torque wrench with a fulcrum length of 30 cm (11.81 in.)
- Check if the used pipe has deflection or is installed properly after injection pipe is reassembled. If there is deflection or if it can not be installed properly, replace the used pipe with a new pipe.

(e) Install the 2 upper injection pipe clamps with the 2 nuts.
**Torque: 5.0 N·m (51 kgf·cm, 44 in.·lbf)**

**85. INSTALL INJECTION PIPE SUB–ASSY NO.2**
SST 09023–12700

HINT:
Perform the same procedures as injection pipe No. 1.

**86. INSTALL INJECTION PIPE SUB–ASSY NO.3**
SST 09023–12700

HINT:
Perform the same procedures as injection pipe No. 1.

**87. INSTALL INJECTION PIPE SUB–ASSY NO.4**
SST 09023–12700

HINT:
Perform the same procedures as injection pipe No. 1.

cardiagn.com

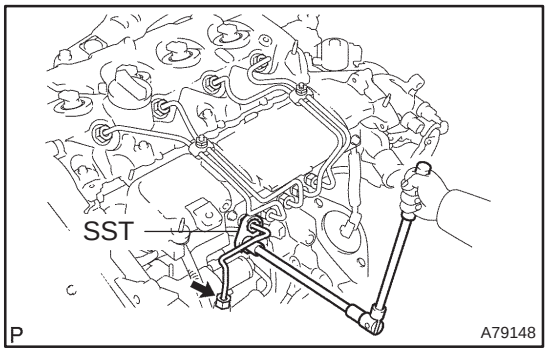


**88. INSTALL FUEL INLET PIPE SUB–ASSY**

**NOTICE:**

- **In case of having the cylinder head gasket replaced, must replace fuel inlet pipe, too.**
- **When assembling the pipe, perform the operation with the engine cold under room temperature.**

(a) Temporarily install the new fuel inlet pipe.

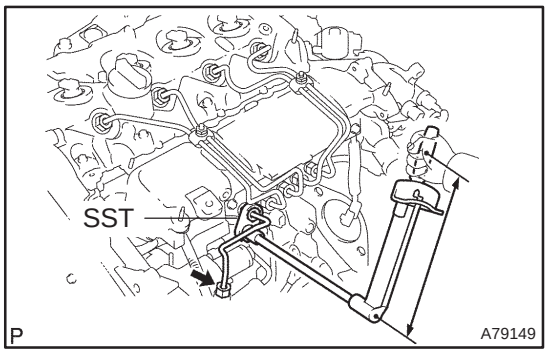


(b) Using SST, tighten the nut of the fuel inlet pipe to the common rail side.
SST 09023–12700
**Torque:**
**42 N·m (428 kgf·cm, 31 ft·lbf) for a used pipe using SST**
**46 N·m (469 kgf·cm, 34 ft·lbf) for a used pipe not using SST**
**31 N·m (316 kgf·cm, 23 ft·lbf) for a new pipe using SST**
**34 N·m (347 kgf·cm, 25 ft·lbf) for a new pipe not using SST**

HINT:

- Use a torque wrench with a fulcrum length of 30 cm (11.81 in.)
- Check if the used pipe has deflection or is installed properly after inlet pipe is reassembled. If there is deflection or if it can not be installed properly, replace the used pipe with a new pipe.

(c) Using SST, tighten the nut of the fuel inlet pipe to the pump side.
SST 09023–12700
**Torque:**
**42 N·m (428 kgf·cm, 31 ft·lbf) for a used pipe using SST**
**46 N·m (469 kgf·cm, 34 ft·lbf) for a used pipe not using SST**
**31 N·m (316 kgf·cm, 23 ft·lbf) for a new pipe using SST**
**34 N·m (347 kgf·cm, 25 ft·lbf) for a new pipe not using SST**

HINT:

- Use a torque wrench with a fulcrum length of 30 cm (11.81 in.)
- Check if the used pipe has deflection or is installed properly after inlet pipe is reassembled. If there is deflection or if it can not be installed properly, replace the used pipe with a new pipe.

**89. INSTALL TURBOCHARGER SUB–ASSY (See page 13–11)**
**90. INSTALL TURBO OIL INLET PIPE SUB–ASSY (See page 13–11)**
**91. INSTALL TURBOCHARGER STAY (See page 13–11)**
**92. INSTALL EXHAUST MANIFOLD CONVERTER SUB–ASSY (See page 13–11)**
**93. INSTALL MANIFOLD STAY NO.2 (See page 13–11)**
**94. INSTALL EXHAUST MANIFOLD HEAT INSULATOR NO.2 (See page 13–11)**



cardiagn.com

95. **INSTALL TURBO INSULATOR NO.1 (See page 13–11)**
96. **INSTALL TURBO INSULATOR NO.2 (See page 13–11)**
97. **INSTALL EXHAUST PIPE ASSY (W/ COLD AREA) (See page 13–11)**
98. **INSTALL EXHAUST PIPE ASSY FRONT (See page 15–10)**
99. **INSTALL FLOOR PANEL BRACE FRONT (See page 15–10)**
100. **INSTALL HEATER BRACKET (W/ COLD AREA) (See page 13–11)**
101. **INSTALL HEATER PUMP ASSY (W/ COLD AREA) (See page 13–11)**
102. **INSTALL FUEL FILTER ASSY (See page 11–82)**
103. **SET NO. 1 CYLINDER TO TDC/COMPRESSION (See page 14–307)**
     SST 09960–10010 (09962–01000, 09963–01000)
104. **INSTALL TIMING BELT (See page 14–307)**
105. **CHECK VALVE TIMING (See page 14–307)**
106. **TIMING CHAIN COVER PLATE (See page 14–307)**
107. **INSTALL TRANSVERSE ENGINE ENGINE MOUNTING BRACKET (See page 14–307)**
108. **INSTALL TIMING BELT GUIDE (See page 14–307)**
109. **INSTALL TIMING BELT NO.1 COVER (See page 14–307)**
110. **INSTALL TIMING BELT NO.2 COVER (See page 14–307)**
111. **INSTALL IDLER PULLEY SUB–ASSY (See page 14–307)**
112. **INSTALL CRANKSHAFT PULLEY (See page 14–307)**
     SST 09213–54015 (90105–08076), 09330–00021
113. **INSTALL ENGINE MOUNTING INSULATOR SUB–ASSY RH (See page 14–307)**
114. **INSTALL POWER STEERING IDLE PULLEY BRACKET (See page 14–307)**
115. **ADJUST V (COOLER COMPRESSOR TO CRANKSHAFT PULLEY) BELT NO.1 (See page 14–269)**
116. **INSTALL INJECTOR DRIVER (See page 14–286)**
117. **INSTALL AIR TUBE NO.1 (See page 14–270)**
118. **INSTALL AIR TUBE NO.2 (See page 14–286)**
119. **INSTALL AIR CLEANER ASSY (See page 14–286)**
120. **INSTALL VACUUM RESERVOIR SUB–ASSY (See page 13–11)**
121. **INSTALL ENGINE COVER NO.1**
     **Torque: 8.0 N·m (82 kgf·cm, 71 in.·lbf)**
122. **INSTALL FRONT WHEEL RH**
     **Torque: 103 N·m (1,050 kgf·cm, 76 ft·lbf)**
123. **ADD ENGINE OIL**
124. **ADD ENGINE COOLANT (See page 16–44)**
125. **CHECK FOR FUEL LEAKS (See page 11–60)**
126. **CHECK FOR ENGINE OIL LEAKS**
127. **CHECK FOR ENGINE COOLANT LEAKS (See page 16–44)**
128. **CHECK FOR EXHAUST GAS LEAKS**

cardiagn.com

# CYLINDER HEAD GASKET (1ZZ–FE/3ZZ–FE)

141CL–01

## COMPONENTS

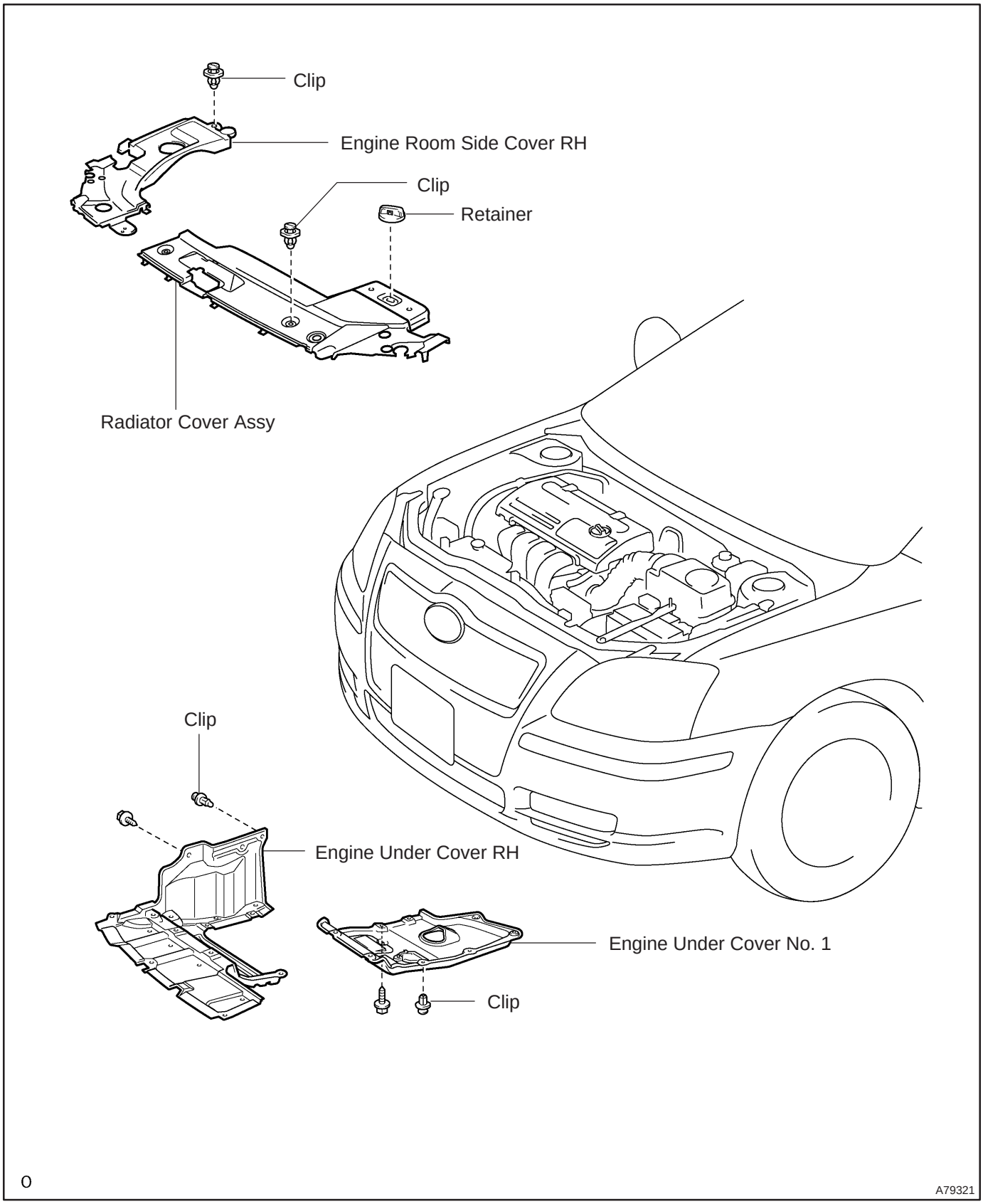


cardiagn.com

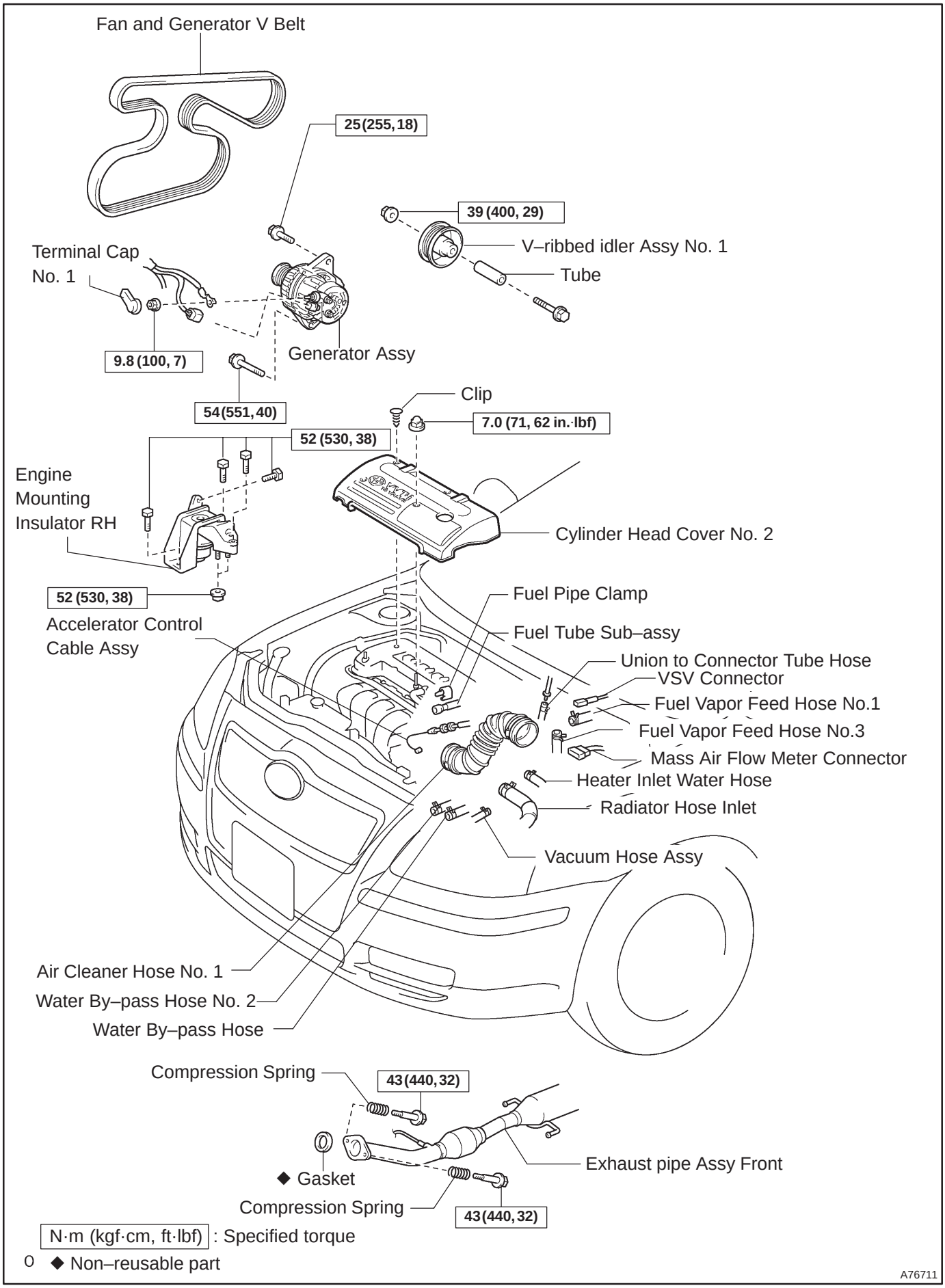


cardiagn.com

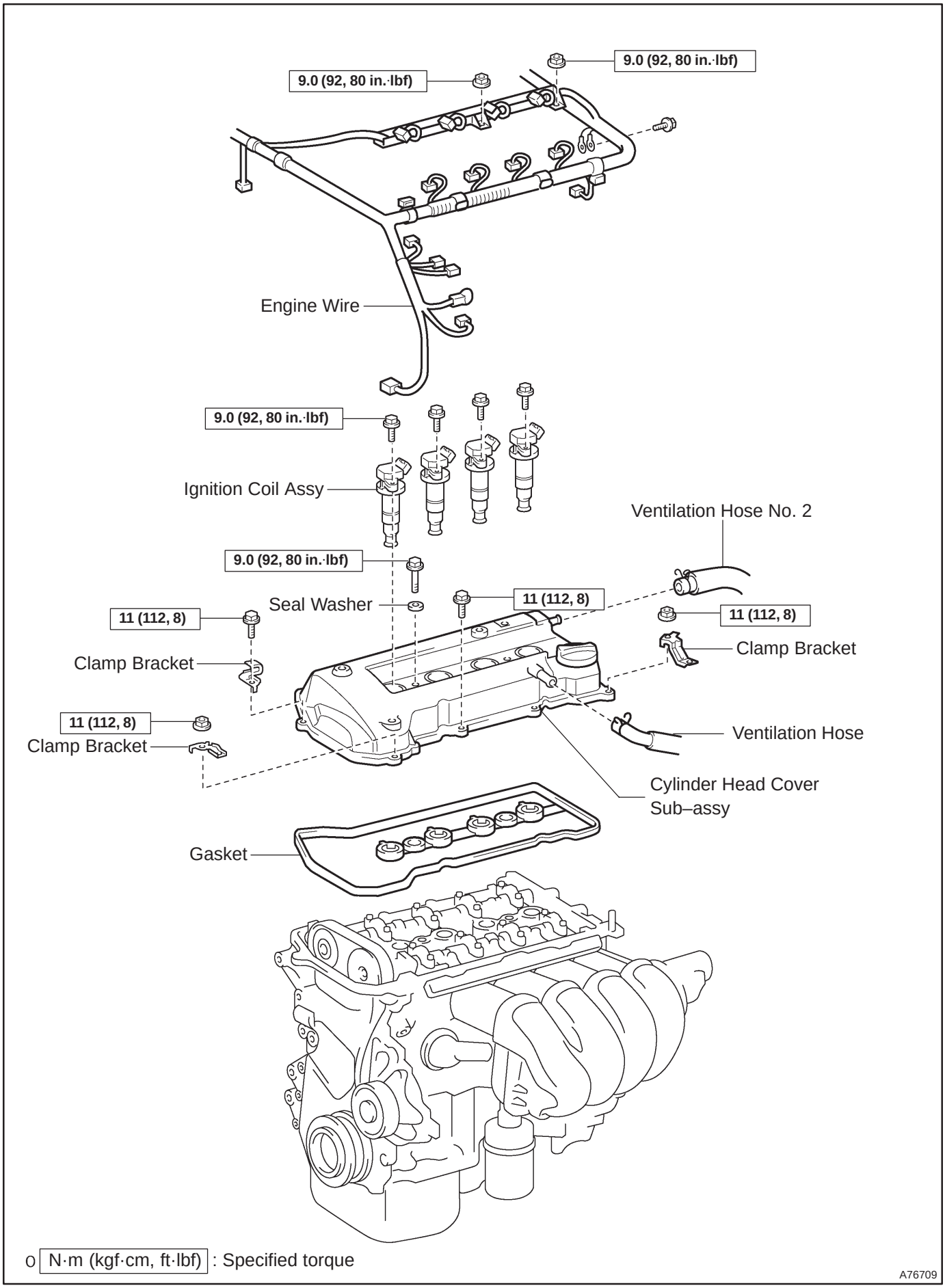


cardiagn.com

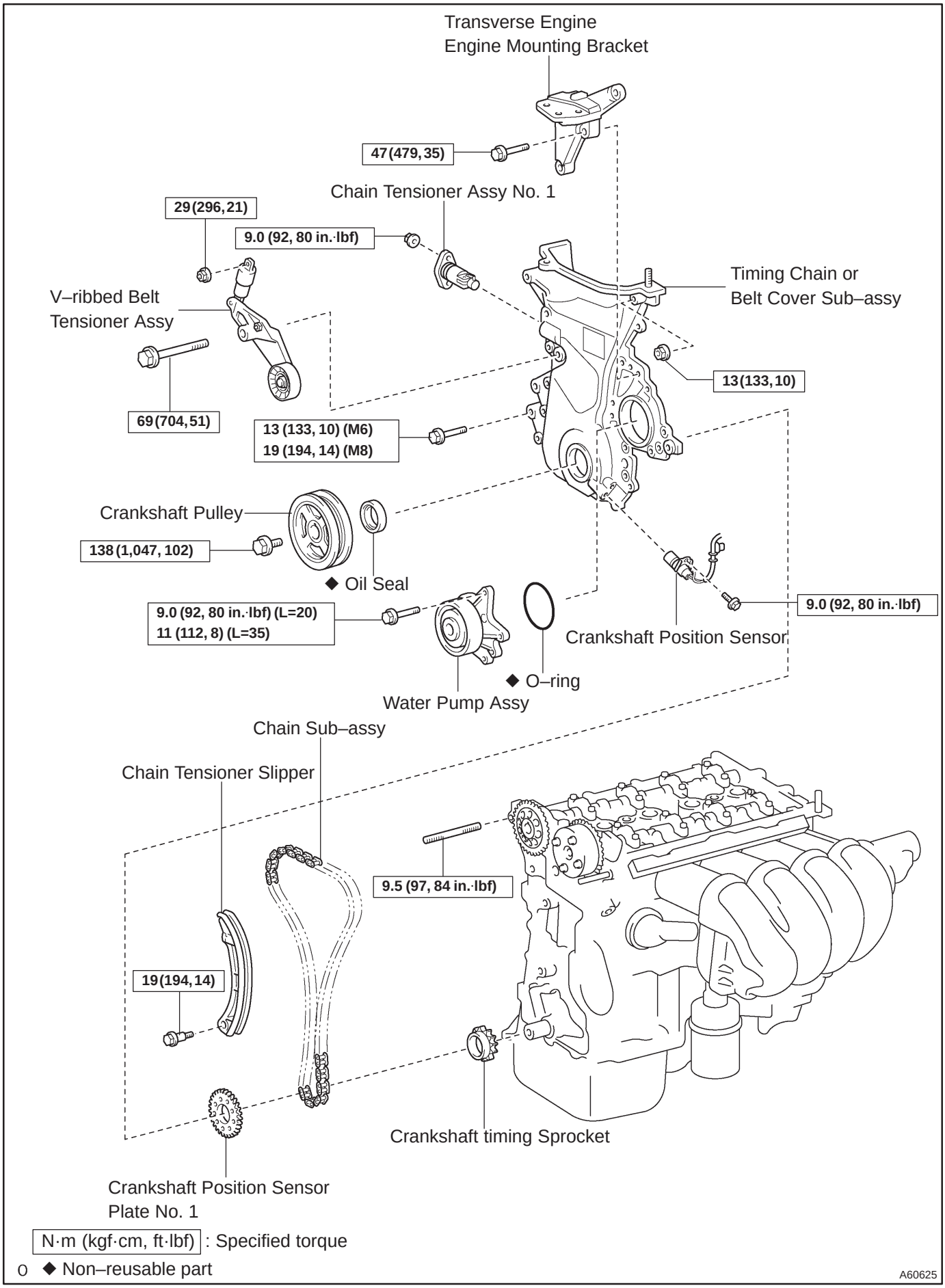


cardiagn.com

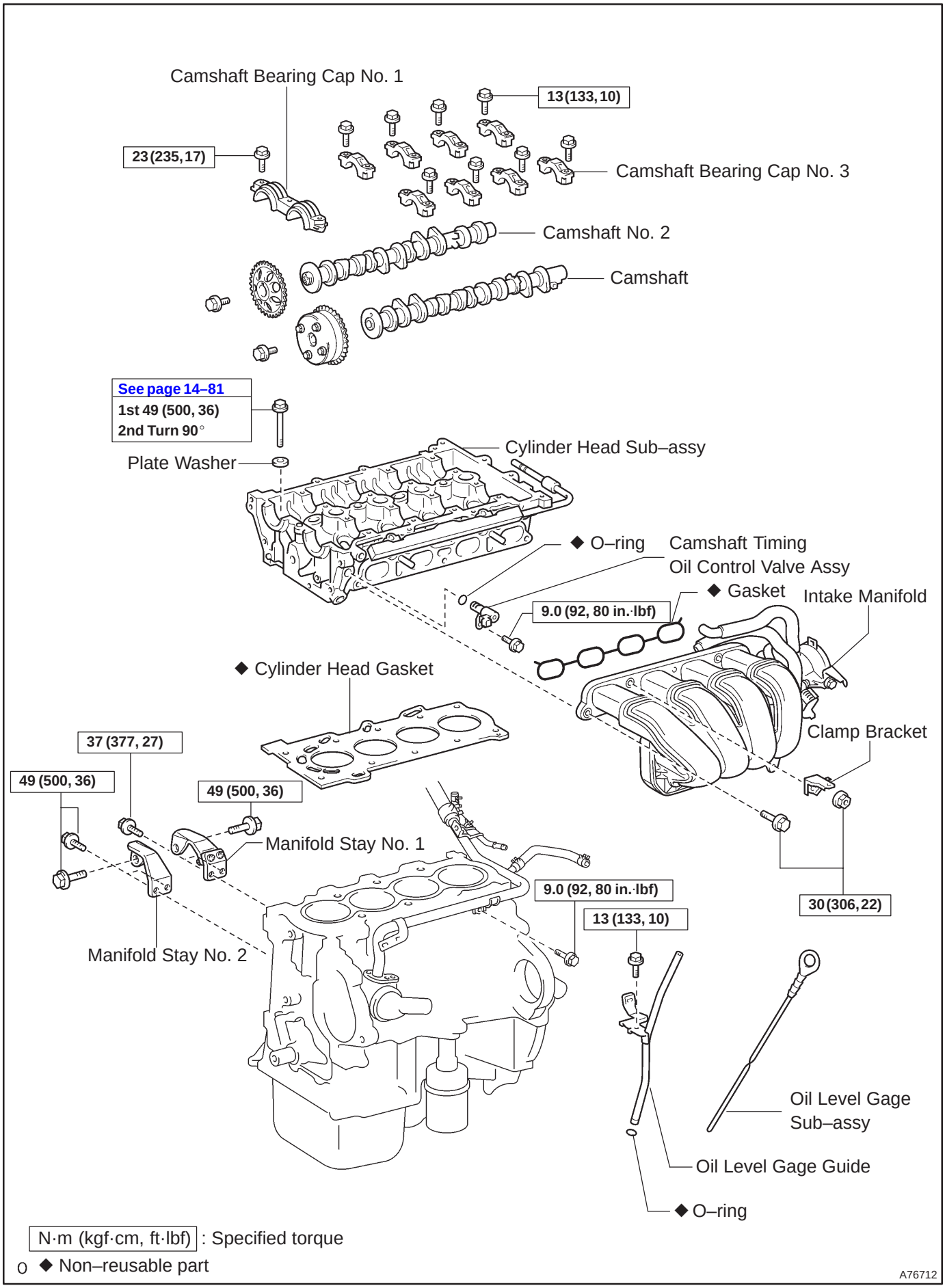


cardiagn.com

# REPLACEMENT

1. **DISCHARGE FUEL SYSTEM PRESSURE (See page 11–1)**
2. **REMOVE RADIATOR SUPPORT OPENING COVER (See page 14–27)**
3. **REMOVE ENGINE ROOM COVER SIDE (See page 14–27)**
4. **REMOVE FRONT WHEEL RH**
5. **REMOVE ENGINE UNDER COVER SUB–ASSY NO.1 (See page 14–27)**
6. **REMOVE ENGINE UNDER COVER RH (See page 14–27)**
7. **DRAIN ENGINE COOLANT (See page 16–7)**

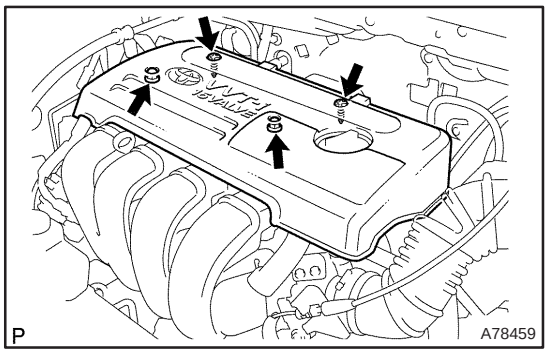


8. **REMOVE CYLINDER HEAD COVER NO.2**

(a) Remove the 2 nuts and 2 clips and detach the cylinder head cover No.2.

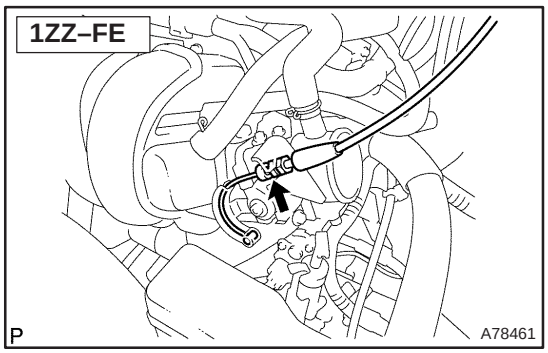


9. **SEPARATE ACCELERATOR CONTROL CABLE ASSY**

(a) Loosen the nut and separate the accelerator control cable.

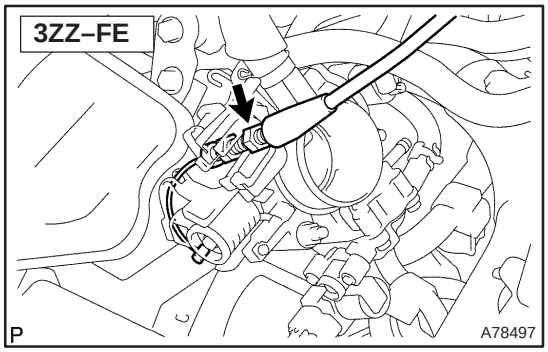


10. **REMOVE AIR CLEANER HOSE NO.1**

(a) Disconnect the VSV connector.
(b) Disconnect the fuel vapor feed No. 1 hose from the VSV.
(c) Disconnect the fuel vapor feed hose from the VSV.
(d) Loosen the 2 air cleaner hose clamp bolts and remove the air cleaner hose.

11. **DISCONNECT WATER BY–PASS HOSE**

(a) Disconnect the water by–pass hose from the throttle body.

12. **DISCONNECT WATER BY–PASS HOSE NO.2**

(a) Disconnect the water by–pass hose from the throttle body.

13. **REMOVE EFI FUEL PIPE CLAMP (See page 11–11)**



cardiagn.com

**14. DISCONNECT FUEL TUBE SUB–ASSY (See page 11–11)**
SST 09268–21010

**15. DISCONNECT UNION TO CONNECTOR TUBE HOSE**

(a) Disconnect the union to connector tube hose from the hose to hose tube.

**16. DISCONNECT RADIATOR HOSE INLET**

(a) Disconnect radiator hose inlet from the cylinder head.

**17. DISCONNECT HEATER INLET WATER HOSE**

(a) Disconnect the heater inlet water hose from the cylinder head.

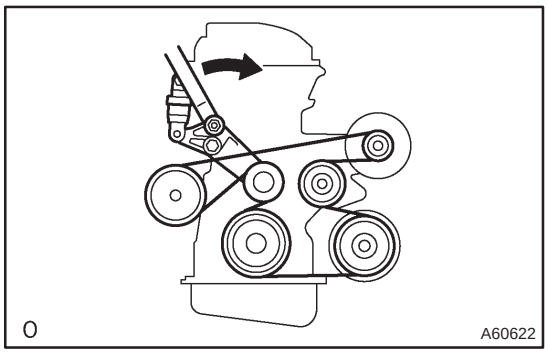


**18. REMOVE FAN AND GENERATOR V BELT**

(a) Turn the V–ribbed belt tensioner clockwise slowly and loosen it. Remove the fan and generator V belt and put back the V–ribbed belt tensioner carefully.

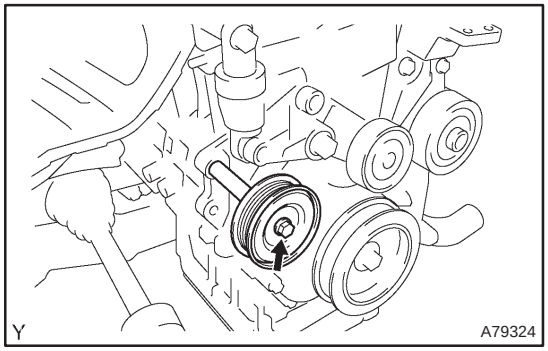


**19. REMOVE V–RIBBED IDLER ASSY NO.1**

(a) Remove the nut, bolt, tube and idler.

**20. REMOVE GENERATOR ASSY (See page 19–7)**

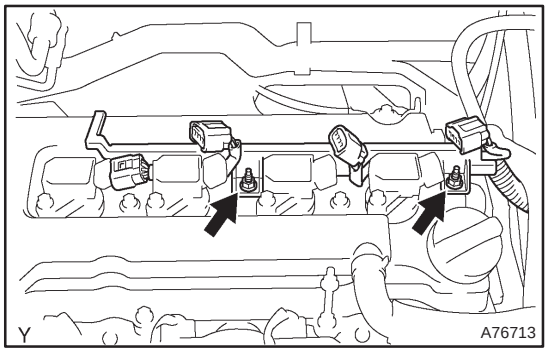


**21. DISCONNECT IGNITION COIL ASSY**

(a) Remove the 5 clamps from the 5 clamp brackets.

(b) Disconnect the 4 ignition coil connectors.

(c) Remove the 2 nuts which are used to secure the engine wire.

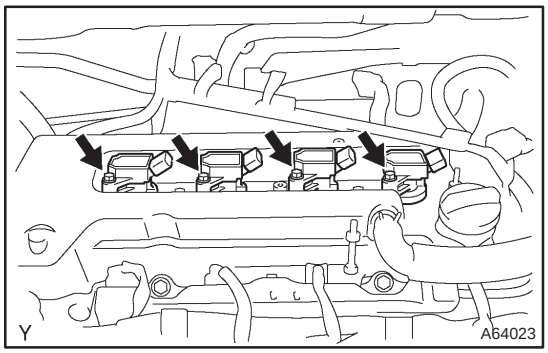


(d) Remove the 4 bolts and the 4 ignition coils.

cardiagn.com

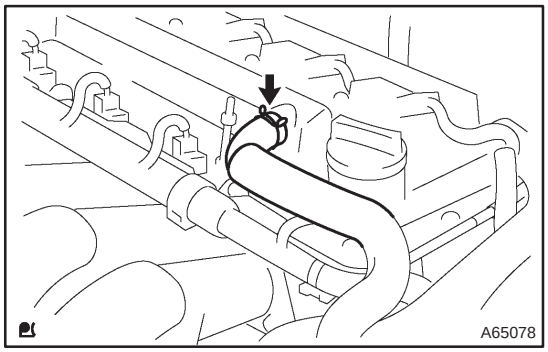


**22. DISCONNECT VENTILATION HOSE**

(a) Disconnect the ventilation hose from the cylinder head cover.

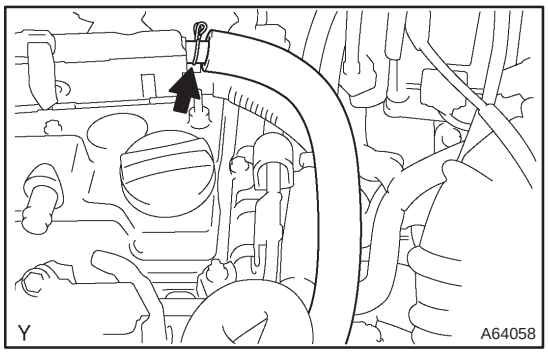


**23. DISCONNECT VENTILATION HOSE NO.2**

(a) Disconnect the ventilation hose from the cylinder head cover.

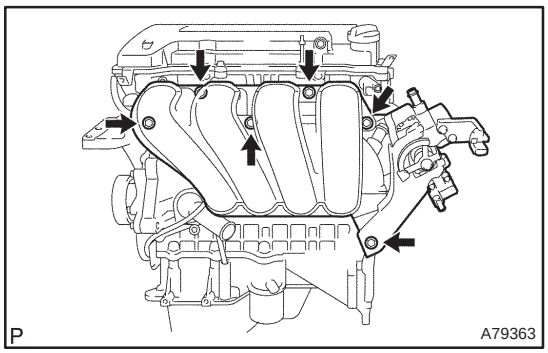


**24. REMOVE INTAKE MANIFOLD**

(a) Disconnect the 2 water hoses from the throttle body.
(b) Disconnect the ventilation hose and ventilation hose No. 2 from the cylinder head cover.
(c) Disconnect the vacuum hose from the water by–pass pipe No. 1.
(d) Remove the 4 bolts, 2 nuts and 2 wire brackets.
(e) Remove the intake manifold and the throttle body assembly.
(f) Remove the gasket from the intake manifold and the throttle body assembly.

**25. REMOVE OIL LEVEL GAGE SUB–ASSY**

(a) Remove the oil level gage from the oil level gage guide.

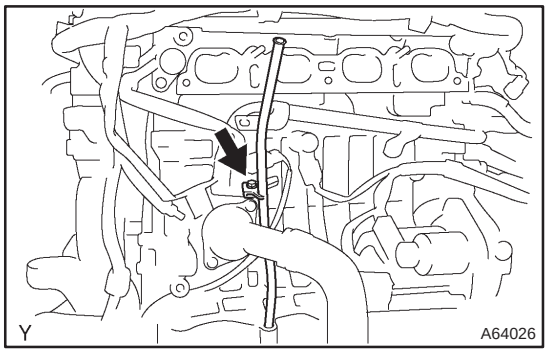


**26. REMOVE OIL LEVEL GAGE GUIDE**

(a) Disconnect the crankshaft position sensor cramp.
(b) Remove the bolt and the oil level gage guide.

**27. SEPARATE WATER BY–PASS PIPE NO.1**

(a) Remove the 2 bolts which are used to secure the water by–pass pipe.

cardiagn.com

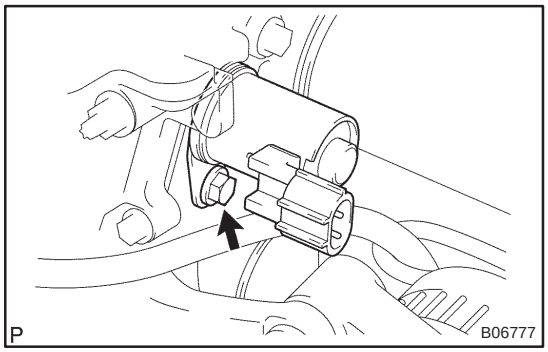


**28. REMOVE CAMSHAFT TIMING OIL CONTROL VALVE ASSY**

(a) Remove the bolt and the camshaft timing oil control valve.

**29. SEPARATE EXHAUST PIPE ASSY FRONT**

(a) Remove the 2 bolts and 2 compression springs which are used to secure the front side of exhaust pipe.

(b) Remove the gasket.

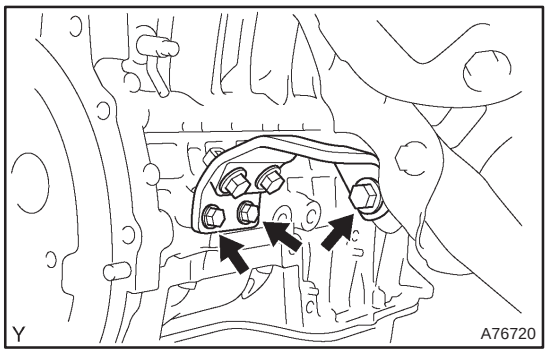


**30. REMOVE MANIFOLD STAY**

(a) Remove the 3 bolts and the manifold stay.

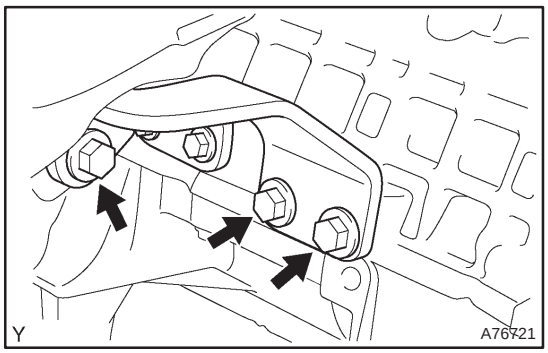


**31. REMOVE MANIFOLD STAY NO.2**

(a) Remove the 3 bolts and the manifold stay No. 2.

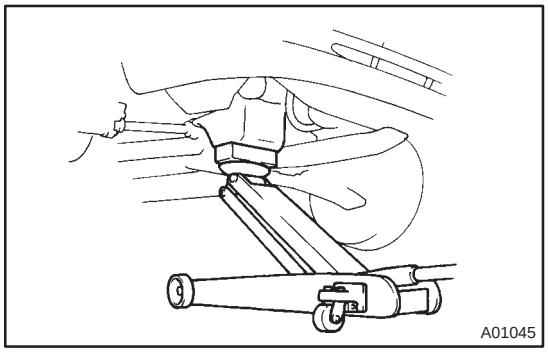


**32. REMOVE ENGINE MOUNTING INSULATOR SUB–ASSY RH**

(a) Place a wooden block on a jack underneath the engine. Remove the 4 bolts and 2 nuts and detach the engine mounting insulator RH.

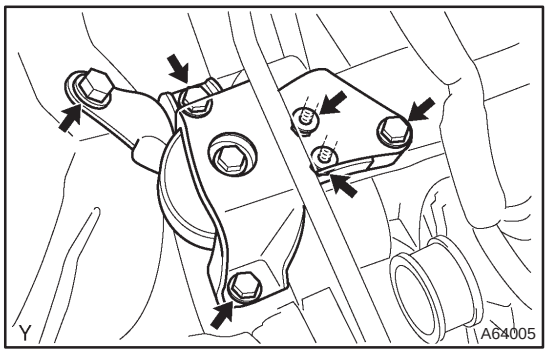


cardiagn.com

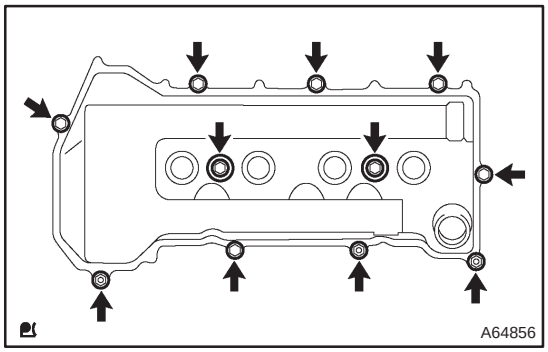


**33. REMOVE CYLINDER HEAD COVER SUB–ASSY**

(a) Remove the 9 bolts, 2 seal washers, 2 nuts and 3 clamp brackets.

(b) Remove the cylinder head cover.

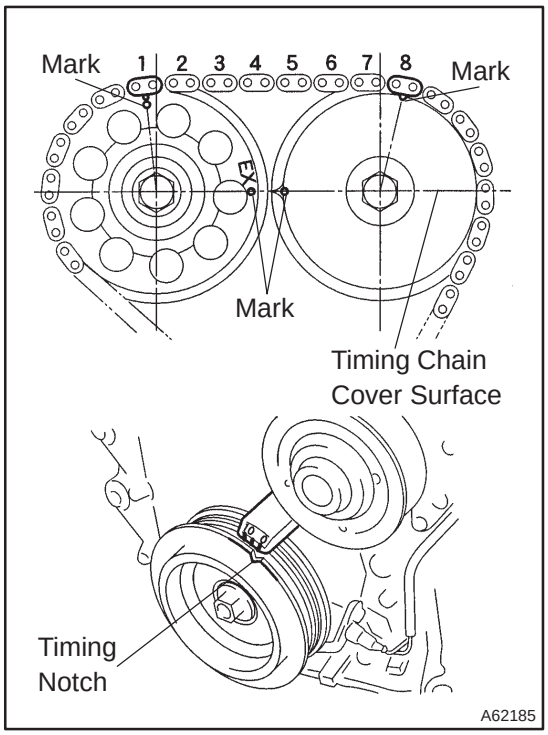


**34. SET NO. 1 CYLINDER TO TDC/COMPRESSION**

(a) Turn the crankshaft pulley to align the timing notch with the timing mark ”0” of the timing chain cover.

(b) Check that the point marks of the camshaft timing sprocket and VVT timing sprocket are in straight line on the timing chain cover surface as shown in the illustration.

HINT:

If not, turn the crankshaft 1 revolution (360°) and align the marks as above.

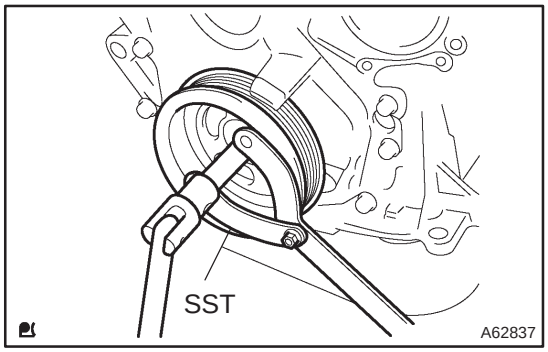


**35. REMOVE CRANKSHAFT PULLEY**

(a) Using SST, remove the pulley bolt.

SST 09960–10010 (09962–01000, 09963–01000)

(b) Remove the crankshaft pulley from the crankshaft.

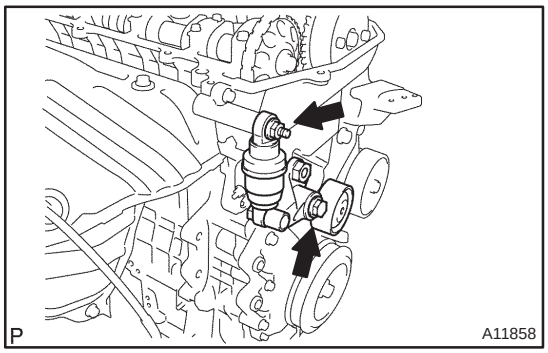


**36. REMOVE V–RIBBED BELT TENSIONER ASSY**

(a) Remove the bolt and nut and detach the V–ribbed belt tensioner.

HINT:

Jack up and down to remove the bolt.

**37. REMOVE WATER PUMP ASSY (See page 16–9)**

cardiagn.com

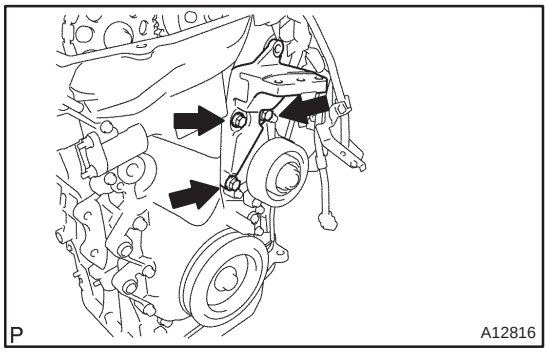


**38. REMOVE TRANSVERSE ENGINE ENGINE MOUNTING BRACKET**

(a) Remove the 3 bolts and the transverse engine engine mounting bracket.

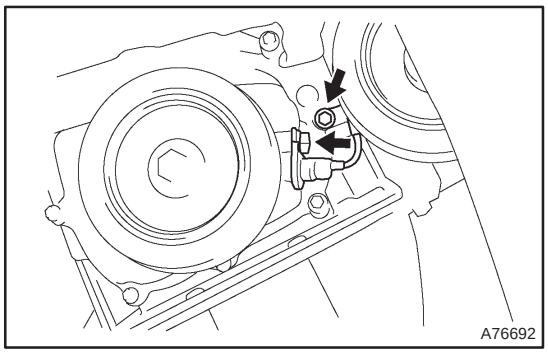


**39. REMOVE CRANKSHAFT POSITION SENSOR**

(a) Remove the 2 bolts which are used to secure the crankshaft position sensor.

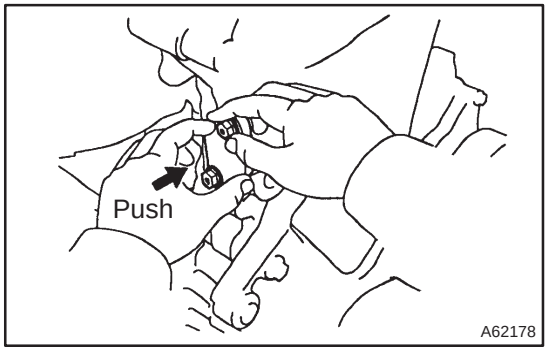


**40. REMOVE CHAIN TENSIONER ASSY NO.1**

(a) Remove the 2 nuts and the chain tensioner.

**NOTICE:**

**Do not revolve the crankshaft without the chain tensioner.**

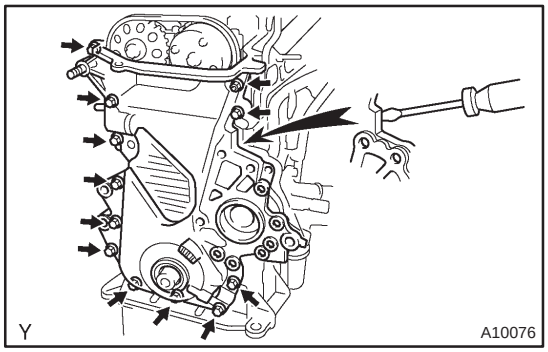


**41. REMOVE TIMING CHAIN OR BELT COVER SUB–ASSY**

(a) Remove the 11 bolts and nuts.

(b) Using a torx wrench socket (E8), remove the stud bolt.

(c) Remove the timing chain cover by prying between the cylinder head and the cylinder block with a screwdriver.

**NOTICE:**

**Be careful not to damage the timing chain cover, the cylinder head and the cylinder block.**

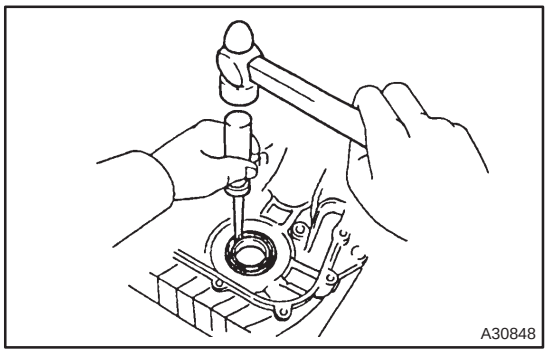


**42. REMOVE TIMING GEAR COVER OIL SEAL**

(a) Using a screwdriver, remove the oil seal.

**43. REMOVE CRANKSHAFT POSITION SENSOR PLATE NO.1**

**44. REMOVE CHAIN TENSIONER SLIPPER**

(a) Remove the bolt and the chain tensioner slipper.

**45. REMOVE CHAIN VIBRATION DAMPER NO.1**

(a) Remove the 2 bolt and the chain vibration damper.

cardiagn.com

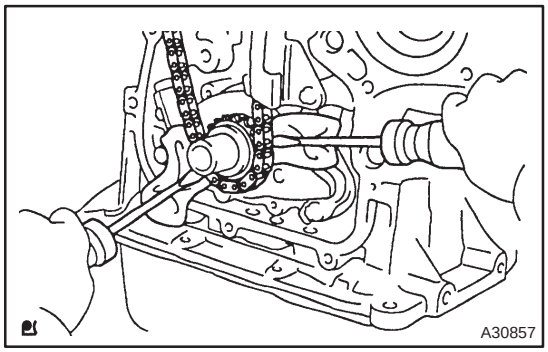


**46. REMOVE CHAIN SUB–ASSY**

(a) Remove the timing chain by prying the crankshaft timing gear using screwdrivers as shown in the illustration.

**NOTICE:**

- **Put shop rag to protect the engine.**
- **In case of revolving the camshafts with the chain off the sprockets, turn the crankshaft 1/4 revolution counterclockwise to prevent the valves from touching the pistons.**

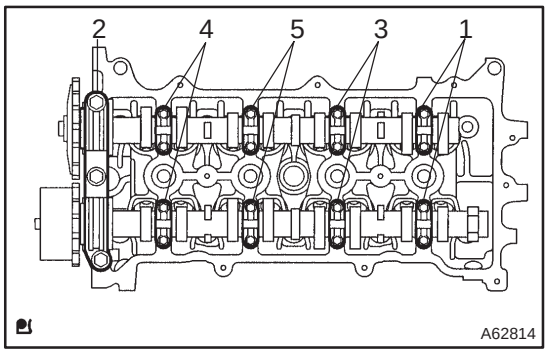


**47. REMOVE CAMSHAFT**

(a) Using several steps, loosen and remove the 19 bearing cap bolts uniformly in the sequence shown in the illustration. Remove the 9 bearing caps, and both the intake and exhaust camshafts.

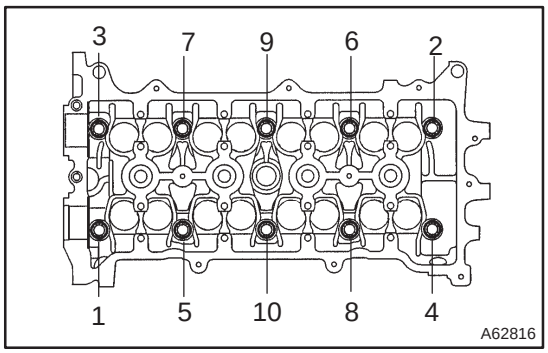


**48. REMOVE CYLINDER HEAD SUB–ASSY**

(a) Using several steps, loosen and remove the 10 cylinder head bolts with a 10 mm hexagon wrench uniformly in the sequence shown in the illustration. Remove the 10 cylinder head bolts and 10 plate washers.

(b) Remove the cylinder head.

**49. REMOVE CYLINDER HEAD GASKET**

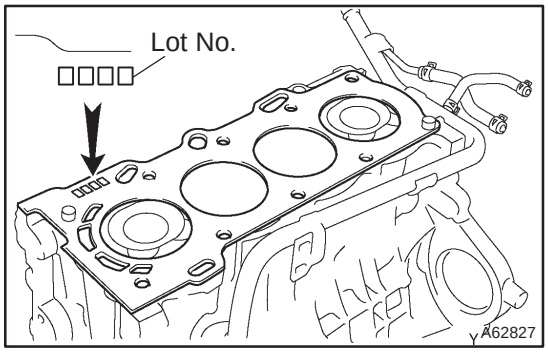


**50. INSTALL CYLINDER HEAD GASKET**

(a) Place a new cylinder head gasket on the cylinder block with the Lot No. stamp facing upward.

**NOTICE:**

- **Pay attention to the mounting orientation.**
- **Place the cylinder head on the gasket gently in order not to damage the gasket with the bottom part of the head.**

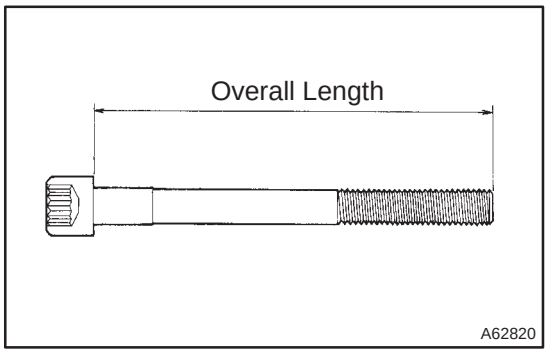


**51. INSPECT CYLINDER HEAD SET BOLT**

(a) Using a vernier calipers, measure the length of cylinder head bolt from the seat to the end.

**Standard length: 146.8 to 148.2 mm (5.780 to 5.835 in.)**
**Maximum length: 148.5 mm (5.846 in.)**

If the length exceeds the maximum, replace the bolt.

cardiagn.com

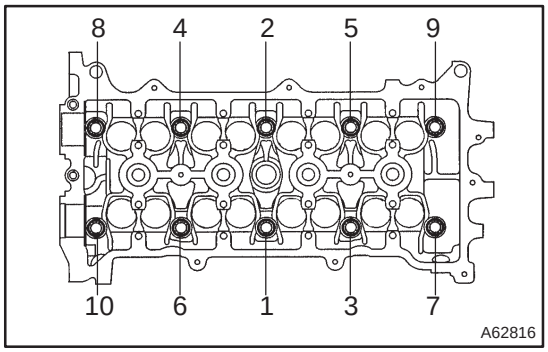


**52. INSTALL CYLINDER HEAD SUB–ASSY**

HINT:

The cylinder head bolts are tightened in 2 successive steps.

(a) Apply a light coat of engine oil on the threads of the cylinder head bolts.

(b) Using several steps, install and tighten the 10 cylinder head bolts and plate washers with a 10 mm hexagon wrench uniformly in the sequence shown in the illustration.

**Torque: 49 N·m (500 kgf·cm, 36 ft·lbf)**

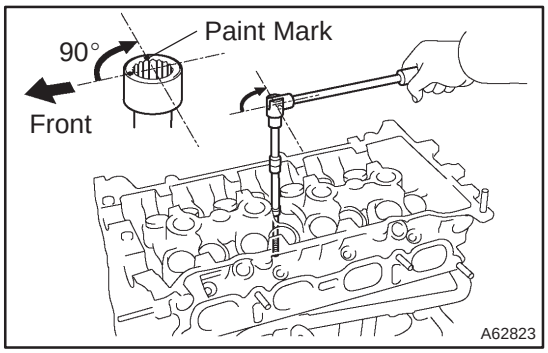


(c) Mark the front of the cylinder head bolt with paint.

(d) Retighten the cylinder head bolts 90° in the same sequence as step (b).

(e) Check that the paint mark of each bolt is at 90° angle to the front.

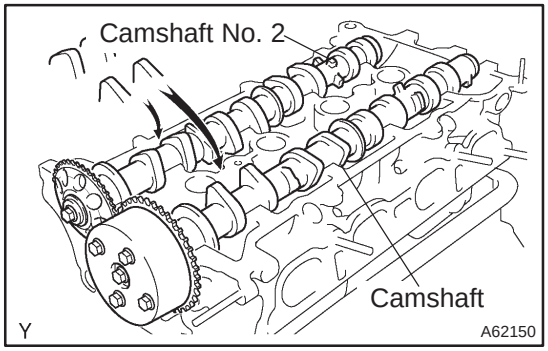


**53. INSTALL CAMSHAFT**

(a) Apply a light coat of engine oil on the camshaft journals.

(b) Place the 2 camshafts on the cylinder head as shown in the illustration.

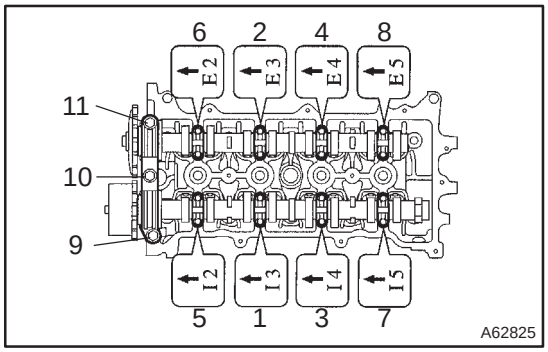


(c) Examine the front marks and numbers and tighten the bolts in the sequence shown in the illustration.

**Torque:**

**23 N·m (235 kgf·cm, 17 ft·lbf) for Bearing cap No. 1**

**13 N·m (133 kgf·cm, 10 ft·lbf) for Bearing cap No. 3**

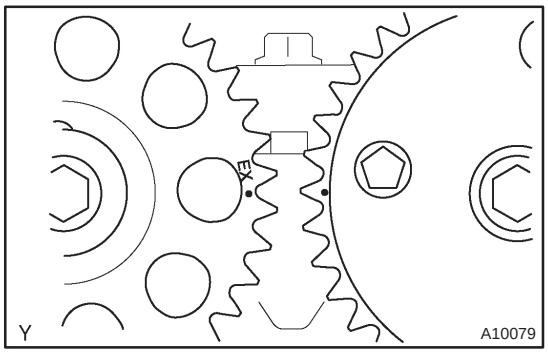


**54. INSTALL CHAIN SUB–ASSY**

(a) Set No. 1 cylinder to TDC/compression.

(1) Turn the camshafts using a wrench to align the timing marks of the 2 camshaft timing sprockets.

cardiagn.com

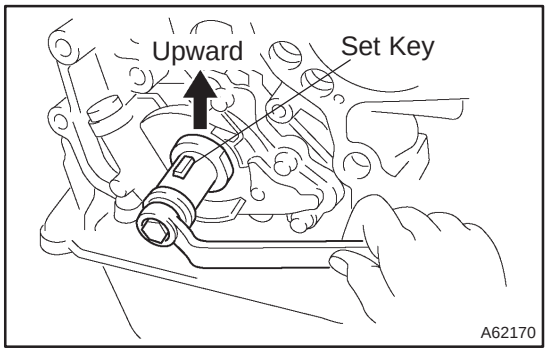


(2) Using a crankshaft pulley bolt, turn the crankshaft and set the set key on the crankshaft upward.

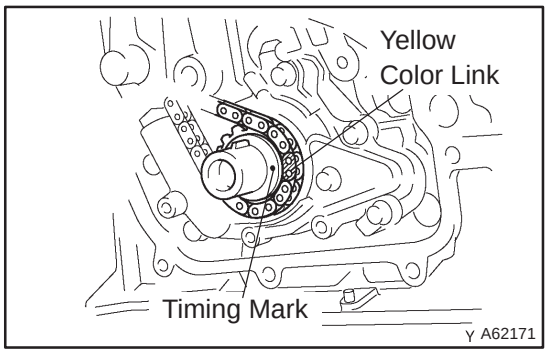


(b) Install the timing chain on the crankshaft timing sprocket with the yellow color link and the timing mark on the crankshaft timing sprocket aligned.

HINT:
Three yellow color links are on the chain.

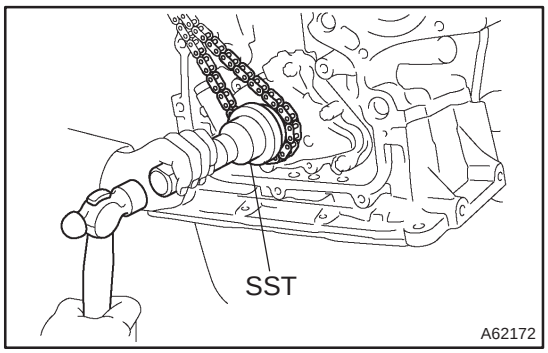


(c) Using SST, install the crankshaft timing sprocket.
SST 09223–22010

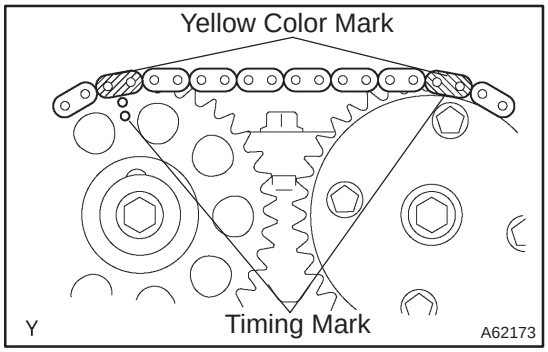


(d) Install the timing chain to the camshaft timing sprockets with the yellow color links and the timing marks on the camshaft timing sprockets aligned.

**55. INSTALL CHAIN VIBRATION DAMPER NO.1**

(a) Install chain vibration damper with the 2 bolts.
**Torque: 9.0 N·m (92 kgf·cm, 80 in.·lbf)**

**56. INSTALL CHAIN TENSIONER SLIPPER**

(a) Install the chain tensioner slipper with the bolt.
**Torque: 19 N·m (194 kgf·cm, 14 ft·lbf)**

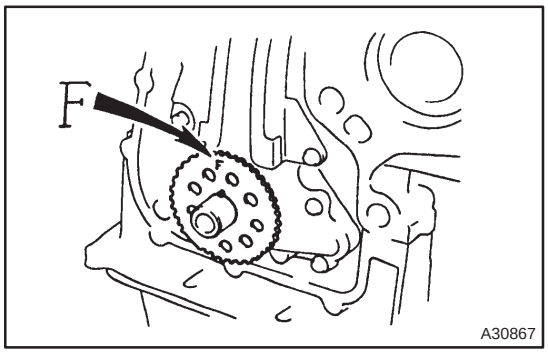


**57. INSTALL CRANKSHAFT POSITION SENSOR PLATE NO.1**

(a) Install the plate with the ”F” mark facing forward.



cardiagn.com

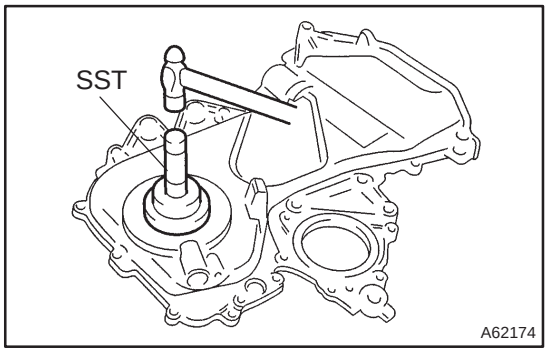


**58. INSTALL TIMING GEAR COVER OIL SEAL**

(a) Apply MP grease to a new oil seal lip.

(b) Using SST, tap in the oil seal until its surface is flush with the timing chain cover edge.

SST 09223–22010

**NOTICE:**

**Keep the lip free of foreign objects.**

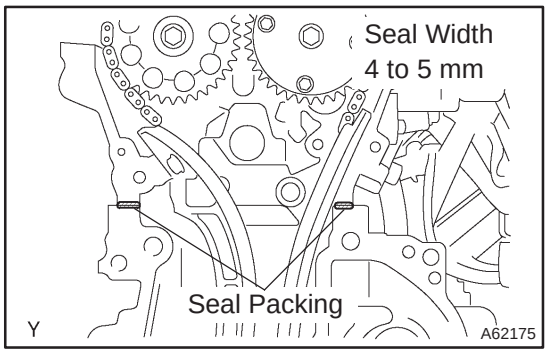


**59. INSTALL TIMING CHAIN OR BELT COVER SUB–ASSY**

(a) Remove any old packing material (FIPG) from the contact surface.

(b) Apply a continuous bead of seal packing (Diameter 3.5 mm to 4.5 mm (0.1379 to 0.177 in.)) as shown in the illustration.

**Seal packing:**

**Water pump part part No. 08826–00100 or equivalent**

**Other part part No. 08826–00080 or equivalent.**

**NOTICE:**

- **Remove any oil from the contact surface.**
- **Install the oil pan within 3 minutes after applying seal packing.**
- **Do not expose the seal to engine oil within 2 hours after installing.**

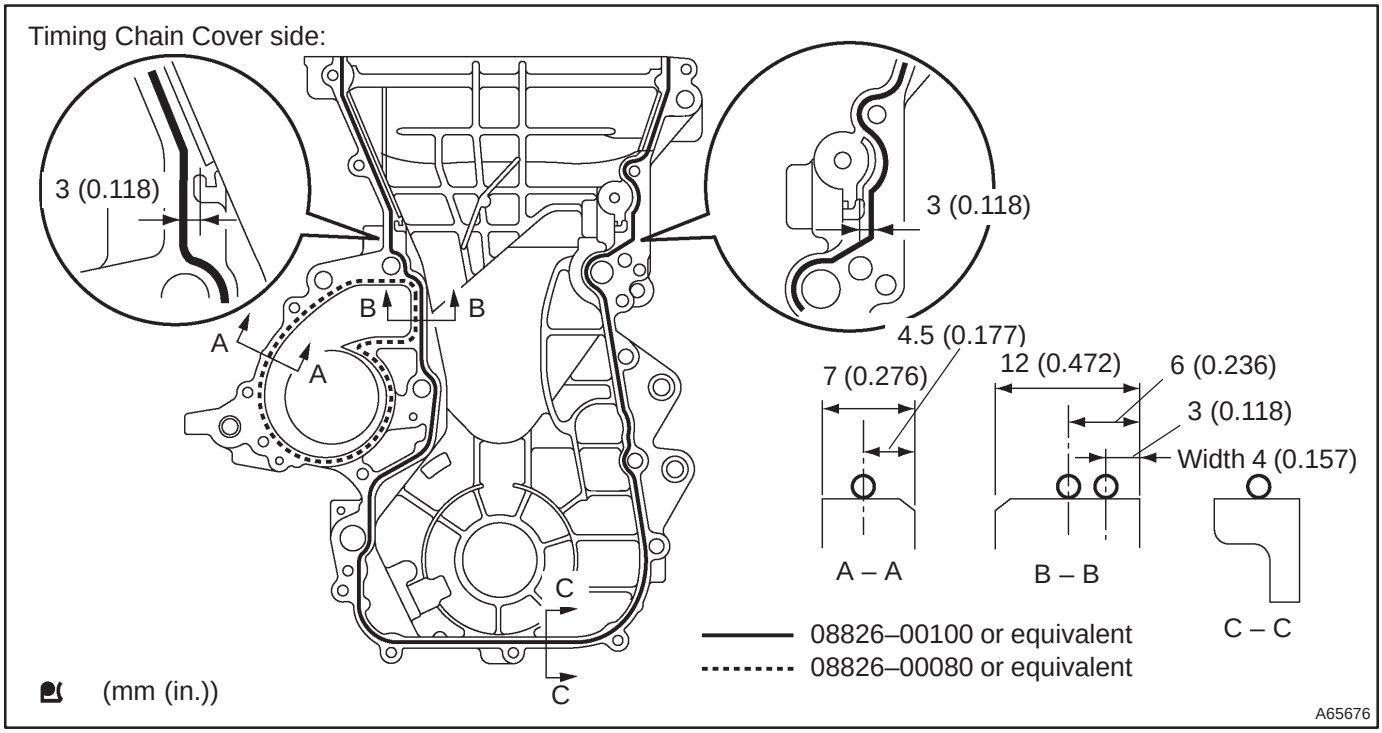


cardiagn.com

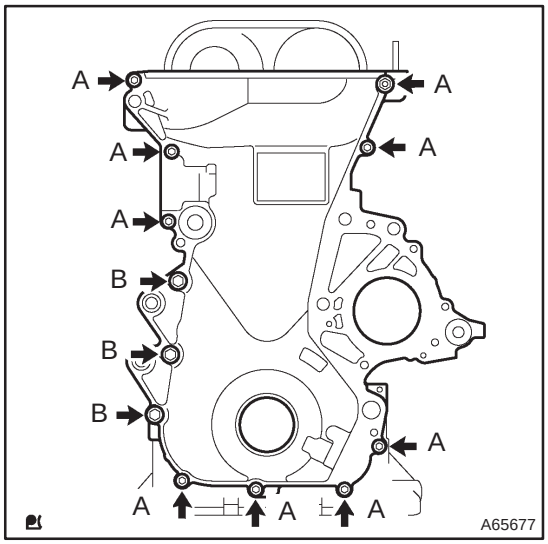


(c) Install the timing chain cover with the 11 bolts and nut.
**Torque:**
**13 N·m (133 kgf·cm, 10 ft·lbf) for A**
**19 N·m (194 kgf·cm, 14 ft·lbf) for B**

(d) Using a torx wrench socket (E8), install the stud bolt.
**Torque: 9.5 N·m (97 kgf·cm, 84 in.·lbf)**

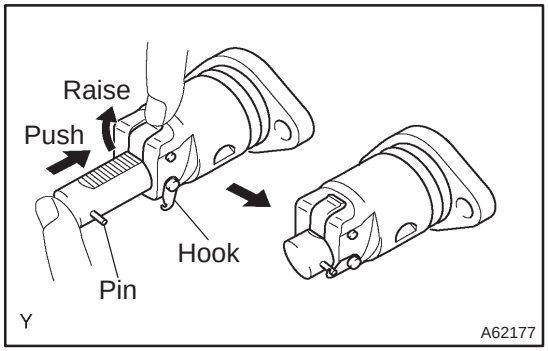


**60. INSTALL CHAIN TENSIONER ASSY NO.1**

(a) Check that the O–ring is clean, and set the hook as shown in the illustration.

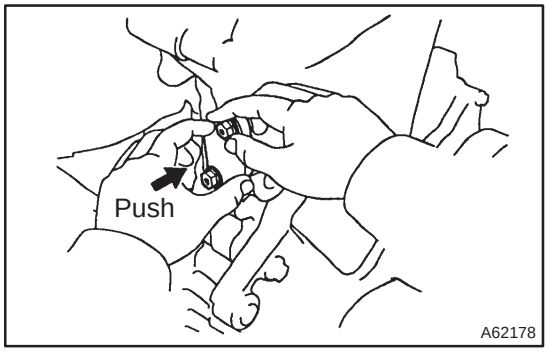


(b) Apply engine oil to the chain tensioner and install it with the 2 nuts.
**Torque: 9.0 N·m (92 kgf·cm, 80 in.·lbf)**

**NOTICE:**
**If the hook released the plunger during installation, re–hook the plunger by the hook to fix it.**

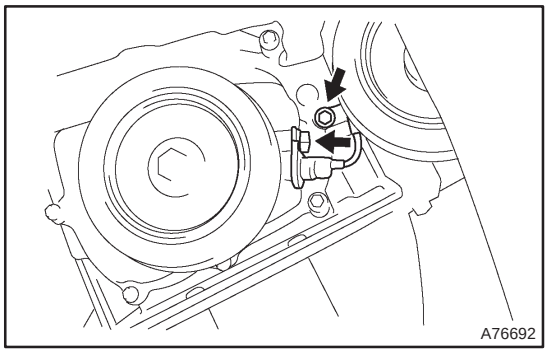


**61. INSTALL CRANKSHAFT POSITION SENSOR**

(a) Apply a light coat of the engine oil to the O–ring on the crankshaft position sensor.

(b) Install the crankshaft position sensor with the 2 bolts.
**Torque: 9.0 N·m (92 kgf·cm, 80 in.·lbf)**

cardiagn.com

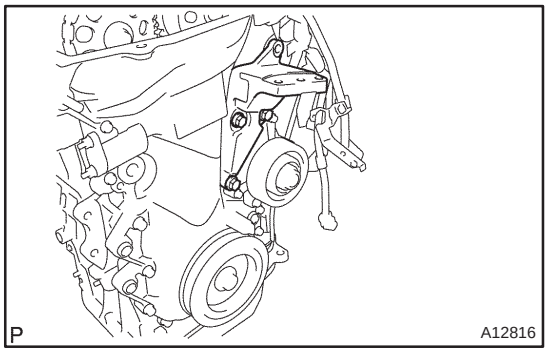


**62. INSTALL TRANSVERSE ENGINE ENGINE MOUNTING BRACKET**

(a) Install the transverse engine engine mounting bracket with the 3 bolts.
**Torque: 47 N·m (479 kgf·cm, 35 ft·lbf)**

**63. INSTALL WATER PUMP ASSY (See page 16–9)**

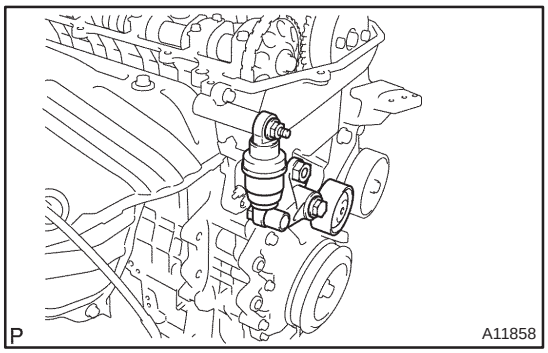


**64. INSTALL V–RIBBED BELT TENSIONER ASSY**

(a) Install the V–ribbed belt tensioner with the nut and bolt.
**Torque:**
**29 N·m (296 kgf·cm, 21 ft·lbf) for Nut**
**69 N·m (704 kgf·cm, 51 ft·lbf) for Bolt**

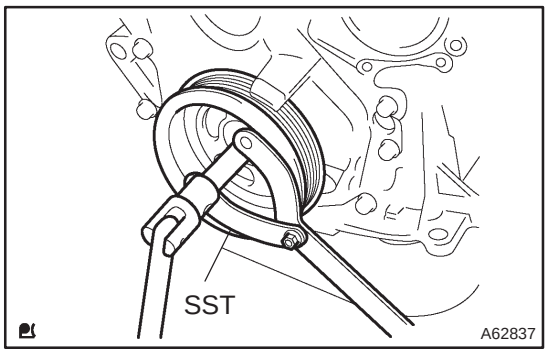


**65. INSTALL CRANKSHAFT PULLEY**

(a) Align the keyway of the pulley with the key located on the crankshaft and slide the pulley into place.

(b) Using SST, install the crankshaft pulley bolt.
SST 09960–10010 (09962–01000, 09963–01000)
**Torque: 138 N·m (1,407 kgf·cm, 102 ft·lbf)**

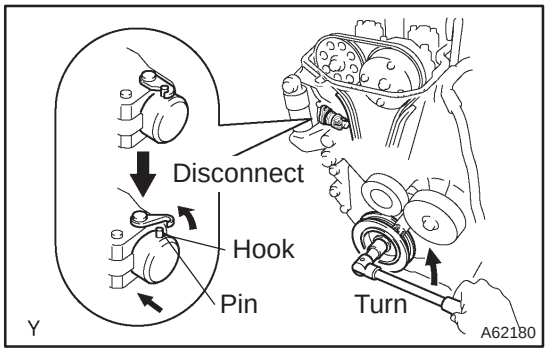


(c) Turn the crankshaft counterclockwise and take the hook off the knock pin to release the plunger.

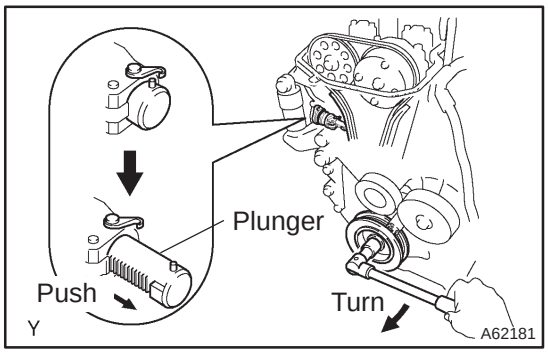


(d) Turn the crankshaft clockwise, and check that the plunger is extended.

HINT:
If the plunger does not be extended, press the slipper into the chain tensioner using a screwdriver so that the hook is took off from the knock pin and let the plunger can be extended.

cardiagn.com

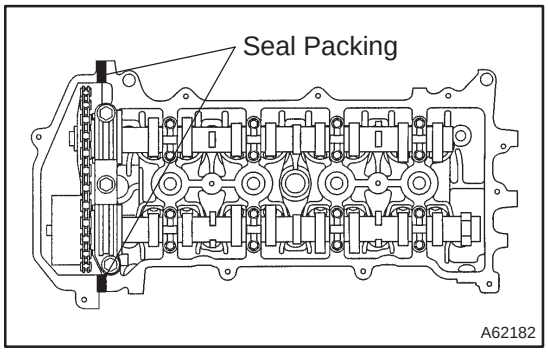


**66. INSTALL CYLINDER HEAD COVER SUB–ASSY**

(a) Remove any old packing (FIPG) material.

(b) Apply seal packing to the 2 locations as shown in the illustration.

**Seal packing: Part No. 08826–00080 or equivalent**

**NOTICE:**

- **Remove any oil from the contact surface.**
- **Install the cylinder head cover within 3 minutes after applying seal packing.**
- **Do not expose the seal to engine oil 2 hours after installing.**

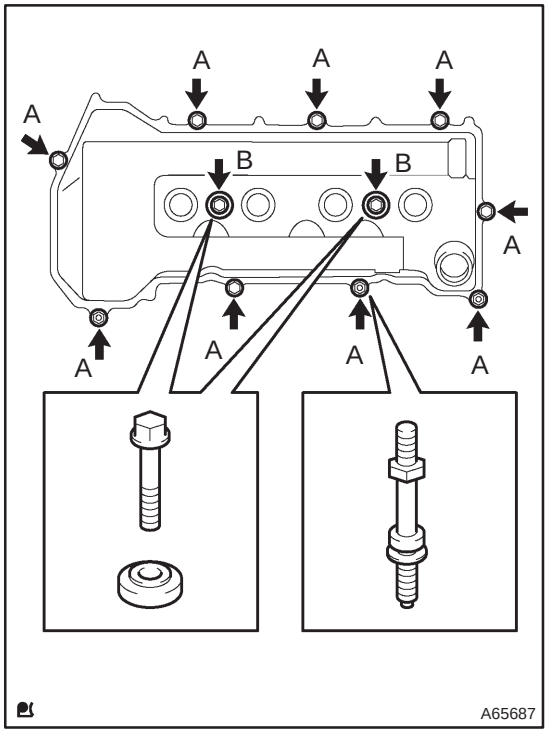


(c) Install the cylinder head cover and 3 cable brackets with the 9 bolts, 2 seal washers and 2 nuts. Tighten the bolts and nuts uniformly in the several steps.

**Torque:**
**11 N·m (112 kgf·cm, 8 ft·lbf) for A**
**9.0 N·m (92 kgf·cm, 80 in.·lbf) for B**

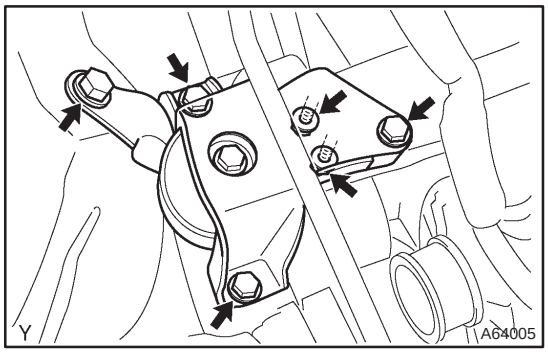


**67. INSTALL ENGINE MOUNTING INSULATOR SUB–ASSY RH**

(a) Install the engine mounting insulator with the 4 bolts and 2 nuts.

**Torque: 52 N·m (530 kgf·cm, 38 ft·lbf)**

cardiagn.com

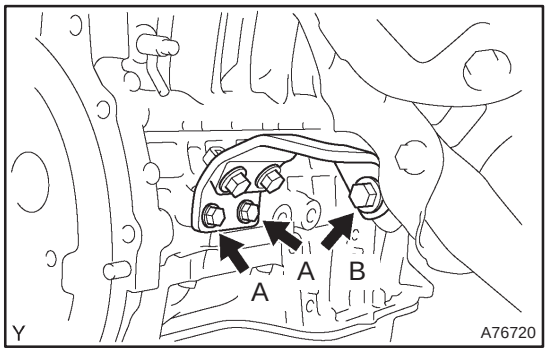


**68. INSTALL MANIFOLD STAY**

(a) Install the manifold stay with the 3 bolts.
**Torque:**
**37 N·m (377 kgf·cm, 27 ft·lbf) for Bolt A**
**49 N·m (500 kgf·cm, 36 ft·lbf) for Bolt B**

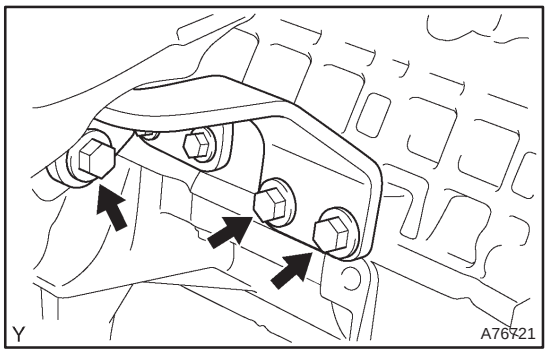


**69. INSTALL MANIFOLD STAY NO.2**

(a) Install the manifold stay with the 3 bolts.
**Torque: 49 N·m (500 kgf·cm, 36 ft·lbf)**

**70. INSTALL EXHAUST PIPE ASSY FRONT**
**(See page 15–2)**

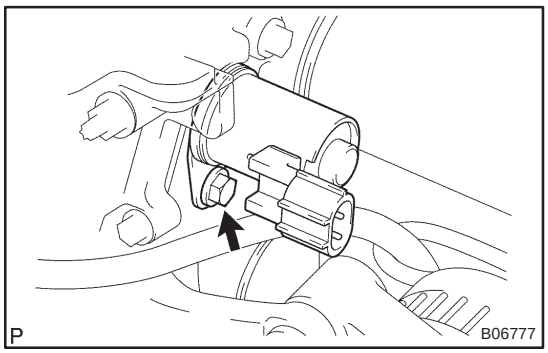


**71. INSTALL CAMSHAFT TIMING OIL CONTROL VALVE ASSY**

(a) Apply a light coat of engine oil on a new O–ring, and install it to the camshaft timing oil control valve.
(b) Install the camshaft timing oil control valve with the bolt.
**Torque: 9.0 N·m (92 kgf·cm, 80 in.·lbf)**

**72. INSTALL WATER BY–PASS PIPE NO.1**

(a) Install a new gasket and water by–pass pipe with the 2 nuts and 2 bolts.
**Torque: 9.0 N·m (92 kgf·cm, 80 in.·lbf)**

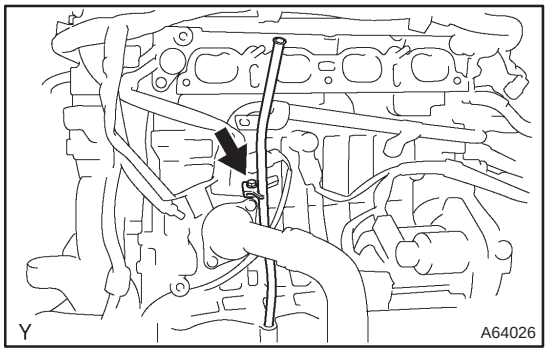


**73. INSTALL OIL LEVEL GAGE GUIDE**

(a) Apply a light coat of engine oil on a new O–ring, and install it to the oil level gage guide.
(b) Install the oil level gage guide with the bolt.
**Torque: 13 N·m (133 kgf·cm, 10 ft·lbf)**

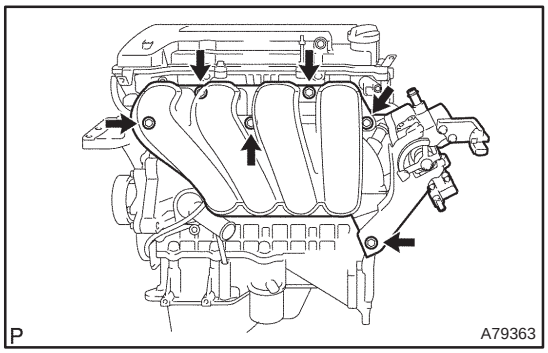


**74. INSTALL INTAKE MANIFOLD**

(a) Install a new gasket to the intake manifold.
(b) Install the intake manifold and the throttle body assembly with the 2 brackets, 4 bolts and 2 nuts.
**Torque: 30 N·m (306 kgf·cm, 22 ft·lbf)**
(c) Connect the 2 vacuum hoses to the intake manifold.
(d) Connect the 2 water hoses to the throttle body.

cardiagn.com

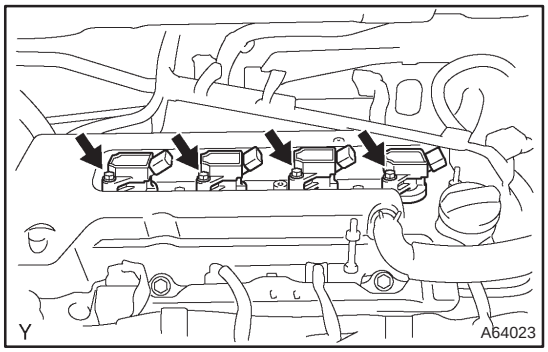


**75. INSTALL IGNITION COIL ASSY**

(a) Install the 4 ignition coils with the 4 bolts.
**Torque: 9.0 N·m (92 kgf·cm, 80 in.·lbf)**

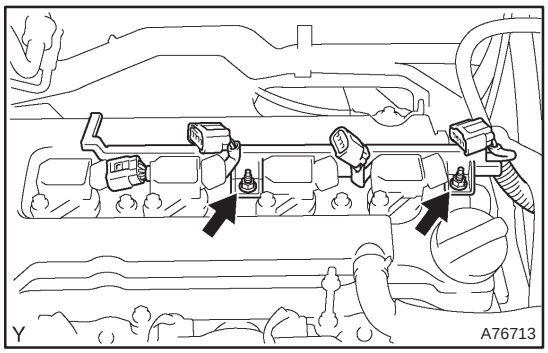


(b) Install the engine wire with the 2 nuts.
**Torque: 9.0 N·m (92 kgf·cm, 80 in.·lbf)**

**76. INSTALL GENERATOR ASSY (See page 19–7)**

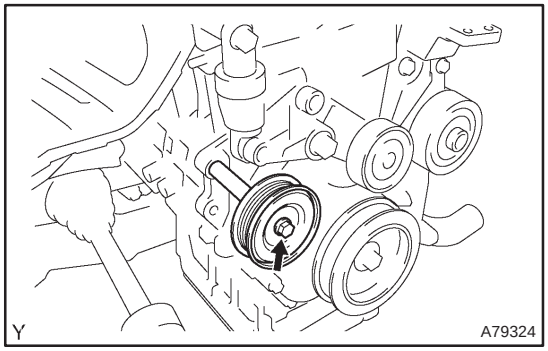


**77. INSTALL V–RIBBED IDLER ASSY NO.1**

(a) Install the tube and idler with the nut and bolt.
**Torque: 39.2 N·m (400 kgf·cm, 29 ft·lbf)**

**78. INSTALL ACCELERATOR CONTROL CABLE ASSY (1ZZ–FE ENGINE TYPE) (See page 10–9)**

**79. INSTALL ACCELERATOR CONTROL CABLE ASSY (3ZZ–FE ENGINE TYPE) (See page 10–15)**

**80. INSTALL AIR CLEANER HOSE NO.1**
**Torque: 1.5 N·m (15 kgf·cm, 13 in.·lbf)**

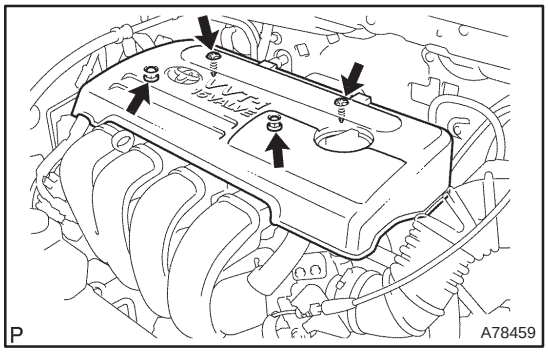


**81. INSTALL CYLINDER HEAD COVER NO.2**

(a) Install the cylinder head cover with the 2 nuts and 2 clips.
**Torque: 7.0 N·m (71 kgf·cm, 62 in.·lbf)**

**82. INSTALL FRONT WHEEL RH**
**Torque: 103 N·m (1,050 kgf·cm, 76 ft·lbf)**

**83. ADD ENGINE COOLANT (See page 16–7)**

**84. INSPECT COMPRESSION (See page 14–1)**
SST 09992–00500

**85. INSPECT CO/HC (See page 14–1)**

**86. INSPECT IGNITION TIMING (See page 14–1)**
SST 09843–18040

**87. CHECK FOR ENGINE COOLANT LEAKS (See page 16–7)**

**88. CHECK FOR ENGINE OIL LEAKS**



cardiagn.com

# DRIVE BELT (1CD–FTV)

141C1–01

## REPLACEMENT

1. **REMOVE RADIATOR SUPPORT OPENING COVER**
2. **REMOVE ENGINE ROOM COVER SIDE**
3. **REMOVE ENGINE UNDER COVER RH**

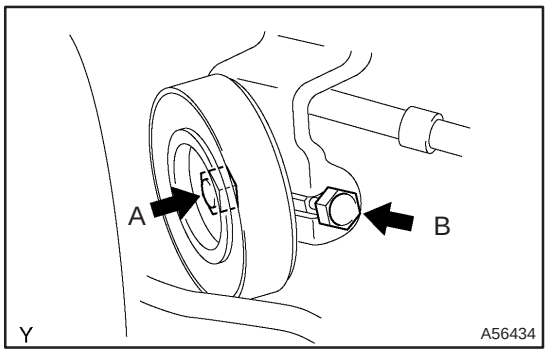


4. **REMOVE V (COOLER COMPRESSOR TO CRANKSHAFT PULLEY) BELT NO.1**
   (a) Loosen nut A and bolt B.
   (b) Remove the V–ribbed belt.

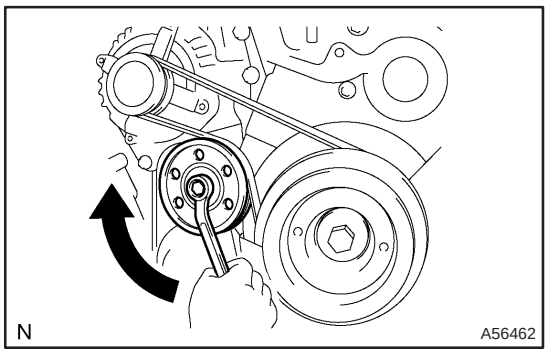


5. **REMOVE GENERATOR V BELT**
   (a) Turn the V–ribbed belt tensioner assy clockwise slowly, and remove the V–ribbed belt.

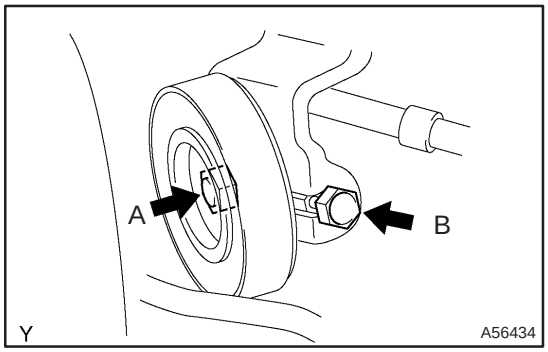


6. **ADJUST V (COOLER COMPRESSOR TO CRANKSHAFT PULLEY) BELT NO.1**
   (a) Install the V–ribbed belt.
   (b) Tighten bolt B and adjust the drive belt tension. (See page 14–266)
   (c) Tighten nut A.
   **Torque: 38 N·m (390 kgf·cm, 28 ft·lbf)**

cardiagn.com

# ENGINE (1AZ–FE)

140D1–02

## INSPECTION

1. **INSPECT COOLANT (See page 16–13)**
2. **INSPECT ENGINE OIL (See page 17–6)**
3. **INSPECT BATTERY**
   **Standard specific gravity: 1.25 to 1.29 at 20°C (68°F)**
4. **INSPECT AIR CLEANER FILTER ELEMENT SUB–ASSY**
5. **INSPECT SPARK PLUG (See page 18–9)**
6. **INSPECT V–RIBBED BELT**

7. **INSPECT IGNITION TIMING**

(a) Warm up engine.

(b) When using hand–held tester:

(1) Connect the hand–held tester to the DLC3.

(2) Enter DATA LIST MODE on the hand–held tester.

**Ignition timing: 8 to 12° BTDC**

HINT:

Please refer to the hand–held tester operator's manual if you need help to select DATA LIST.

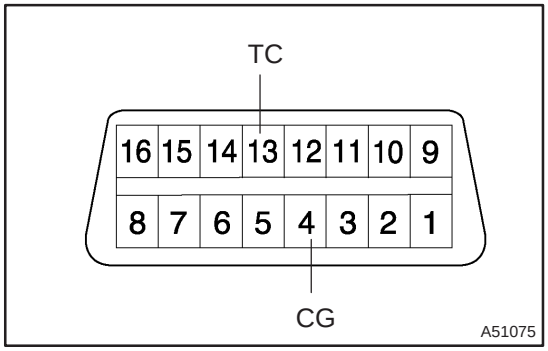


(c) When not using hand–held tester:

(1) Using SST, connect terminals 13 (TC) and 4 (CG) of DLC3.

SST 09843–18040

**NOTICE:**

- **Make sure of the terminal numbers before connecting them. Connection with a wrong terminal can damage the engine.**
- **Turn OFF all electrical systems before connecting the terminals.**
- **Operate the inspection after the cooling fan motor is turned OFF.**

(2) Remove the cylinder head cover No.2.

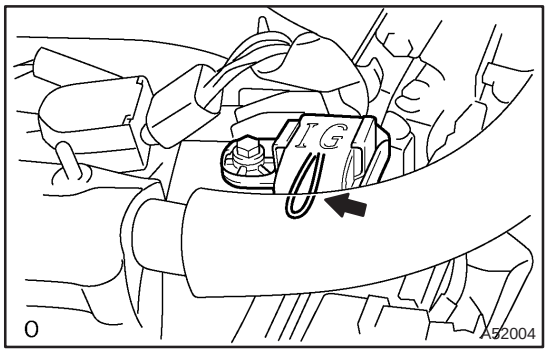


(3) Pull out the wire harness as shown in the illustration. Connect the clip of the timing light to the engine.

**NOTICE:**

- **Use a timing light which detects the first signal.**
- **After checking, be sure to wrap the wire harness with tape.**

(4) Inspect ignition timing at idle.

**Ignition timing: 8 to 12° BTDC**

**NOTICE:**

**When checking the ignition timing, shift the transmission to the neutral position.**

HINT:

Run the engine at 1,000 to 1,300 rpm for 5 seconds, check that the engine rpm returns to the idle speed.

cardiagn.com

(5) Disconnect terminals 13 (TC) and 4 (CG) of DLC3.
(6) Inspect ignition timing at idle.
**Ignition timing: 5 to 15° BTDC**
(7) Confirm that ignition timing to go advanced angle side when the engine rpm is increased.
(8) Remove the timing light.

**8. INSPECT ENGINE IDLE SPEED**

(a) Warm up engine.
(b) When using hand–held tester:
(1) Connect the hand–held tester to the DLC3.
**Idle speed: 650 to 750 rpm**

**NOTICE:**
- **Check the idle speed with the cooling fan OFF.**
- **Switch off all accessories and air conditioning before connecting the test prove to the terminal.**

HINT:
Please refer to the hand–held tester operator's manual if you need help to select DATA LIST.

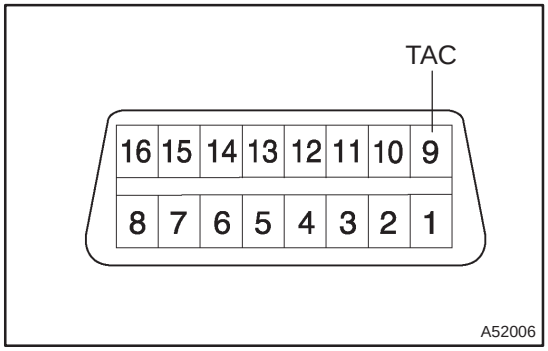


(c) When not using hand–held tester.
(1) Using SST, connect the tachometer test prove to terminal 9 (TAC) of DLC3.
SST 09843–18040
(2) Check the idle speed.
**Idle speed: 650 to 750 rpm**

**9. INSPECT COMPRESSION**

(a) Warm up and stop the engine.
(b) Disconnect the injector connectors.
(c) Remove the ignition coil.
(d) Remove the spark plugs.
(e) Inspect cylinder compression pressure.
SST 09992–00500
(1) Insert a compression gauge into the spark plug hole.
(2) Fully open the throttle.

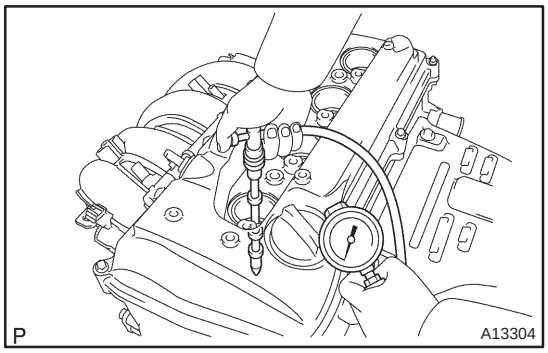


cardiagn.com

(3) While cranking the engine, measure the compression pressure.

**Compression pressure:**
**1,300 kPa (13.3 kgf/cm$^2$, 189 psi)**
**Minimum pressure:**
**1000 kPa (10.2 kgf/cm$^2$, 145 psi)**
**Difference between each cylinder:**
**100 kPa (1.0 kgf/cm$^2$, 14 psi)**

**NOTICE:**

- **Always use a fully charged battery to obtain engine speed of 250 rpm or more.**
- **Check other cylinder's compression pressure in the same way.**
- **This measurement must be done in as short a time as possible.**

(4) If the cylinder compression is low, pour a small amount of engine oil into the cylinder through the spark plug hole and inspect again.

HINT:

- If adding oil increases the compression, the piston rings and/or cylinder bore may be worn or damaged.
- If pressure stays low, a valve may be sticking or seating improperly, or there may be leakage past the gasket.

**10. INSPECT CO/HC**

(a) Start the engine.
(b) Run the engine at 2,500 rpm for approximately 180 seconds.
(c) Insert CO/HC meter testing probe at least 40 cm (1.3 ft) into the tailpipe during idling.
(d) Check CO/HC concentration at idle.
**Idle CO concentration: 0 to 0.5 %**
**Idle HC concentration: Applicable local regulation**
(e) If the CO/HC concentration does not conform to specifications, perform troubleshooting in the order given below.
(1) Check heated oxygen sensor operation. (See page 12–6)
(2) See the table below for possible causes, and then inspect and repair the applicable causes if necessary.

cardiagn.com

| CO | HC | Problems | Causes |
|---|---|---|---|
| Normal | High | Rough idle | 1. Faulty ignitions:<br>• Incorrect timing<br>• Fouled, shorted or improperly gapped plugs<br>2. Incorrect valve clearance<br>3. Leaks in intake and exhaust valves<br>4. Leaks in cylinders |
| Low | High | Rough idle<br>(Fluctuating HC reading) | 1. Vacuum leaks:<br>• PCV hoses<br>• Intake manifold<br>• Throttle body<br>• ISC valve<br>• Brake booster line<br>2. Lean mixture causing misfire |
| High | High | Rough idle<br>(Black smoke from exhaust) | 1. Restricted air filter<br>2. Plugged PCV valve<br>3. Faulty EFI systems:<br>• Faulty pressure regulator<br>• Defective water temperature sensor<br>• Defective mass air flow meter<br>• Faulty ECM<br>• Faulty injectors<br>• Faulty throttle position sensor |

cardiagn.com

# ENGINE (1AZ–FSE)

141CP–01

## INSPECTION

1. **INSPECT COOLANT (See page 16–25)**
2. **INSPECT ENGINE OIL(See page 17–13)**
3. **INSPECT BATTERY**
   **Standard specific gravity: 1.25 to 1.29 at 20°C (68°F)**
4. **INSPECT AIR CLEANER FILTER ELEMENT SUB–ASSY**
5. **INSPECT SPARK PLUG (See page 18–14)**
6. **INSPECT V–RIBBED BELT**

7. **INSPECT IGNITION TIMING**

(a) Warm up engine.

(b) When using hand–held tester:

(1) Connect the hand–held tester to the DLC3.

(2) Enter DATA LIST MODE on the hand–held tester.

**Ignition timing: 8 to 12° BTDC**

HINT:

Please refer to the hand–held tester operator's manual if you need help to select DATA LIST.

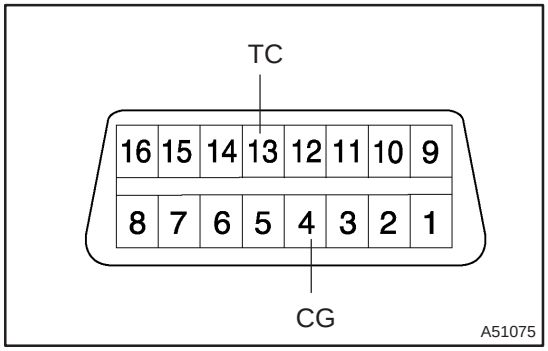


(c) When not using hand–held tester:

(1) Using SST, connect terminals 13 (TC) and 4 (CG) of DLC3.

SST 09843–18040, 09843–18020

**NOTICE:**

- **Make sure of the terminal numbers before connecting them. Connection with a wrong terminal can damage the engine.**
- **Turn OFF all electrical systems before connecting the terminals.**
- **Operate the inspection after the cooling fan motor is turned OFF**

(2) Remove the cylinder head cover No.2.

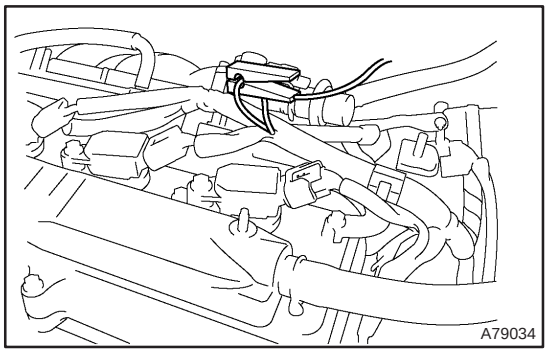


(3) Pull out the wire harness as shown in the illustration. Connect the clip of the timing light to the engine.

**NOTICE:**

- **Use a timing light which detects the first signal.**
- **After checking, be sure to wrap the wire harness with tape.**

(4) Inspect ignition timing at idle.

**Ignition timing: 8 to 12° BTDC**

**NOTICE:**

**When checking the ignition timing, shift the transmission to the neutral position.**

HINT:

Run the engine at 1,000 to 1,300 rpm for 5 seconds, check that the engine rpm returns to the idle speed.

(5) Disconnect terminals 13 (TC) and 4 (CG) of DLC3.



cardiagn.com

(6) Inspect ignition timing at idle.
**Ignition timing: 5 to 23° BTDC**
(7) Confirm that ignition timing to go advanced angle side when the engine rpm is increased.
(8) Remove the timing light.

**8. INSPECT ENGINE IDLE SPEED**

(a) Warm up engine.
(b) When using hand–held tester:
(1) Connect the hand–held tester to the DLC3.
**Idle speed: 625 to 725 rpm**

**NOTICE:**
- **Check the idle speed with the cooling fan OFF.**
- **Switch off all accessories and air conditioning before connecting the test prove to the terminal.**

HINT:
Please refer to the hand–held tester operator's manual if you need help to select DATA LIST.

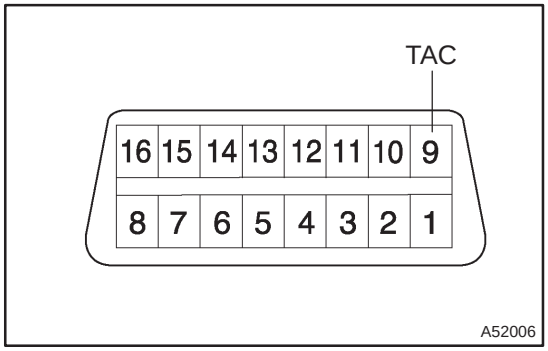


(c) When not using hand–held tester:
(1) Using SST, connect the tachometer test prove to terminal 9 (TAC) of DLC3.
SST 09843–18040
(2) Check the idle speed.
**Idle speed: 625 to 725 rpm**

**9. INSPECT COMPRESSION**

(a) Warm up and stop the engine.
(b) Disconnect the injector connectors.
(c) Remove the ignition coil.
(d) Remove the spark plugs.

cardiagn.com

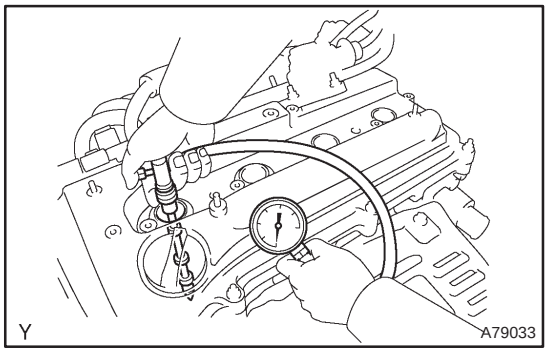


(e) Inspect cylinder compression pressure.
SST 09992–00500
(1) Insert a compression gauge into the spark plug hole.
(2) Fully open the throttle.
(3) While cranking the engine, measure the compression pressure.
**Compression pressure:**
**1,300 kPa (13.3 kgf/cm$^2$, 189 psi)**
**Minimum pressure:**
**1000 kPa (10.2 kgf/cm$^2$, 145 psi)**
**Difference between each cylinder:**
**100 kPa (1.0 kgf/cm$^2$, 14 psi)**

**NOTICE:**
- **Always use a fully charged battery to obtain engine speed of 250 rpm or more.**
- **Check other cylinder's compression pressure in the same way.**
- **This measurement must be done in as short a time as possible.**

(4) If the cylinder compression is low, pour a small amount of engine oil into the cylinder through the spark plug hole and inspect again.

HINT:
- If adding oil increases the compression, the piston rings and/or cylinder bore may be worn or damaged.
- If pressure stays low, a valve may be sticking or seating improperly, or there may be leakage past the gasket.

**10. INSPECT CO/HC**

(a) Start the engine.
(b) Run the engine at 2,500 rpm for approximately 180 seconds.
(c) Insert CO/HC meter testing probe at least 40 cm (1.3 ft) into the tailpipe during idling.
(d) Check CO/HC concentration at idle.
**Idle CO concentration: 0 to 0.5 %**
**Idle HC concentration: Applicable local regulation**
(e) If the CO/HC concentration does not conform to specifications, perform troubleshooting in the order given below.
(1) Check heated oxygen sensor operation. (See page 12–6)
(2) See the table below for possible causes, and then inspect and repair the applicable causes if necessary.

cardiagn.com

| CO | HC | Problems | Causes |
|---|---|---|---|
| Normal | High | Rough idle | 1. Faulty ignitions:<br>• Incorrect timing<br>• Fouled, shorted or improperly gapped plugs<br>2. Incorrect valve clearance<br>3. Leaks in intake and exhaust valves<br>4. Leaks in cylinders |
| Low | High | Rough idle<br>(Fluctuating HC reading) | 1. Vacuum leaks:<br>• PCV hoses<br>• Intake manifold<br>• Throttle body<br>• ISC valve<br>• Brake booster line<br>2. Lean mixture causing misfire |
| High | High | Rough idle<br>(Black smoke from exhaust) | 1. Restricted air filter<br>2. Plugged PCV valve<br>3. Faulty EFI systems:<br>• Faulty pressure regulator<br>• Defective water temperature sensor<br>• Defective mass air flow meter<br>• Faulty ECM<br>• Faulty injectors<br>• Faulty throttle position sensor |

cardiagn.com

# ENGINE (1CD–FTV)

140DD–03

## INSPECTION

1. **INSPECT COOLANT (See page 16–37)**
2. **INSPECT ENGINE OIL (See page 17–20)**
3. **INSPECT BATTERY (See page 19–26)**
4. **INSPECT AIR CLEANER FILTER ELEMENT SUB–ASSY**

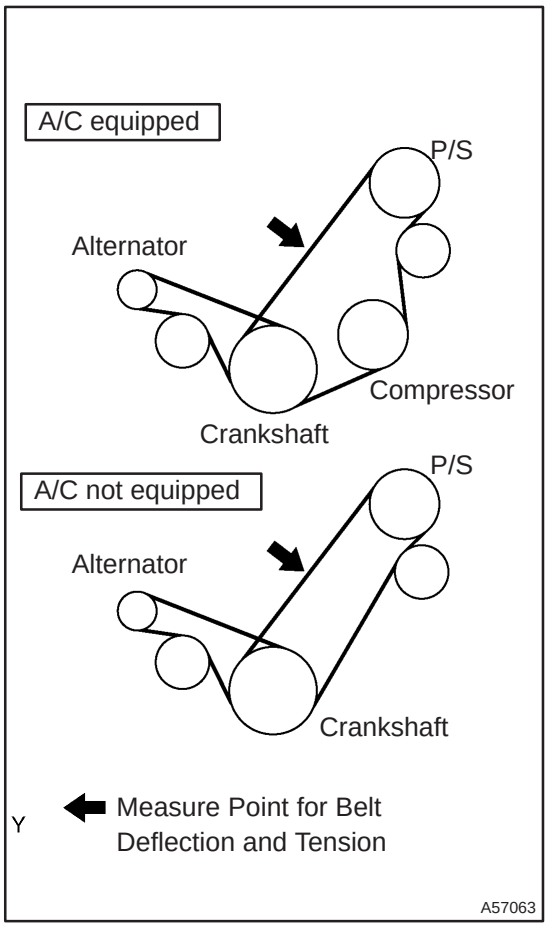


5. **INSPECT DRIVE BELT**

(a) Inspect vane pump V belt.

(1) Measure the belt deflection

**Pressing force: 98 N·m (10 kgf 22 lbf)**

| | New belt mm (in.) | Used belt mm (in.) |
|---|---|---|
| A/C equipped | 9.5 to 11.5 (0.37 to 0.45) | 12.5 to 15.5 (0.49 to 0.61) |
| A/C not equipped | 10 to 12 (0.39 to 0.47) | 14 to 17 (0.55 to 0.67) |

(2) Measure the belt tension

| | New belt N (kgf, lbf) | Used belt N (kgf, lbf) |
|---|---|---|
| A/C equipped | 519 to 755 (53 to 77, 117 to 170) | 196 to 392 (20 to 40, 44 to 88) |
| A/C not equipped | 686 to 784 (70 to 80, 154 to 176) | 294 to 441 (30 to 45, 66 to 99) |

**NOTICE:**

- **Check the drive belt deflection at the specified point.**
- **When installing a new belt, set its tension value as specified.**
- **When inspecting the belt which is used over 5 minutes, apply the specifications of "Used Belt."**
- **When reinstalling the belt which is used over 5 minutes, adjust its deflection and tension to the medium value in each specification of "Used Belt."**
- **V–ribbed belt tension and deflection should be checked after 2 revolutions of engine cranking.**
- **When using a belt tension gauge, confirm the accuracy by using a master gauge first.**

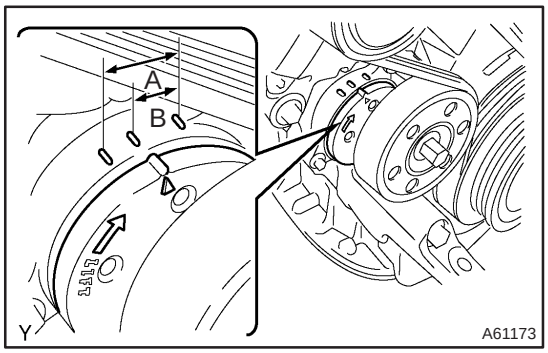


(b) Inspect generator V belt.

(1) Check that the tension indicator is within range A on the auto tensioner scale.

If the tension is not within the A range, replace the belt with a new one.

HINT:

When replacing the drive belt with a new one, the belt tension should be within the B range.

cardiagn.com

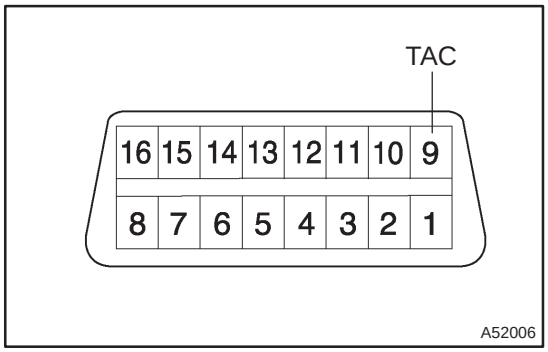


**6. INSPECT ENGINE IDLE SPEED**

(a) Using SST, connect a tachometer test prove to terminal 9 (TAC) of DLC3.
SST 09843–18040

(b) Check the idle speed.
**Idle speed: 750 to 850 rpm**

**NOTICE:**

- **Check the idle speed with the cooling fan OFF.**
- **Switch off all accessories and air conditioning before connecting the test prove to the terminal.**

**7. INSPECT MAXIMUM SPEED**

(a) Start the engine.

(b) Depress the accelerator pedal to the limit.

(c) Check the maximum speed.
**Maximum speed: 5,100 to 5,250 rpm**

**8. INSPECT COMPRESSION**

(a) Warm up the engine to normal operating temperature, and stop the engine.

(b) Remove the glow plugs. (See page 19–33)

(c) Disconnect the injector connectors.

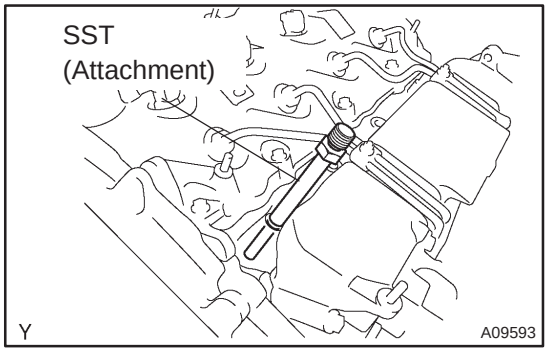


(d) Inspect cylinder compression pressure.

(1) Install SST (attachment) to the glow plug hole.
SST 09992–00025 (09992–00121)
**Torque: 12 N·m (125 kgf·cm, 95 ft·lbf)**

cardiagn.com

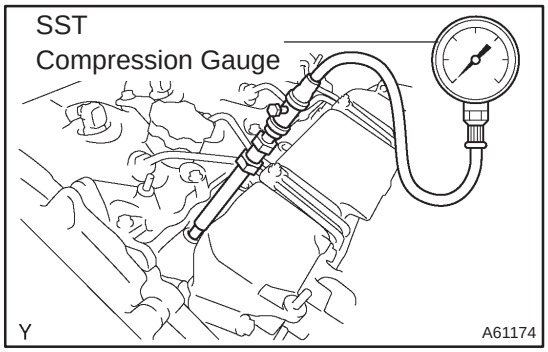


(2) Connect SST (compression gauge) to the SST (attachment).

SST 09992–00025 (09992–00211)

(3) Fully open the throttle valve, and start the engine.

(4) While cranking the engine, measure the compression pressure.

**NOTICE:**

- **Always use a fully charged battery to obtain engine speed of 250 rpm or more.**
- **Check other cylinder compression pressure in the same way.**
- **This measurement must be done in as short a time as possible.**

  **Compression pressure:**
  **2,628 kPa (26.8 kgf/cm$^2$, 381 psi) or more**
  **Minimum pressure:**
  **2,157 kPa (22.0 kgf/cm$^2$, 312 psi) or more**
  **Difference between each cylinder:**
  **490 kPa (5.0 kgf/cm$^2$, 71 psi) or less**

  (5) If the cylinder compression is low, pour a small amount of engine oil into the cylinder through the glow plug hole and inspect again.

HINT:

- If adding oil raises the compression, there are chances of the piston rings and/or cylinder bore wear or damage.
- If pressure stays low, a valve may be sticking or seating improperly, or there may be leakage past the gasket.

cardiagn.com

# ENGINE (1ZZ–FE/3ZZ–FE)

140KR–02

## INSPECTION

1. **INSPECT COOLANT (See page 16–1)**
2. **INSPECT ENGINE OIL (See page 17–1)**
3. **INSPECT BATTERY (See page 19–5)**
4. **INSPECT AIR CLEANER FILTER ELEMENT SUB–ASSY**
5. **INSPECT SPARK PLUG (See page 18–3)**
6. **INSPECT FAN AND GENERATOR V BELT**

HINT:
You don't need to check the belt deflection because auto tensioner is adopted.

7. **INSPECT IGNITION TIMING**

(a) Warm up engine.

(b) When using hand–held tester:

(1) Connect the hand–held tester to the DLC3.

(2) Enter DATA LIST MODE on the hand–held tester.

**Ignition timing: 8 to 12°BTDC**

HINT:
Please refer to the hand–held tester operator's manual if you need help to select DATA LIST.

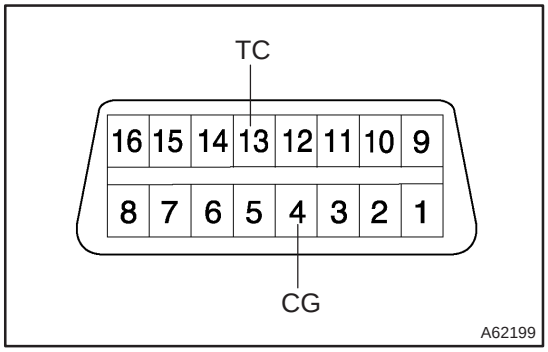


(c) When not using hand–held tester:

(1) Using SST, connect terminal 13 (TC) and 4 (CG) of the DLC3.

SST 09843–18040

**NOTICE:**

- **Make sure of the terminal numbers before connecting them. Connection with a wrong terminal can damage the engine.**
- **Turn OFF all electrical systems before connecting the terminals.**
- **Operate the inspection after the cooling fan motor is turned OFF**

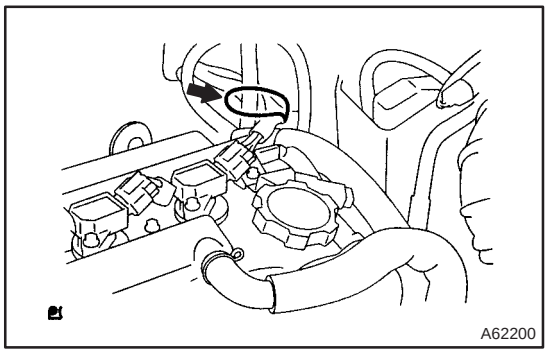


(2) Remove the 2 nuts, and 2 clips, and then remove the cylinder head cover.

(3) Pull out the wire harness as shown in the illustration.

(4) Connect the clip of the timing light to the engine.

**NOTICE:**

- **Use a timing light which detects the first signal.**
- **After checking, be sure to wrap the wire harness with tape.**



cardiagn.com

(5) Inspect ignition timing at idle.

**Ignition timing: 8 to 12°BTDC**

**NOTICE:**

**When checking the ignition timing, shift the transmission to the neutral position.**

HINT:

Run the engine at 1,000 to 1,300 rpm for 5 seconds, check that the engine rpm returns to the idle speed.

(6) Disconnect the terminal 13 (TC) and 4 (CG) of the DLC3.

(7) Inspect ignition timing at idle.

**Ignition timing:**

**10 to 18 °BTDC (1ZZ–FE)**

**3.5 to 11.5 °BTDC (3ZZ–FE)**

(8) Confirm that ignition timing to go advanced angle side when the engine rpm is increased.

(9) Remove the timing light.

(10) Install the cylinder head cover with the 2 nuts and 2 clips.

**Torque: 7.0 N·m (71 kgf·cm, 62 in.·lbf)**

**8. INSPECT ENGINE IDLE SPEED**

(a) Warm up engine.

(b) When using hand–held tester:

(1) Connect the hand–held tester to the DLC3.

HINT:

Please refer to the hand–held tester operator's manual if you need help to select DATA LIST.

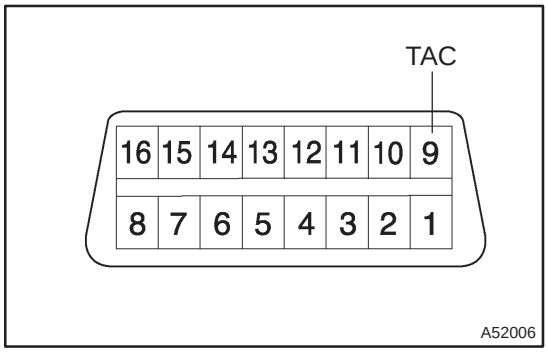


(c) When not using hand–held tester:

(1) Using SST, connect the tachometer test prove to terminal 9 (TAC) of DLC3.

SST 09843–18040

(d) Check the idle speed.

**Idle speed: 600 to 700 rpm**

**NOTICE:**

- **Check the idle speed with the cooling fan OFF.**
- **Switch off all accessories and air conditioning before connecting the test prove to the terminal.**

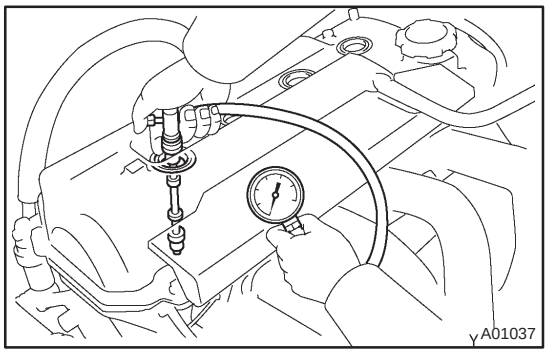


**9. INSPECT COMPRESSION**

(a) Warm up and stop the engine.

(b) Remove the ignition coil.

(c) Remove the spark plugs.

(d) Inspect cylinder compression pressure.

SST 09992–00500

(1) Insert a compression gauge into the spark plug hole.

(2) Fully open the throttle.

cardiagn.com

(3) While cranking the engine, measure the compression pressure.

**Compression pressure :**
**1,300 kPa (13.3 kgf·cm$^2$, 189 psi)**
**Minimum pressure: 1,000 kPa (10.2 kgf·cm$^2$, 145 psi)**
**Difference between each cylinder:**
**100 kPa (1.0 kgf·cm$^2$, 14 psi)**

**NOTICE:**

- **Always use a fully charged battery to obtain engine speed of 250 rpm or more.**
- **Check other cylinder's compression pressure in the same way.**
- **This measurement must be done in as short a time as possible.**

(4) If the cylinder compression in one or more cylinders is low, pour a small amount of engine oil into the cylinder through the spark plug hole and repeat steps (1) through (3) for the cylinders that have low compression.

HINT:

- If adding oil helps increase the compression, the piston rings and/or cylinder bore may be worn or damaged.
- If pressure stays low, a valve may be sticking or seating improperly, or there may be leakage past the gasket.

**10. INSPECT CO/HC**

(a) Start the engine.
(b) Run the engine at 2,500 rpm for approximately 180 seconds.
(c) Insert CO/HC meter testing probe at least 40 cm (1.3 ft) into the tailpipe during idling.
(d) Check CO/HC concentration at idle.
**Idle CO concentration: 0 to 0.5 %**
**Idle HC concentration: Applicable local regulation**

If the CO/HC concentration does not conform to specifications, perform troubleshooting in the order given below.

- Check heated oxygen sensor operation.
- See the table below for possible causes, and then inspect and repair the applicable causes if necessary.

cardiagn.com

| CO | HC | Problems | Causes |
|---|---|---|---|
| Normal | High | Rough idle | 1. Faulty ignitions:<br>• Incorrect timing<br>• Fouled, shorted or improperly gapped plugs<br>2. Incorrect valve clearance<br>3. Leaks in intake and exhaust valves<br>4. Leaks in cylinders |
| Low | High | Rough idle<br>(Fluctuating HC reading) | 1. Vacuum leaks:<br>• PCV hoses<br>• Intake manifold<br>• Throttle body<br>• ISC valve<br>• Brake booster line<br>2. Lean mixture causing misfire |
| High | High | Rough idle<br>(Black smoke form exhaust) | 1. Restricted air filter<br>2. Plugged PCV valve<br>3. Faulty EFI systems:<br>• Faulty pressure regulator<br>• Defective water temperature sensor<br>• Defective mass air flow meter<br>• Faulty ECM<br>• Faulty injectors<br>• Faulty throttle position sensor |

cardiagn.com

# ENGINE REAR OIL SEAL (1AZ–FE)

141BI–01

## REPLACEMENT

1. **REMOVE MANUAL TRANSAXLE ASSY (M/T TRANSAXLE) (See page 41–24)**
2. **REMOVE AUTOMATIC TRANSAXLE ASSY (A/T TRANSAXLE) (See page 40–25)**
3. **REMOVE CLUTCH COVER ASSY (M/T TRANSAXLE) (See page 42–26)**
4. **REMOVE DRIVE PLATE AND RING GEAR OR FLYWHEEL (See page 14–121)**
   SST 09213–54015 (91651–60855), 09330–00021

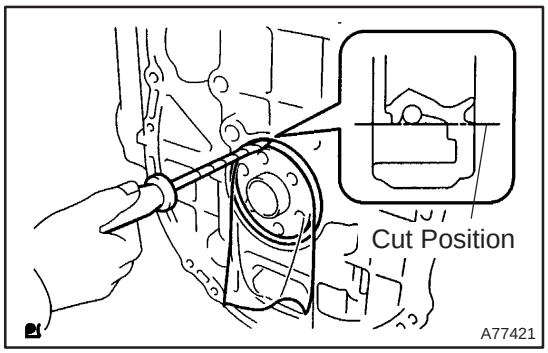


5. **REMOVE ENGINE REAR OIL SEAL**
   (a) Using a knife, cut off the engine rear oil seal lip.
   (b) Using a screwdriver with the tip wrapped in tape, pry out the engine rear oil seal.

HINT:
After the removal, check if the crankshaft is not damaged.
If is damaged, smooth the surface with 400–grit sandpaper.

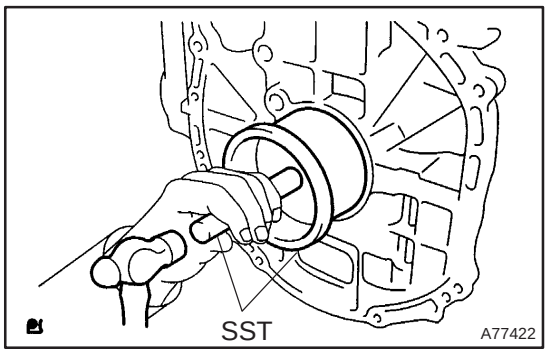


6. **INSTALL ENGINE REAR OIL SEAL**
   (a) Apply MP grease to a new engine rear oil seal lip.

**NOTICE:**
**Keep the lip off foreign materials.**

   (b) Using SST and a hammer, tap in the engine rear oil seal until its surface is flush with the engine rear oil seal retainer edge.
   SST 09223–15030, 09950–70010 (09951–07100)

**NOTICE:**
**Wipe off extra grease on the crankshaft.**

7. **INSTALL DRIVE PLATE AND RING GEAR OR FLYWHEEL (See page 14–121)**
   SST 09213–54015 (91651–60855), 09330–00021
8. **INSTALL CLUTCH COVER ASSY (M/T TRANSAXLE) (See page 42–26)**
9. **INSTALL MANUAL TRANSAXLE ASSY (M/T TRANSAXLE) (See page 41–24)**
10. **INSTALL AUTOMATIC TRANSAXLE ASSY (A/T TRANSAXLE) (See page 40–25)**

cardiagn.com

# ENGINE REAR OIL SEAL (1AZ–FSE)

141BS–01

## REPLACEMENT

1. **REMOVE MANUAL TRANSAXLE ASSY (M/T TRANSAXLE) (See page 41–24)**
2. **REMOVE AUTOMATIC TRANSAXLE ASSY (A/T TRANSAXLE) (See page 40–25)**
3. **REMOVE CLUTCH COVER ASSY (M/T TRANSAXLE) (See page 42–26)**
4. **REMOVE DRIVE PLATE AND RING GEAR OR FLYWHEEL (See page 14–204)**
   SST 09213–54015 (91651–60855), 09330–00021

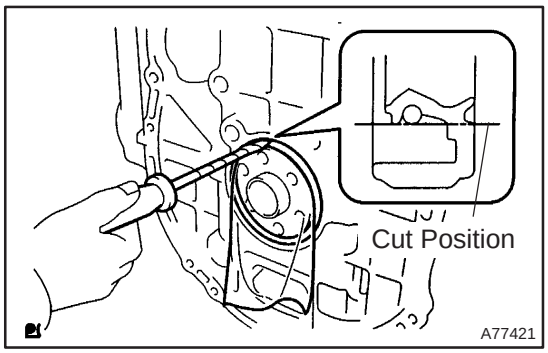


5. **REMOVE ENGINE REAR OIL SEAL**
   (a) Using a knife, cut off the engine rear oil seal lip.
   (b) Using a screwdriver with the tip wrapped in tape, pry out the engine rear oil seal.

HINT:
After the removal, check if the crankshaft is not damaged.
If is damaged, smooth the surface with 400–grit sandpaper.

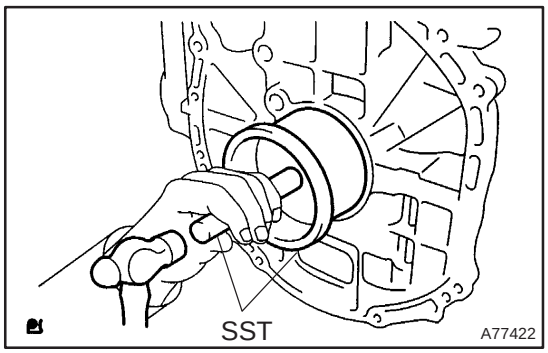


6. **INSTALL ENGINE REAR OIL SEAL**
   (a) Apply MP grease to a new engine rear oil seal lip.

**NOTICE:**
**Keep the lip off foreign materials.**

   (b) Using SST and a hammer, tap in the engine rear oil seal until its surface is flush with the engine rear oil seal retainer edge.
   SST 09223–15030, 09950–70010 (09951–07100)

**NOTICE:**
**Wipe off extra grease on the crankshaft.**

7. **INSTALL DRIVE PLATE AND RING GEAR OR FLYWHEEL (See page 14–204)**
   SST 09213–54015 (91651–60855), 09330–00021
8. **INSTALL CLUTCH COVER ASSY (M/T TRANSAXLE) (See page 42–26)**
9. **INSTALL MANUAL TRANSAXLE ASSY (M/T TRANSAXLE) (See page 41–24)**
10. **INSTALL AUTOMATIC TRANSAXLE ASSY (A/T TRANSAXLE) (See page 40–25)**

cardiagn.com

# ENGINE REAR OIL SEAL (1CD–FTV)

141CC–01

## REPLACEMENT

1. **REMOVE MANUAL TRANSAXLE ASSY (See page 41–33)**
   SST 09930–00010, 09628–62011, 09520–01010, 09520–24010 (09520–32040)
2. **REMOVE CLUTCH COVER ASSY (See page 42–26)**
3. **REMOVE CLUTCH DISC ASSY (See page 42–26)**

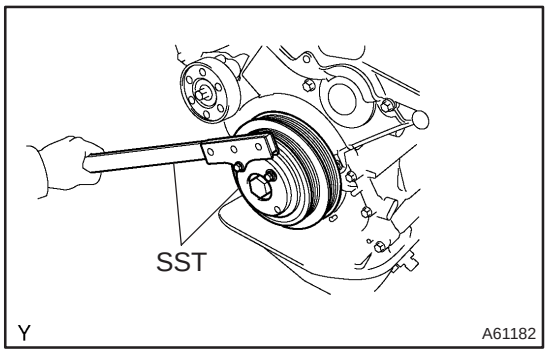


4. **REMOVE FLYWHEEL SUB–ASSY**
   (a) Hold the crankshaft with SST.
   SST 09213–54015 (90105–08076), 09330–00021
   (b) Using a torx socket wrench (T55), remove the 8 torx screws and the flywheel.

5. **REMOVE REAR END PLATE**
   (a) Remove the 2 bolts and the rear end plate.

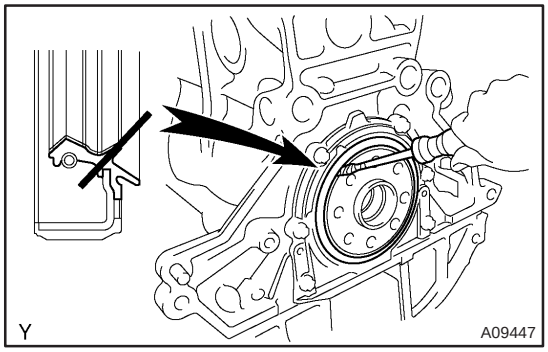


6. **REMOVE ENGINE REAR OIL SEAL**
   (a) Using a knife, cut off the oil seal lip.
   (b) Using a screwdriver, pry out the oil seal.

**NOTICE:**
**After the removal, check if the crankshaft is not damaged. If it is damaged, smooth the surface with 400–grit sandpaper.**

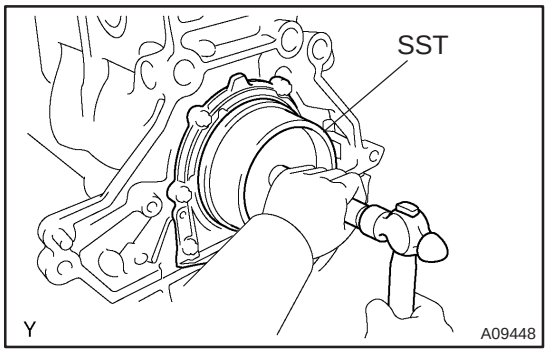


7. **INSTALL ENGINE REAR OIL SEAL**
   (a) Apply MP grease to a new oil seal lip.

**NOTICE:**
**Keep the lip free of foreign objects.**

   (b) Using SST and a hammer, tap in the oil seal until its surface is flush with the rear oil seal retainer edge.
   SST 09223–15030, 09950–70010 (09951–07100)

**NOTICE:**
**Wipe off extra grease on the crankshaft.**

8. **INSTALL REAR END PLATE**
   **Torque: 8.4 N·m (86 kgf·cm, 74 in.·lbf)**

cardiagn.com

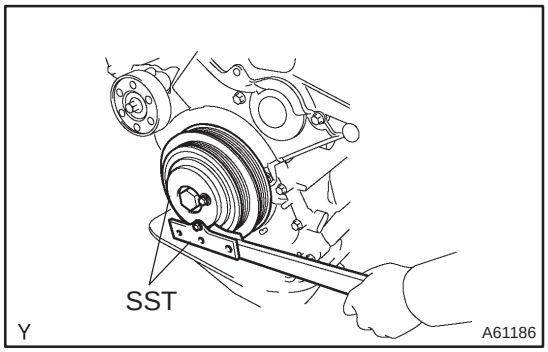


**9. INSTALL FLYWHEEL SUB–ASSY**

(a) Hold the crankshaft with SST.
SST 09213–54015 (90105–08076), 09330–00021

(b) Clean the bolt and the bolt hole.

(c) Apply Adhesive to the bolts.
**Adhesive:**
**Part No. 08833–00070, THREE BOND or equivalent**

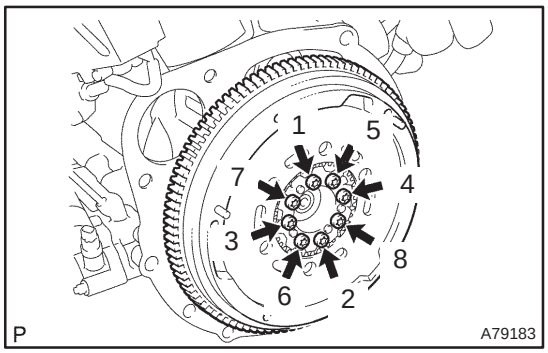


(d) Using several steps, install and tighten the 8 screws with a torx socket wrench (T55) uniformly in the sequence shown in the illustration.
**Torque: 71 N·m (720 kgf·cm, 52 ft·lbf)**

**10. INSTALL CLUTCH DISC ASSY (See page 42–26)**
SST 09301–00220

**11. INSTALL CLUTCH COVER ASSY (See page 42–26)**

**12. INSTALL MANUAL TRANSAXLE ASSY (See page 41–33)**
SST 09670–00010

cardiagn.com

# ENGINE REAR OIL SEAL (1ZZ–FE/3ZZ–FE)

141CO–01

## REPLACEMENT

1. **REMOVE MANUAL TRANSAXLE ASSY (M/T TRANSAXLE) (See page 41–15)**
2. **REMOVE AUTOMATIC TRANSAXLE ASSY (A/T TRANSAXLE) (See page 40–11)**
3. **REMOVE CLUTCH COVER ASSY (M/T TRANSAXLE) (See page 42–26)**
4. **REMOVE CLUTCH DISC ASSY (M/T TRANSAXLE) (See page 42–26)**

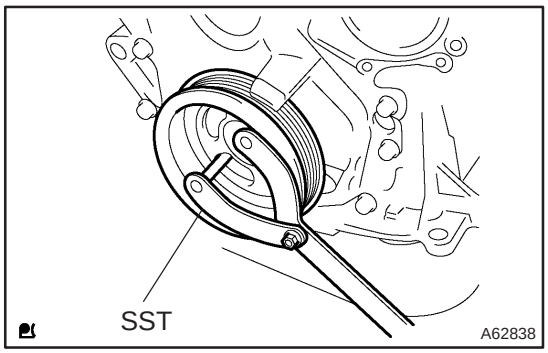


**5. REMOVE FLYWHEEL SUB–ASSY (M/T TRANSAXLE)**

(a) Hold the crankshaft with SST, remove the 8 bolts and the flywheel.
SST 09960–10010 (09962–01000, 09963–01000)

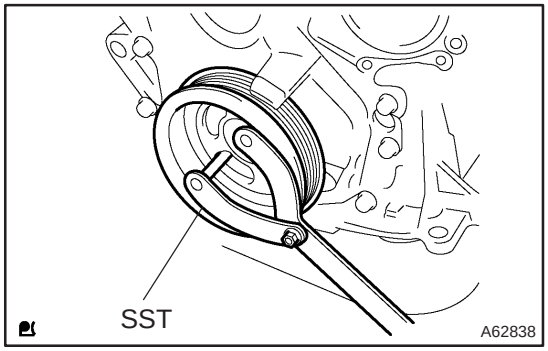


**6. REMOVE DRIVE PLATE & RING GEAR SUB–ASSY (A/T TRANSAXLE)**

(a) Hold the crankshaft with SST, remove the 8 bolts and the drive plate & ring gear.
SST 09960–10010 (09962–01000, 09963–01000)

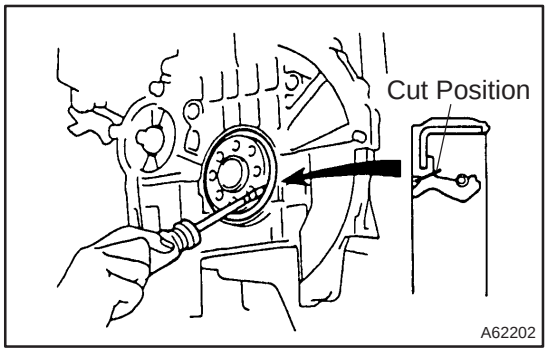


**7. REMOVE ENGINE REAR OIL SEAL**

(a) Using a knife, cut off the oil seal lip.
(b) Using a screwdriver with the tip wrapped in tape, pry out the oil seal.

**NOTICE:**
**After the removal, check if the crankshaft is not damaged. If it is damaged, smooth the surface with 400–grid sandpaper.**

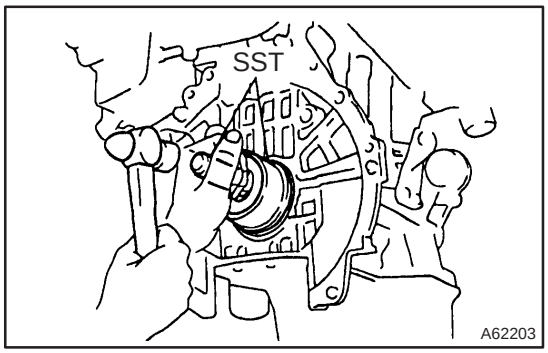


**8. INSTALL ENGINE REAR OIL SEAL**

(a) Apply MP grease to a new oil seal lip.

**NOTICE:**
**Keep the lip off foreign materials.**

(b) Using SST, tap in the oil seal until its surface is flush with the rear oil seal retainer edge.
SST 09223–15020, 09950–70010 (09951–07100)

**NOTICE:**
**Wipe off extra grease on the crankshaft.**

cardiagn.com

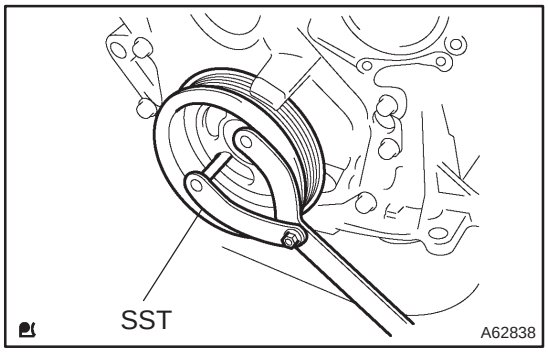


**9. INSTALL FLYWHEEL SUB–ASSY (M/T TRANSAXLE)**

(a) Fix the crankshaft with SST.
SST 09960–10010 (09962–01000, 09963–01000)

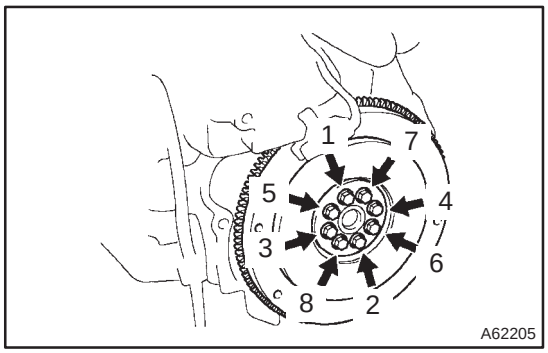


(b) Clean the bolt and bolt hole.
(c) Apply adhesive to the bolts.
**Adhesive:**
**Part No. 09330–00070, THREE BOND or equivalent.**
(d) Using several steps, Install and tighten the 8 bolts uniformly in the sequence shown in the illustration.
**Torque: 49 N·m (500 kgf·cm, 36 ft·lbf)**

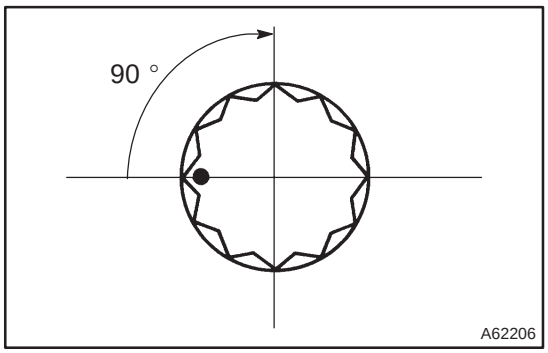


(e) Mark the bolts with paint as shown in the illustration.
(f) Retighten the bolts by an additional 90° in the same sequence as step (d).
(g) Check that the paint marks of each bolt are at 90° angle from the original position.

**10. INSTALL CLUTCH DISC ASSY (M/T TRANSAXLE) (See page 42–26)**

**11. INSTALL CLUTCH COVER ASSY (M/T TRANSAXLE) (See page 42–26)**

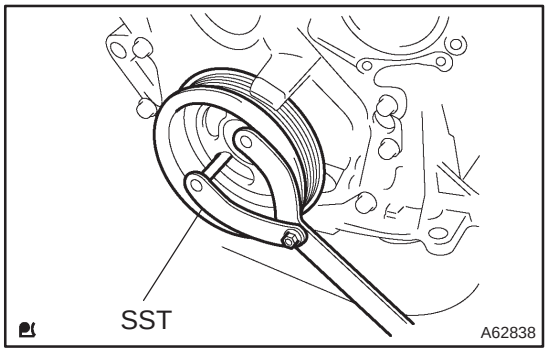


**12. INSTALL DRIVE PLATE & RING GEAR SUB–ASSY (A/T TRANSAXLE)**

(a) Fix the crankshaft with SST.
SST 09960–10010 (09962–01000, 09963–01000)

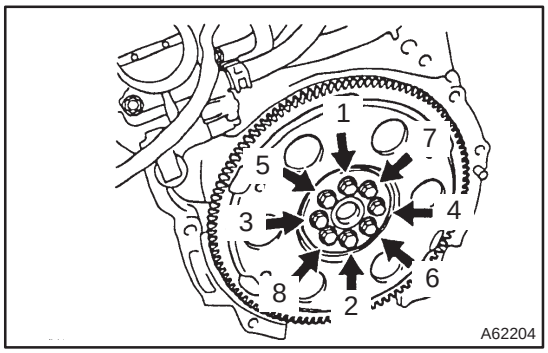


(b) Clean the bolt and bolt hole.
(c) Apply adhesive to the bolts.
**Adhesive:**
**Part No. 09330–00070, THREE BOND or equivalent.**
(d) Using several steps, install and tighten the 8 bolts uniformly in the sequence shown in the illustration.
(e) Fix the crankshaft with SST.
**Torque: 88 N·m (897 kgf·cm, 65 ft·lbf)**

cardiagn.com

**13. INSTALL MANUAL TRANSAXLE ASSY (M/T TRANSAXLE) (See page 41–15)**

**14. INSTALL AUTOMATIC TRANSAXLE ASSY (A/T TRANSAXLE) (See page 40–11)**

cardiagn.com

# FAN AND GENERATOR V BELT (1AZ–FE)

141B5–01

## REPLACEMENT

**1. REMOVE RADIATOR SUPPORT OPENING COVER**

**2. REMOVE ENGINE ROOM COVER SIDE**

**3. REMOVE ENGINE UNDER COVER RH**

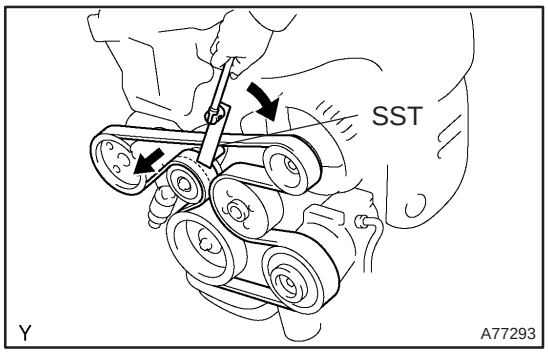


**4. REMOVE FAN AND GENERATOR V BELT**

(a) Using SST, loosen the V–ribbed belt tensioner arm clockwise, and remove the fan and generator V belt.
SST 09249–63010

**5. INSTALL FAN AND GENERATOR V BELT**

(a) Using SST, loosen the V–ribbed belt tensioner arm clockwise, and install the fan and generator V belt.
SST 09249–63010

cardiagn.com

# FAN AND GENERATOR V BELT (1AZ–FSE)

141BJ–01

## REPLACEMENT

**1. REMOVE RADIATOR SUPPORT OPENING COVER**

**2. REMOVE ENGINE ROOM COVER SIDE**

**3. REMOVE ENGINE UNDER COVER RH**

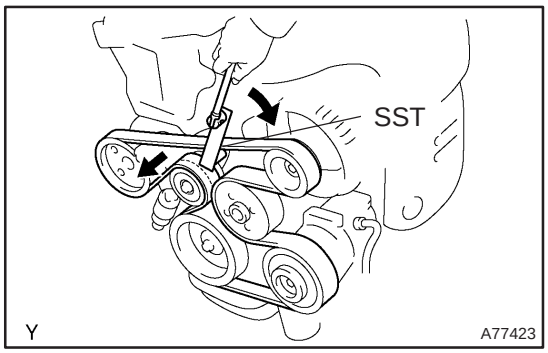


**4. REMOVE FAN AND GENERATOR V BELT**

(a) Using SST, loosen the V–ribbed belt tensioner arm clockwise, and remove the fan and generator V belt.
SST 09249–63010

**5. INSTALL FAN AND GENERATOR V BELT**

(a) Using SST, loosen the V–ribbed belt tensioner arm clockwise, and install the fan and generator V belt.
SST 09249–63010

cardiagn.com

# FAN AND GENERATOR V BELT (1ZZ–FE/3ZZ–FE)

141CD–01

## REPLACEMENT

1. **REMOVE RADIATOR SUPPORT OPENING COVER (See page 14–27)**
2. **REMOVE ENGINE ROOM COVER SIDE (See page 14–27)**
3. **REMOVE ENGINE UNDER COVER SUB–ASSY NO.1 (See page 14–27)**

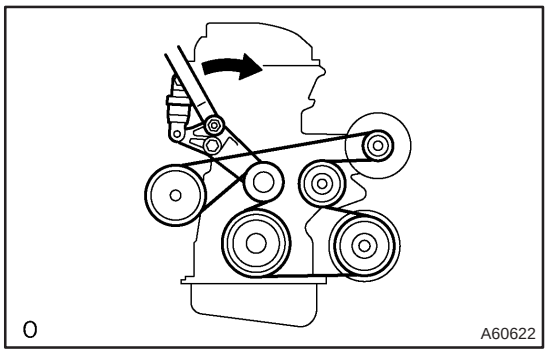


**4. REMOVE FAN AND GENERATOR V BELT**

(a) Turn the V–ribbed belt tensioner clockwise slowly and loosen it. Then, remove the fan and generator V belt and put back the V–ribbed belt tensioner carefully.

cardiagn.com

# PARTIAL ENGINE ASSY (1AZ–FE)

141B9–01

## COMPONENTSCOMPONENTS

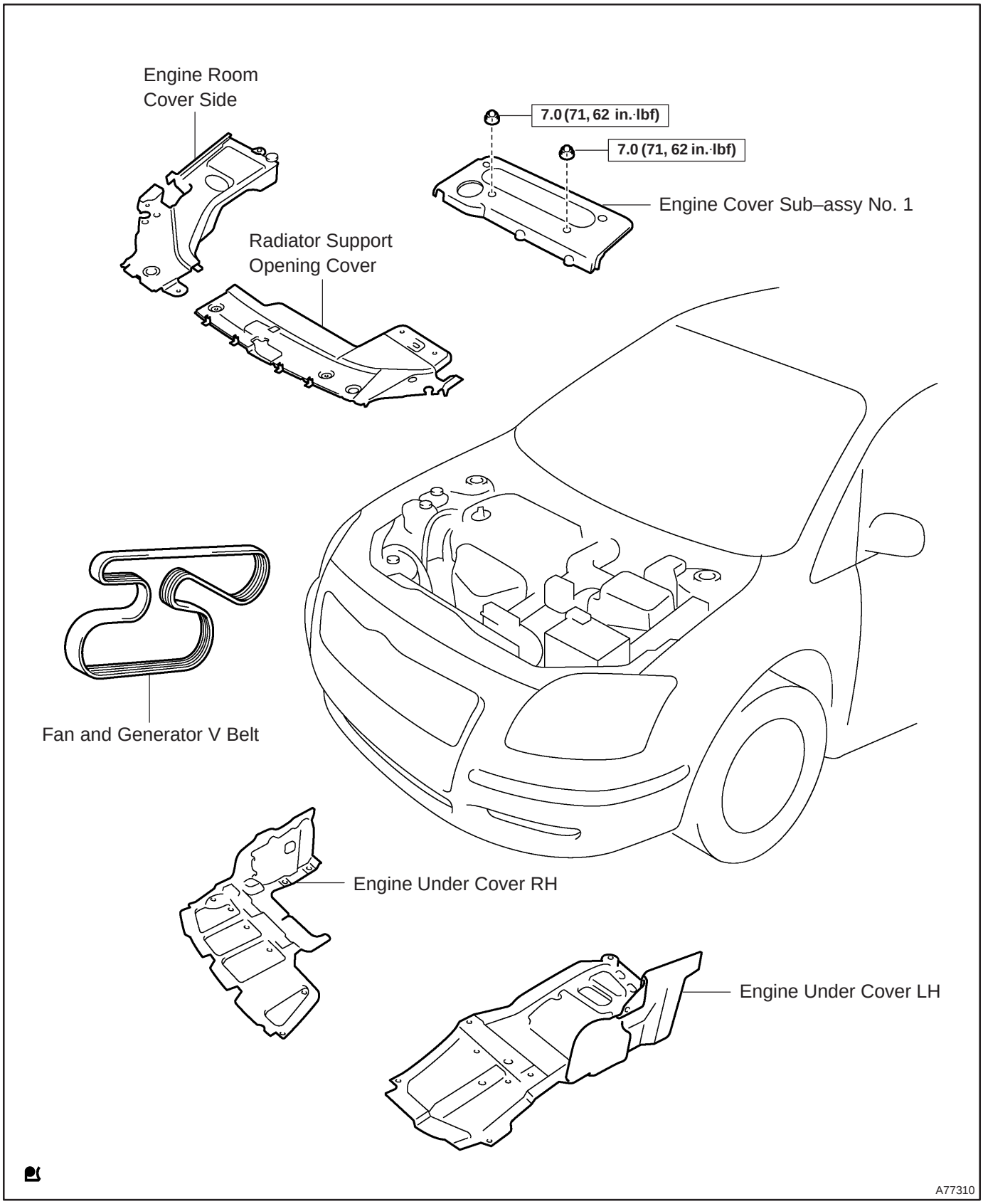


cardiagn.com

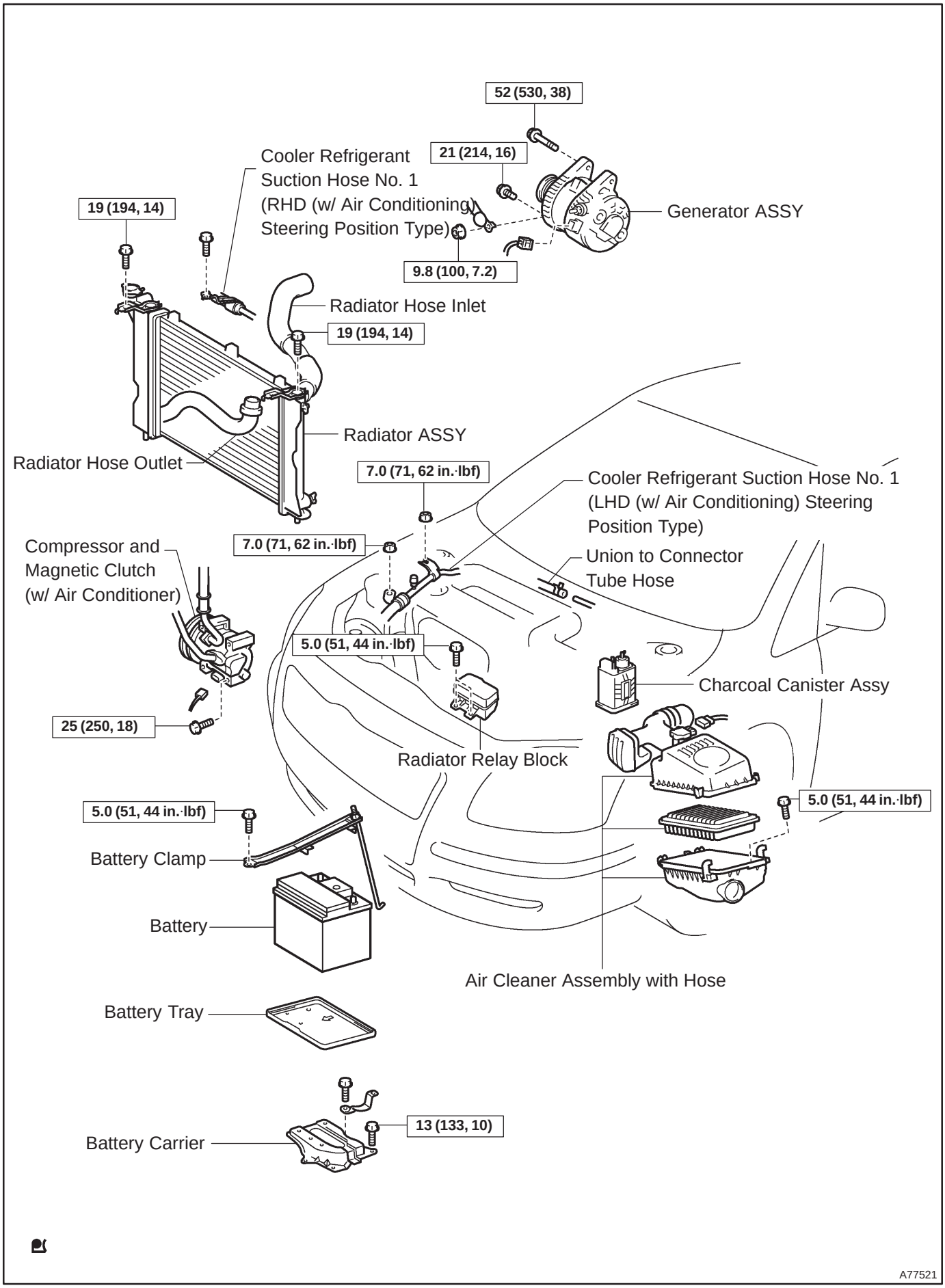


cardiagn.com

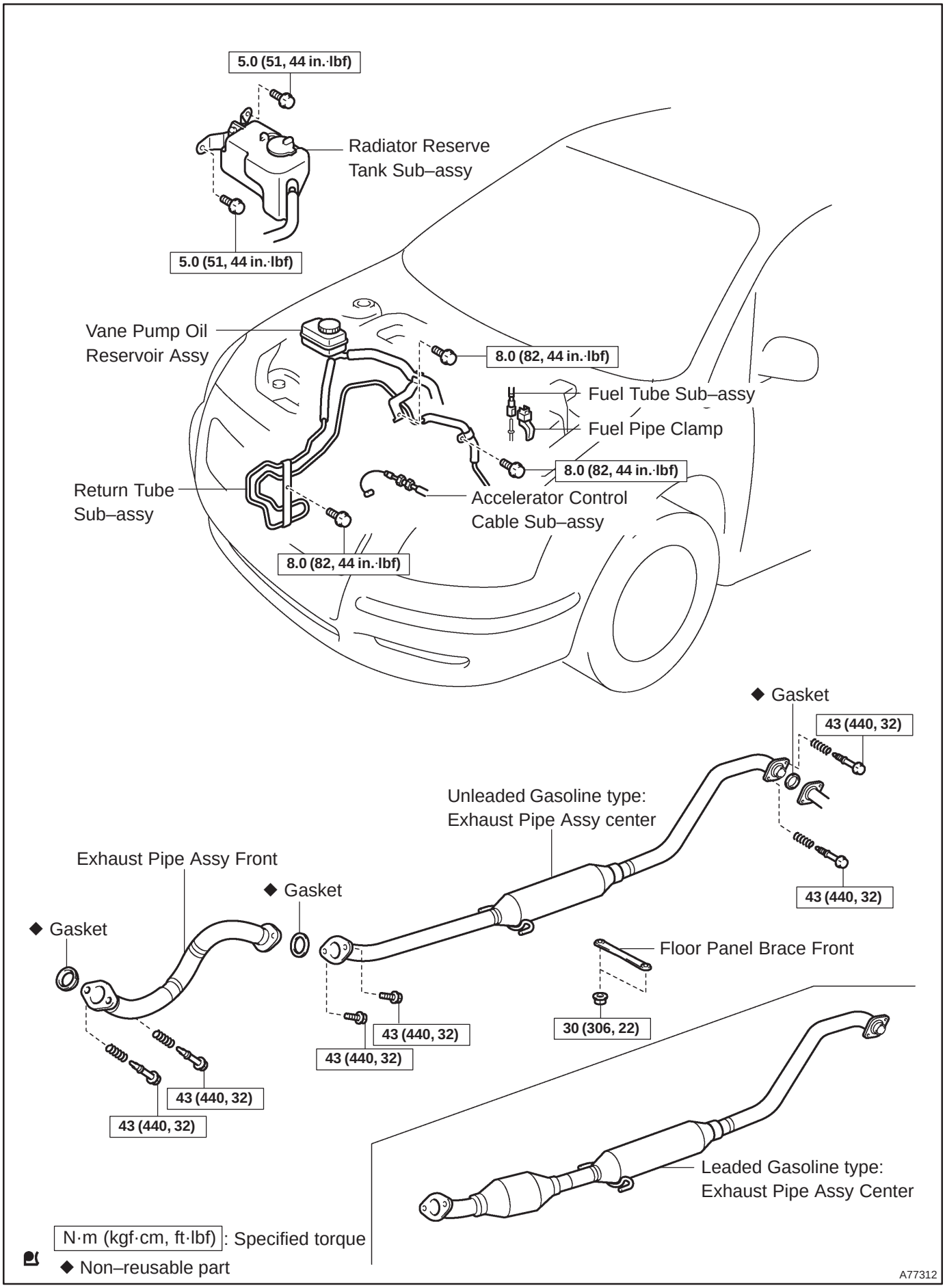


cardiagn.com

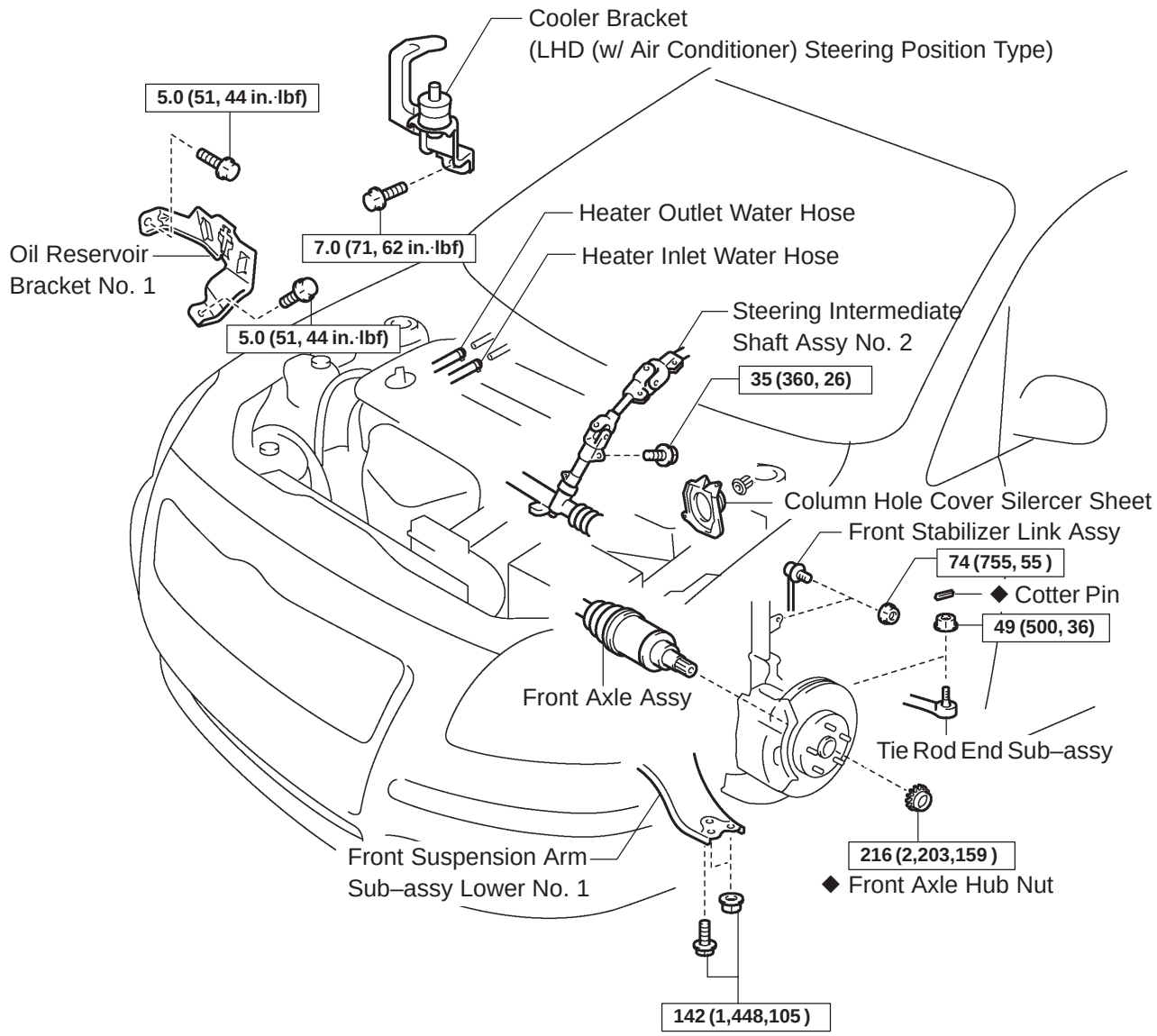


N·m (kgf·cm, ft·lbf) : Specified torque

◆ Non–reusable part

A77313

cardiagn.com

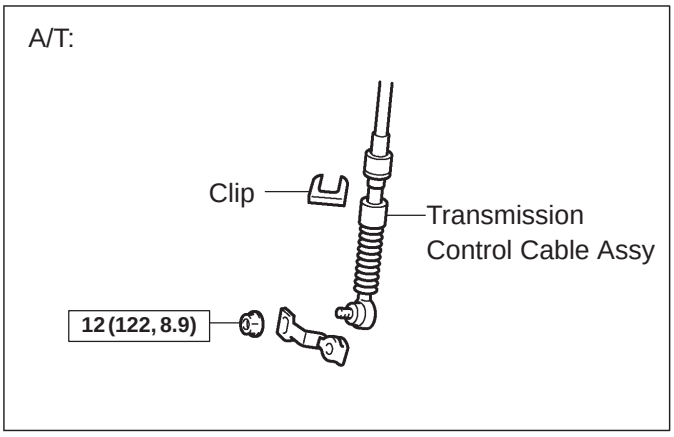


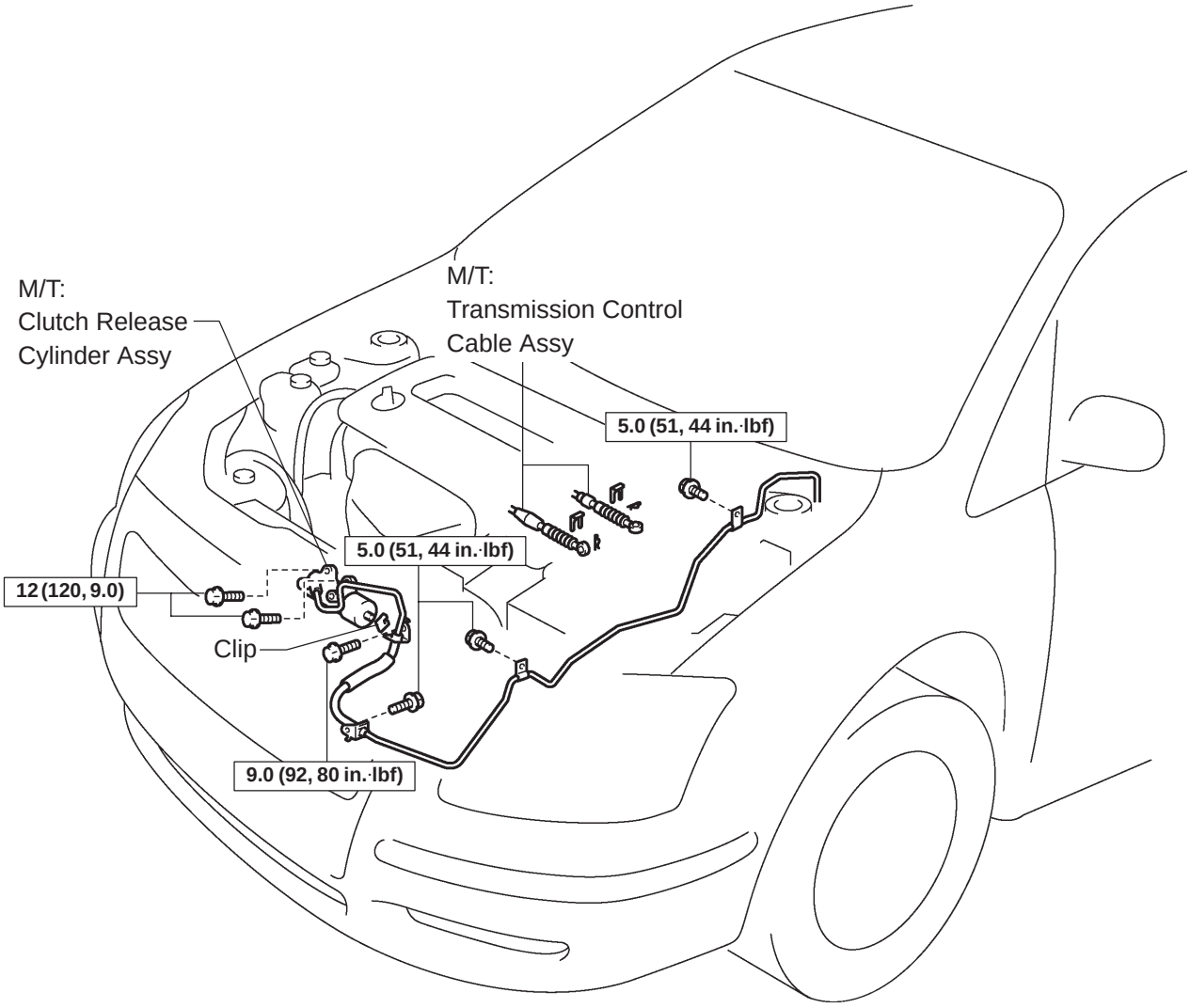


N·m (kgf·cm, ft·lbf): Specified torque

A77314

cardiagn.com

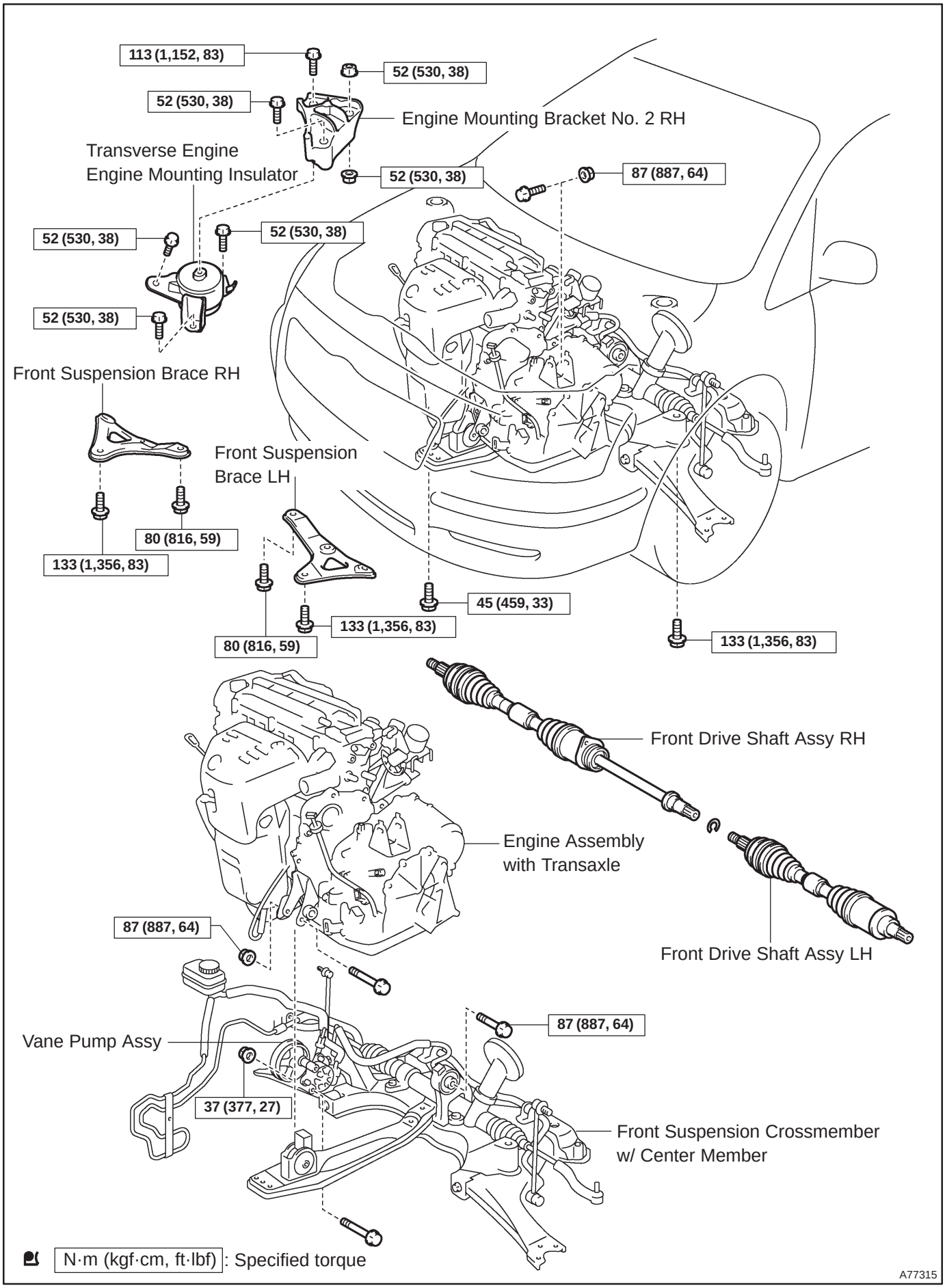


cardiagn.com

M/T:

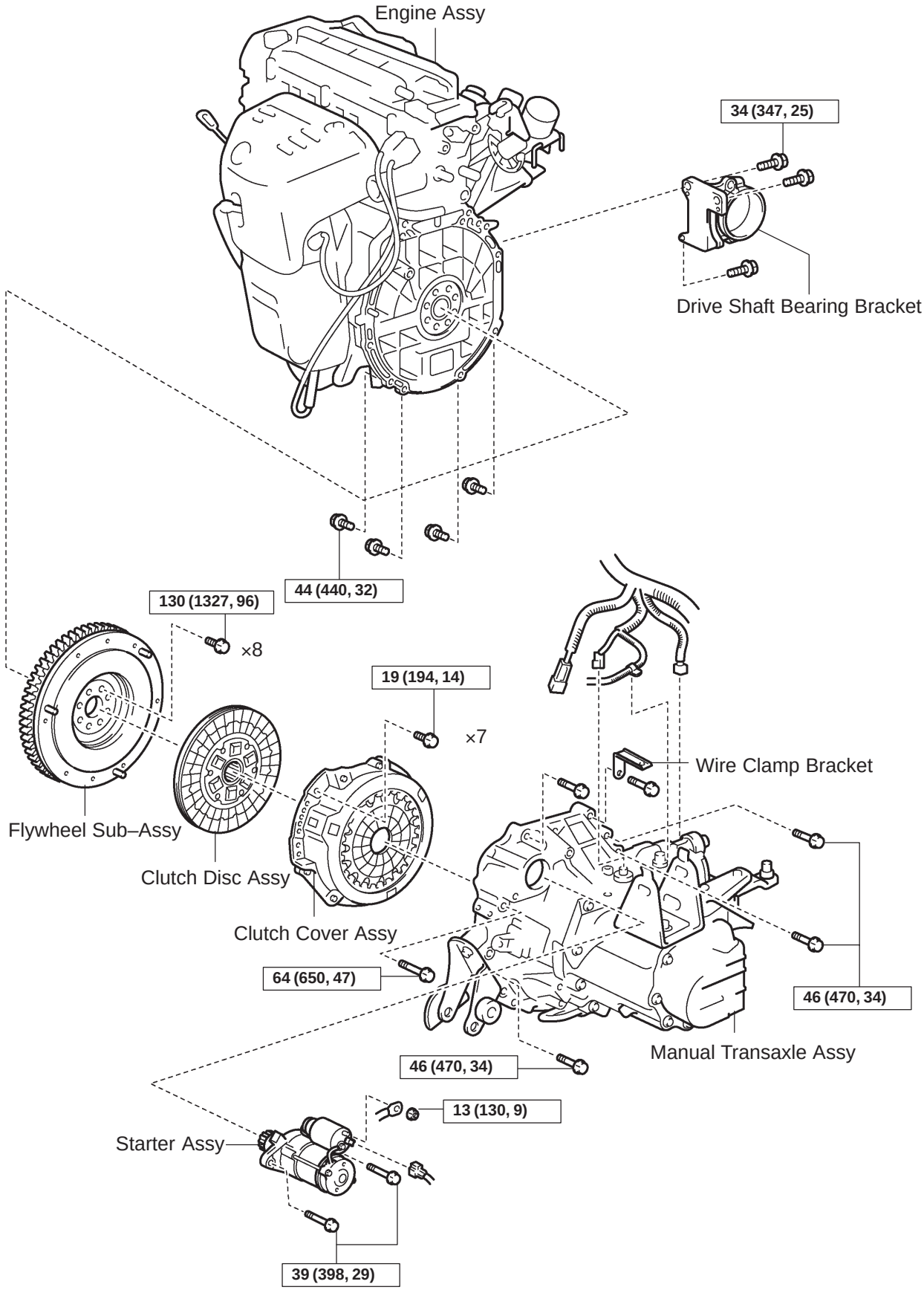


N·m (kgf·cm, ft·lbf): Specified torque

A77497

cardiagn.com

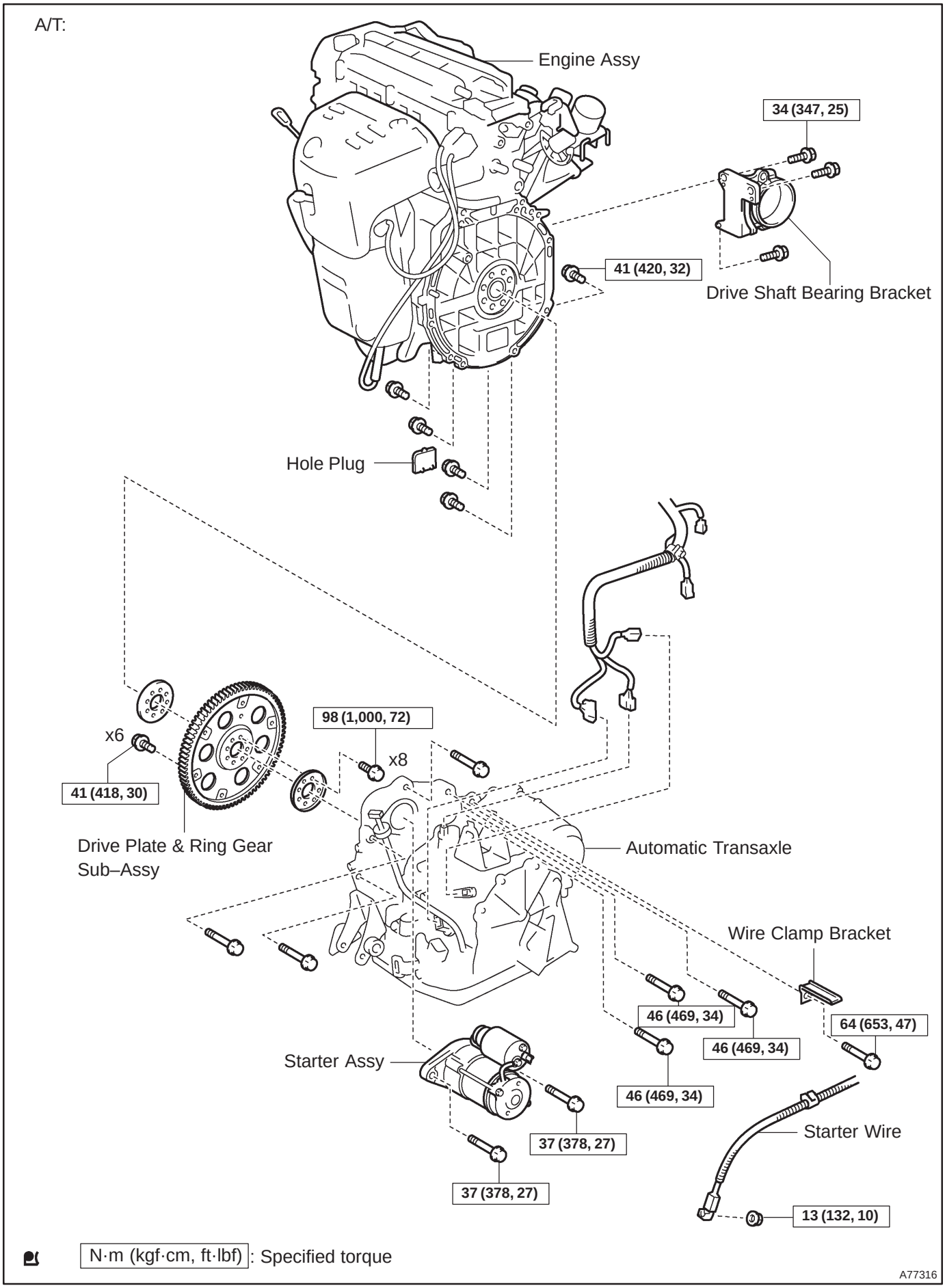


cardiagn.com

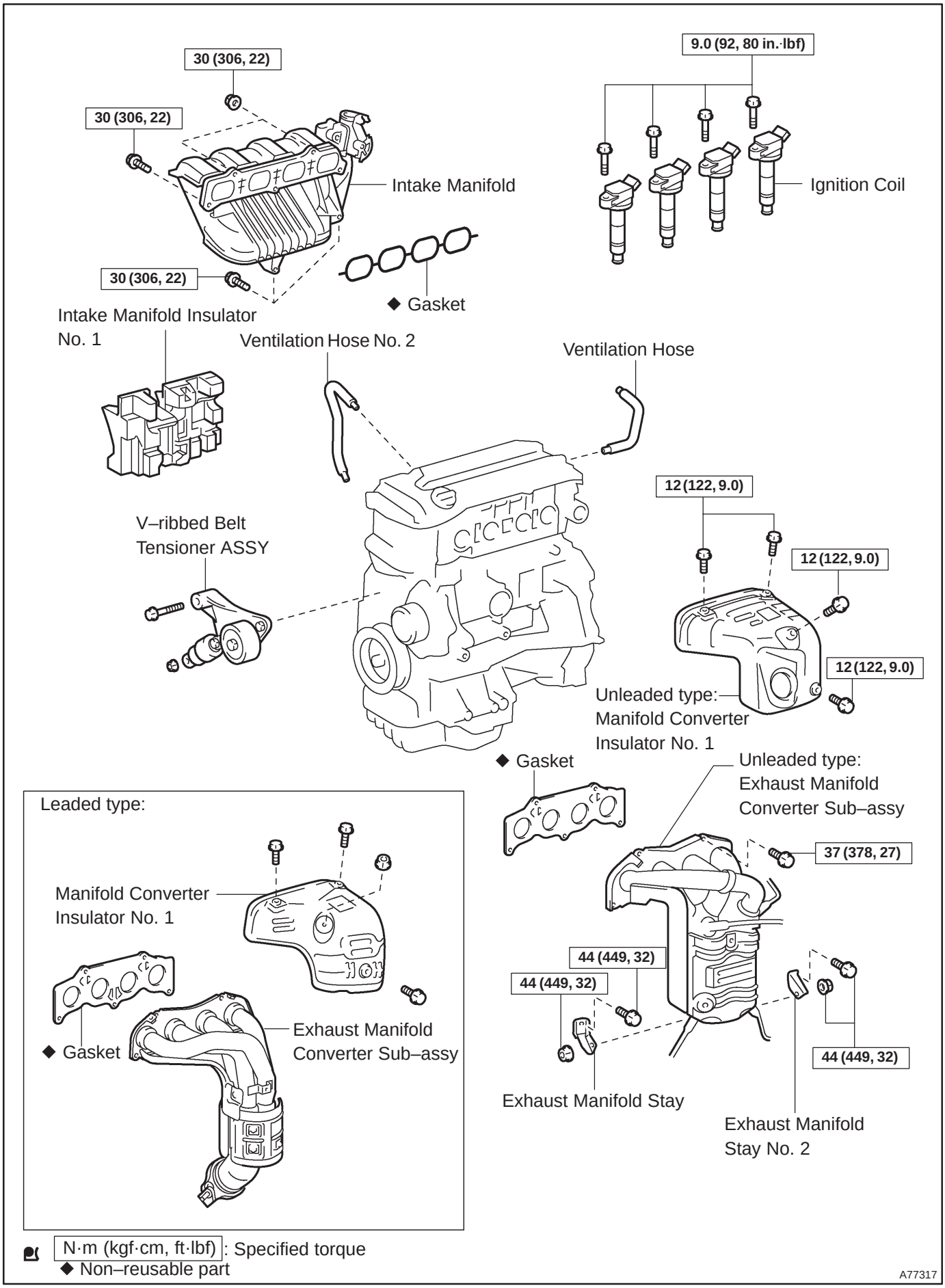


cardiagn.com

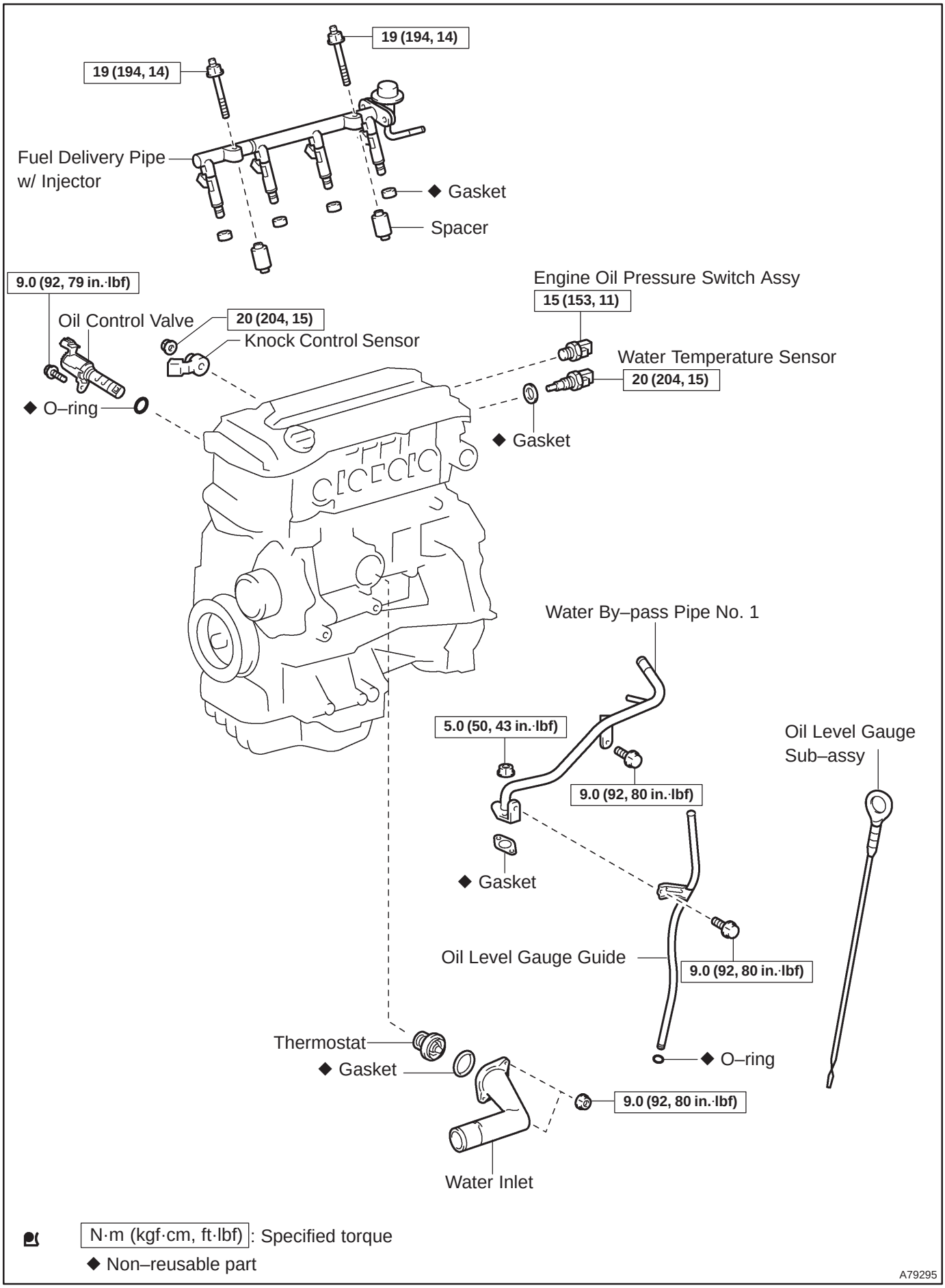


cardiagn.com

141BF–01

# REPLACEMENT

1. **DISCHARGE FUEL SYSTEM PRESSURE (See page 11–19)**
2. **REMOVE FRONT WHEELS**
3. **REMOVE RADIATOR SUPPORT OPENING COVER**
4. **REMOVE ENGINE ROOM COVER SIDE**
5. **REMOVE ENGINE UNDER COVER RH**
6. **REMOVE ENGINE UNDER COVER LH**
7. **DRAIN COOLANT (See page 16–19)**
8. **DRAIN ENGINE OIL**

(a) Install a new gasket and the drain plug after draining engine oil.
**Torque: 25 N·m (255 kgf·cm, 18 ft·lbf)**

9. **DRAIN MANUAL TRANSAXLE OIL (M/T TRANSAXLE)**
**Torque: 49 N·m (500 kgf·cm, 36 ft·lbf)**
10. **DRAIN AUTOMATIC TRANSAXLE FLUID (A/T TRANSAXLE) (See page 40–2)**

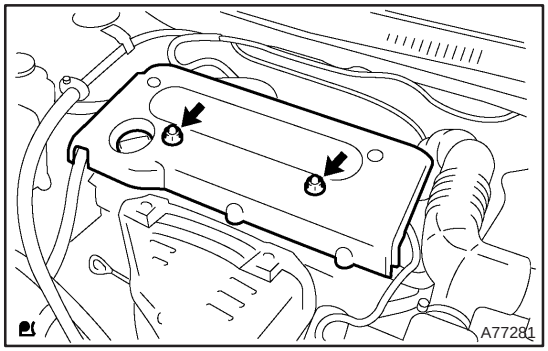


11. **REMOVE ENGINE COVER SUB–ASSY NO.1**

(a) Remove 2 nuts and the cylinder head cover No. 1.

12. **DISCONNECT RADIATOR HOSE INLET**
13. **DISCONNECT RADIATOR HOSE OUTLET**

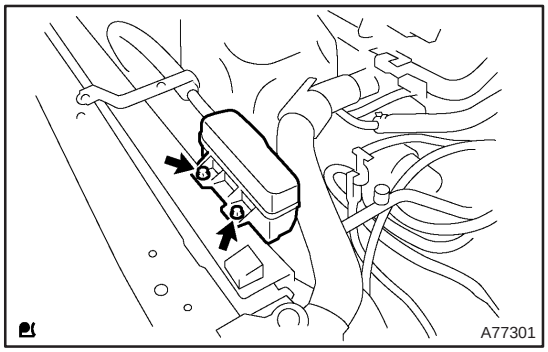


14. **SEPARATE RADIATOR RELAY BLOCK**

(a) Remove 2 bolts and separate the radiator relay block.

15. **SEPARATE COOLER REFRIGERANT SUCTION HOSE NO.1 (RHD(W/ AIR CONDITIONER) STEERING POSITION TYPE)**

(a) Remove a bolt and separate the suction hose No. 1.

16. **REMOVE RADIATOR ASSY (See page 16–24)**
17. **REMOVE FAN AND GENERATOR V BELT (See page 14–105)**
18. **REMOVE GENERATOR ASSY (See page 19–20)**
19. **REMOVE COMPRESSOR AND MAGNETIC CLUTCH (W/ AIR CONDITIONING)**

(a) Remove 4 bolts and separate the compressor and magnetic clutch.

HINT:

Secure the hoses off to the side instead of detaching.



cardiagn.com

**20. REMOVE BATTERY**

**21. REMOVE AIR CLEANER ASSEMBLY WITH HOSE**

(a) Disconnect 2 connectors.

(b) Disconnect the air cleaner hose from the throttle body.

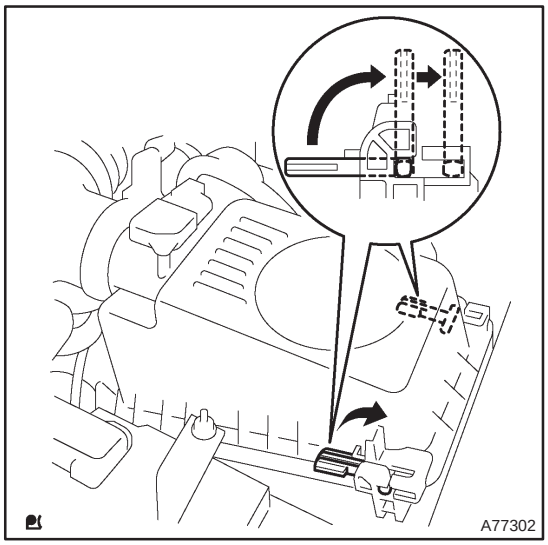


(c) Raise a clamp up, and slide it toward the air cleaner cap, then remove the air cleaner cap from its case.

(d) Remove the air cleaner element.

(e) Remove 4 bolts and the air cleaner case.

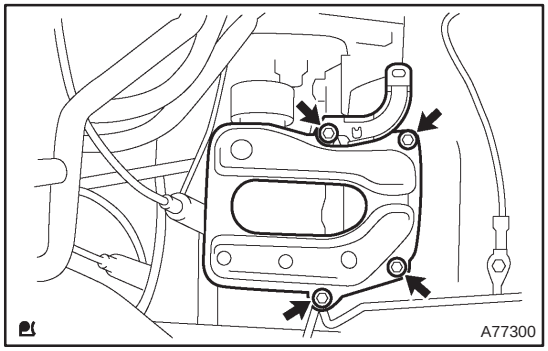


**22. REMOVE BATTERY CARRIER**

(a) Remove 4 bolts and the battery carrier.

**23. REMOVE RADIATOR RESERVE TANK SUB–ASSY**

(a) Remove 2 bolts and the radiator reserve tank.

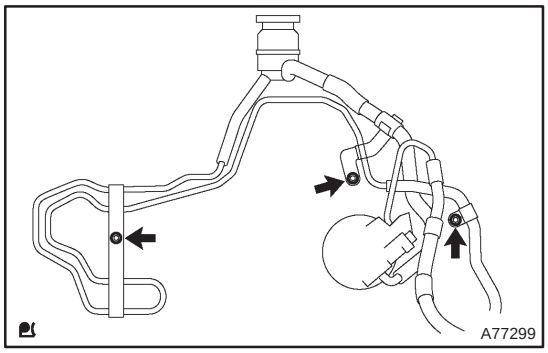


**24. SEPARATE RETURN TUBE SUB–ASSY**

(a) Remove 3 bolts as shown in the illustration.

**25. SEPARATE VANE PUMP OIL RESERVOIR ASSY**

cardiagn.com

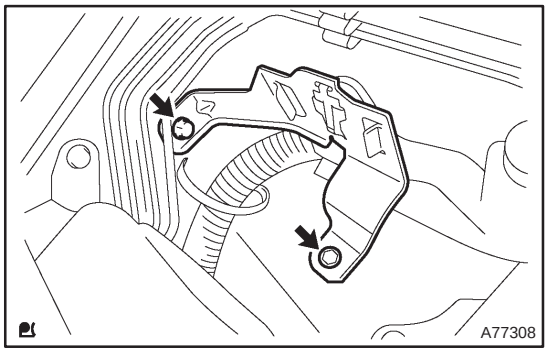


**26. REMOVE OIL RESERVOIR BRACKET NO.1**

(a) Remove 2 bolts and the oil reservoir bracket No. 1.

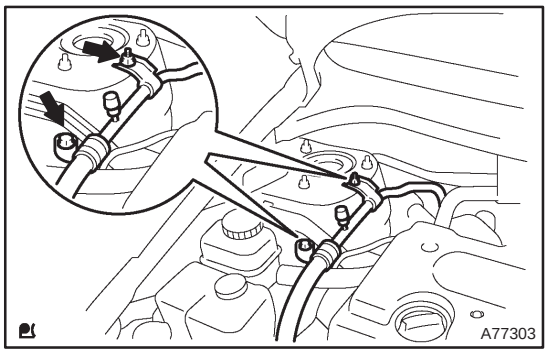


**27. SEPARATE COOLER REFRIGERANT SUCTION HOSE NO.1 (LHD(W/ AIR CONDITIONER) STEERING POSITION TYPE)**

(a) Remove 2 nuts and separate the suction hose.

**28. REMOVE ENGINE SERVICE COVER BRACKET RH (W/O AIR CONDITIONING)**

(a) Remove a bolt and the service cover bracket RH.

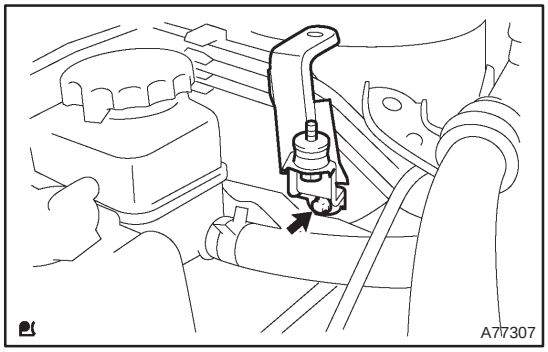


**29. REMOVE COOLER BRACKET (LHD(W/ AIR CONDITIONER) STEERING POSITION TYPE)**

(a) Remove the 2 nuts and separate the cooler bracket.

**30. REMOVE ENGINE SERVICE COVER BRACKET RH (RHD(W/ AIR CONDITIONER) STEERING POSITION TYPE)**

(a) Remove the bolt and the service cover bracket RH.

**31. DISCONNECT HEATER INLET WATER HOSE (W/ AIR CONDITIONING)**

**32. DISCONNECT HEATER OUTLET WATER HOSE (W/ AIR CONDITIONING)**

**33. REMOVE CHARCOAL CANISTER ASSY**

**34. DISCONNECT FUEL TUBE SUB–ASSY (See page 11–15)**

**35. DISCONNECT UNION TO CONNECTOR TUBE HOSE**

**36. REMOVE FLOOR PANEL BRACE FRONT (See page 15–7)**

**37. REMOVE EXHAUST PIPE ASSY CENTER (See page 15–7)**

**38. REMOVE EXHAUST PIPE ASSY FRONT (See page 15–7)**

**39. REMOVE FRONT AXLE HUB LH NUT (See page 30–6)**

SST 09330–00030

cardiagn.com

**40. REMOVE FRONT AXLE HUB RH NUT**

SST 09330–00030

HINT:

Perform the same procedure as above on the opposite side.

**41. SEPARATE TIE ROD END SUB–ASSY LH (See page 51–36)**

**42. SEPARATE TIE ROD END SUB–ASSY RH**

HINT:

Perform the same procedure as above on the opposite side.

**43. SEPARATE FRONT STABILIZER LINK ASSY LH (See page 26–26)**

**44. SEPARATE FRONT STABILIZER LINK ASSY RH**

HINT:

Perform the same procedure as above on the opposite side.

**45. SEPARATE FRONT SUSPENSION ARM SUB–ASSY LOWER NO.1 LH (M/T TRANSAXLE) (See page 26–21)**

**46. SEPARATE FRONT SUSPENSION ARM SUB–ASSY LOWER NO.1 LH (A/T TRANSAXLE) (See page 26–16)**

**47. SEPARATE FRONT SUSPENSION ARM SUB–ASSY LOWER NO.1 RH (M/T TRANSAXLE)**

HINT:

Perform the same procedure as above on the opposite side.

**48. SEPARATE FRONT SUSPENSION ARM SUB–ASSY LOWER NO.1 RH (A/T TRANSAXLE)**

HINT:

Perform the same procedure as above on the opposite side.

**49. SEPARATE FRONT AXLE ASSY LH (See page 30–6)**

**50. SEPARATE FRONT AXLE ASSY RH (See page 30–6)**

HINT:

Perform the same procedure as above on the opposite side.

**51. SEPARATE CLUTCH RELEASE CYLINDER ASSY (M/T TRANSAXLE)**

(a) Remove 7 bolts as shown in the illustration.

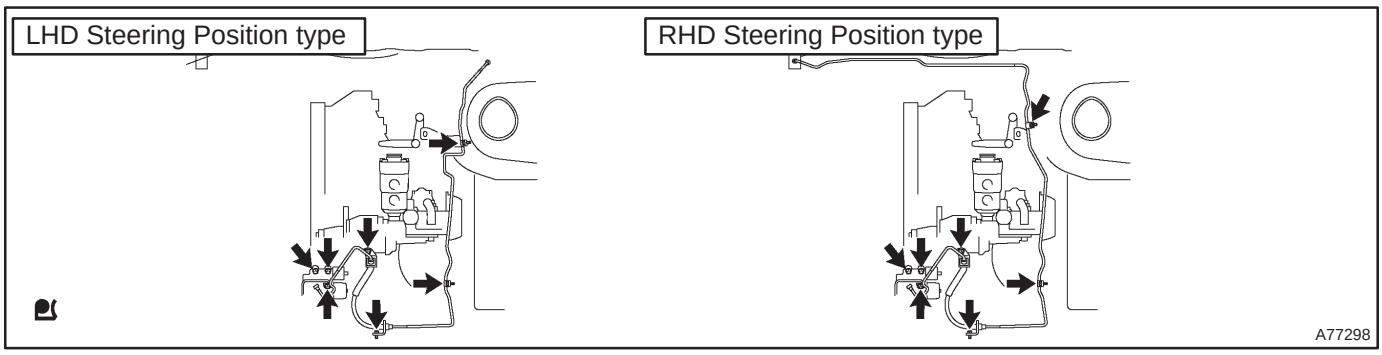


**52. SEPARATE TRANSMISSION CONTROL CABLE ASSY (M/T TRANSAXLE) (See page 41–24)**

**53. SEPARATE TRANSMISSION CONTROL CABLE ASSY (A/T TRANSAXLE) (See page 40–25)**

**54. SEPARATE ACCELERATOR CONTROL CABLE ASSY**

cardiagn.com

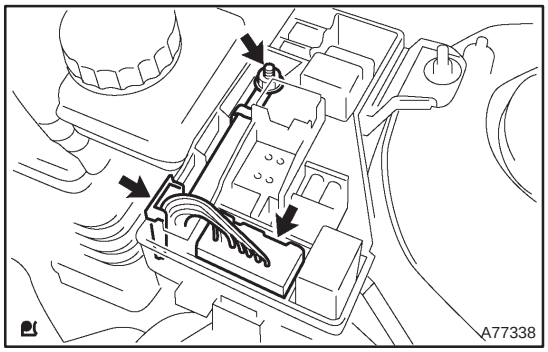


**55. SEPARATE ENGINE ROOM RELAY BLOCK NO.2**

(a) Remove the nut and disconnect the connector as shown in the illustration.

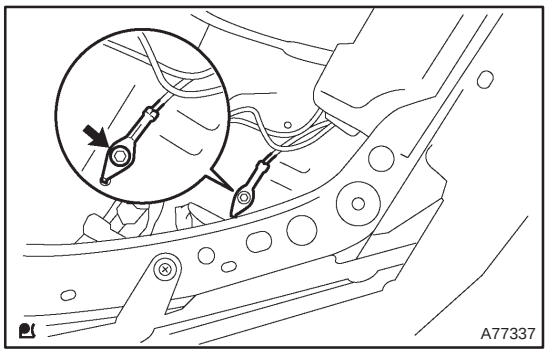


**56. SEPARATE ENGINE WIRE**

(a) Remove the bolt and separate the grand terminal.

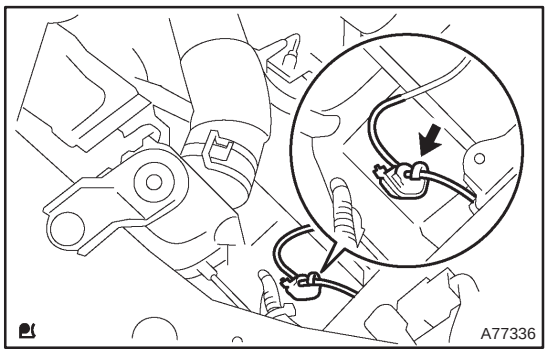


(b) Separate the grand terminal connector.

(c) Remove the glove compartment door panel.

(d) Separate the engine wire.

**57. SEPARATE STEERING INTERMEDIATE SHAFT ASSY NO.2 (See page 50–9)**

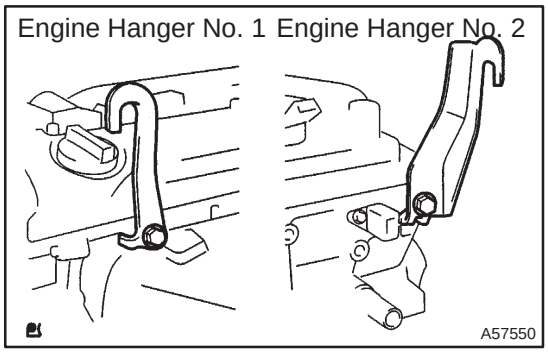


**58. INSTALL ENGINE HANGERS**

(a) Install the engine hanger No. 1 (12281–28010, 28020, 28030) with the bolt (91512–61020).
**Torque: 38 N·m (387 kgf·cm, 28 ft·lbf)**

(b) Install the engine hanger No. 2 (12282–28010, 28020, 28030) with the bolt (91512–61020).
**Torque: 38 N·m (387 kgf·cm, 28 ft·lbf)**

cardiagn.com

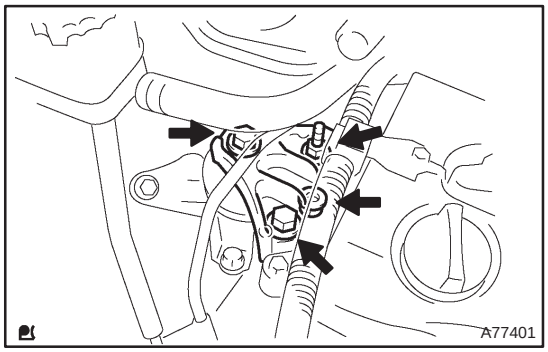


**59. REMOVE ENGINE MOUNTING BRACKET NO.2 RH**

(a) Set the engine lifter.

(b) Remove 2 bolts and 2 nuts, and then remove the mounting bracket No. 2.

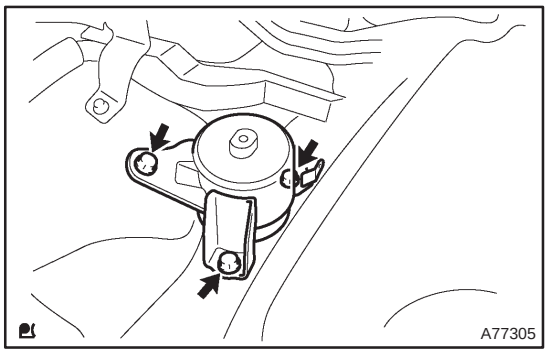


**60. REMOVE TRANSVERSE ENGINE ENGINE MOUNTING INSULATOR**

(a) Remove 3 bolts and the engine mounting insulator.

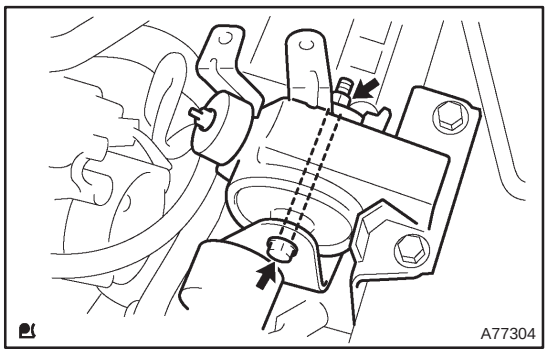


**61. REMOVE TRANSVERSE ENGINE ENGINE MOUNTING INSULATOR**

(a) Remove the through bolt and nut, and then detach the engine mounting insulator.

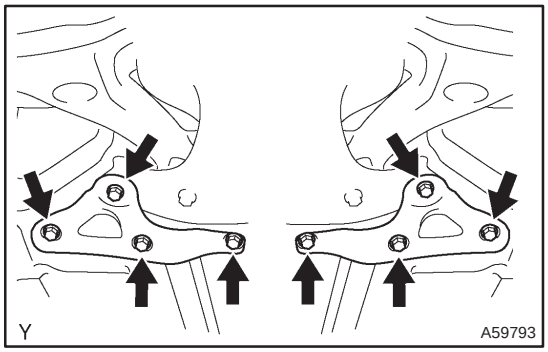


**62. REMOVE ENGINE ASSEMBLY WITH TRANSAXLE**

(a) Remove the8 bolts and the front suspension member braces.

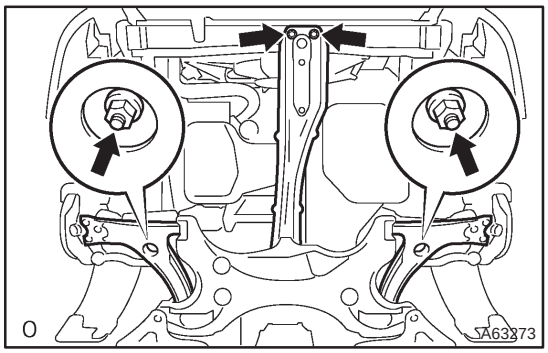


(b) Remove the 2 bolts and 2 nuts shown in the illustration.

(c) Carefully remove the engine assembly with transaxle from the vehicle.

cardiagn.com

**63. SEPARATE VANE PUMP ASSY**

(a) Disconnect the PS oil pressure switch connector.

(b) Remove the 2 bolts and separate the vane pump from the engine.

**64. REMOVE STARTER ASSY (See page 19–12)**

**65. REMOVE FRONT SUSPENSION CROSSMEMBER W/CENTER MEMBER**

(a) Remove the through bolt and nut from the engine mounting insulator FR.

(b) Remove the through bolt and nut from the engine mounting insulator RR.

**66. REMOVE FRONT DRIVE SHAFT ASSY LH (See page 30–6)**

**67. REMOVE FRONT DRIVE SHAFT ASSY RH (See page 30–6)**

**68. REMOVE MANUAL TRANSAXLE ASSY (M/T TRANSAXLE) (See page 41–24)**

**69. REMOVE AUTOMATIC TRANSAXLE ASSY (A/T TRANSAXLE) (See page 40–25)**

**70. REMOVE CLUTCH COVER ASSY (M/T TRANSAXLE) (See page 42–26)**

**71. REMOVE CLUTCH DISC ASSY (M/T TRANSAXLE) (See page 42–26)**

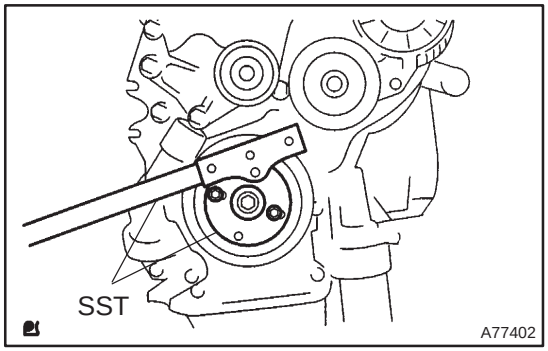


**72. REMOVE DRIVE PLATE AND RING GEAR OR FLYWHEEL**

(a) Using SST, fix the crankshaft pulley and remove the drive plate and ring gear or flywheel.
SST 09213–54015 (91651–60855), 09330–00021

**73. REMOVE CAMSHAFT TIMING OIL CONTROL VALVE ASSY (W/ VVT–i)**

(a) Remove a bolt, O–ring and the camshaft timing oil control valve.

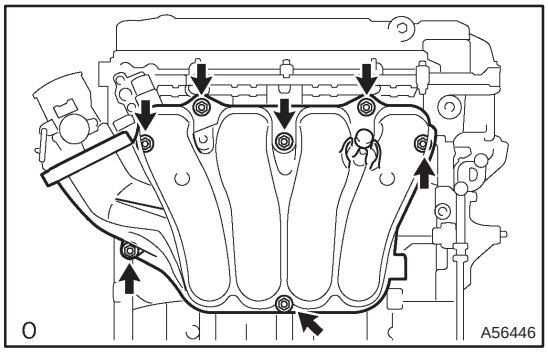


**74. REMOVE INTAKE MANIFOLD**

(a) Remove the 5 bolts and 2 nuts, and then remove the intake manifold.

**75. REMOVE VENTILATION HOSE**

**76. REMOVE VENTILATION HOSE NO.2**

**77. REMOVE ENGINE WIRE**

**78. REMOVE INTAKE MANIFOLD INSULATOR NO.1**

**79. REMOVE OIL LEVEL GAGE SUB–ASSY**

**80. REMOVE OIL LEVEL GAGE GUIDE**

**81. REMOVE MANIFOLD CONVERTER INSULATOR NO.1**

(a) Remove the 4 bolts and the manifold converter insulator No. 1.

cardiagn.com

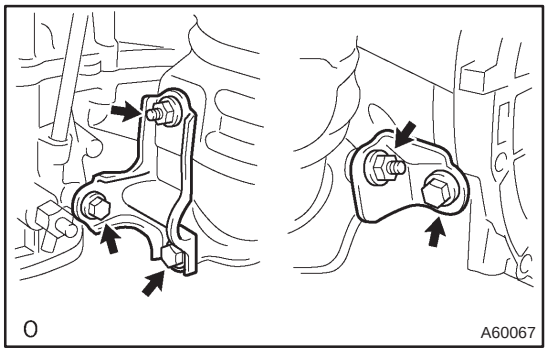


**82. REMOVE EXHAUST MANIFOLD CONVERTER SUB–ASSY**

(a) Remove the 3 bolts and 2 nuts, and then detach the No. 1 and No. 2 exhaust manifold stays.

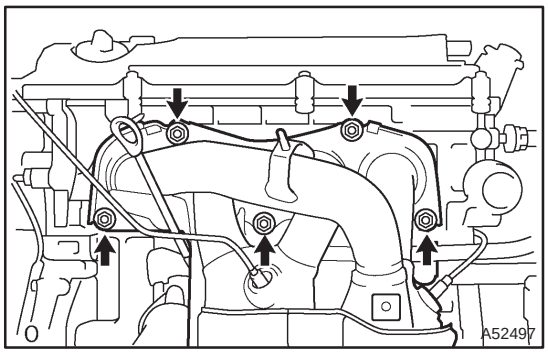


(b) Remove the 5 nuts, and then remove the exhaust manifold converter and gasket.

**83. REMOVE WATER INLET**

(a) Remove the 2 nuts and the water inlet.

**84. REMOVE THERMOSTAT**

**85. REMOVE IGNITION COIL ASSY**

(a) Remove the 4 bolts and the 4 ignition coils.

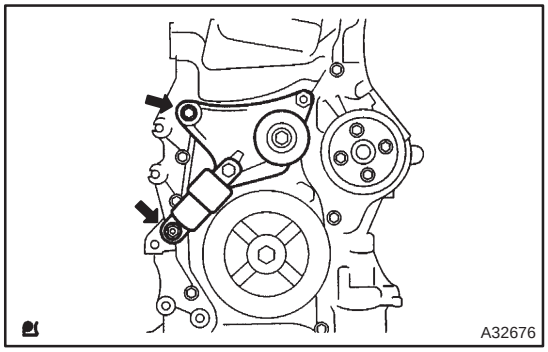


**86. REMOVE V–RIBBED BELT TENSIONER ASSY**

(a) Remove the bolt and nut, and then remove the V–ribbed belt tensioner.

**87. REMOVE DRIVE SHAFT BEARING BRACKET**

(a) Remove the 3 bolts and the drive shaft bearing bracket.

**88. REMOVE FUEL DELIVERY PIPE W/INJECTOR (See page 11–26)**

**89. REMOVE WATER BY–PASS PIPE NO.1**

(a) Remove the bolt and 2 nuts, and then detach the water by–pass pipe No. 1.

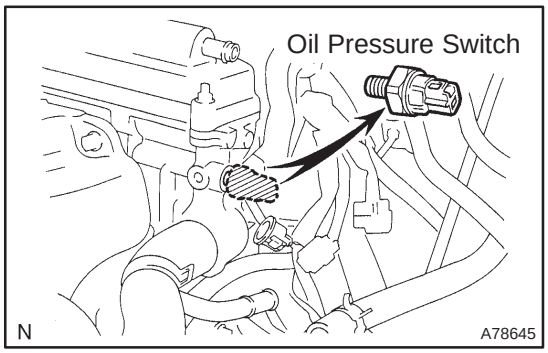


**90. REMOVE ENGINE OIL PRESSURE SWITCH ASSY**

(a) Using SST, remove the engine oil pressure switch.
SST 09268–46021



cardiagn.com

**91. REMOVE KNOCK SENSOR**

(a) Remove the nut and the knock sensor.

**92. REMOVE ENGINE COOLANT TEMPERATURE SENSOR**

(a) Using SST, remove the engine coolant temperature sensor.
SST 09817–33190

**93. REPLACE PARTIAL ENGINE ASSY**

**94. INSTALL ENGINE COOLANT TEMPERATURE SENSOR**

(a) Install a new gasket to the engine coolant temperature sensor.

(b) Install the engine coolant temperature sensor.
**Torque: 20 N·m (208 kgf·cm, 15 ft·lbf)**
SST 09817–33190

**95. INSTALL KNOCK SENSOR**
**Torque: 20 N·m (208 kgf·cm, 15 ft·lbf)**

**96. INSTALL ENGINE OIL PRESSURE SWITCH ASSY**

(a) Clean the threads of the oil pressure switch, apply adhesive there.
**Adhesive: Part No. 08833–00080 THREE BOND 1344 or equivalent**

(b) Install the oil pressure switch.
**Torque: 15 N·m (153 kgf·cm, 11 ft·lbf)**

**97. INSTALL WATER BY–PASS PIPE NO.1**

(a) Install a new gasket and the water by–pass pipe No. 1 with the bolt and 2 nuts.
**Torque: 9.0 N·m (92 kgf·cm, 80 in.·lbf)**

**98. INSTALL FUEL DELIVERY PIPE W/INJECTOR (See page 11–26)**

**99. INSTALL DRIVE SHAFT BEARING BRACKET**
**Torque: 54 N·m (551 kgf·cm, 40 ft·lbf)**

**100. INSTALL V–RIBBED BELT TENSIONER ASSY**
**Torque: 60 N·m (607 kgf·cm, 44 ft·lbf)**

**101. INSTALL IGNITION COIL ASSY**
**Torque: 9.0 N·m (92 kgf·cm, 80 in.·lbf)**

**102. INSTALL THERMOSTAT (See page 16–23)**

**103. INSTALL WATER INLET**
**Torque: 9.0 N·m (92 kgf·cm, 80 in.·lbf)**

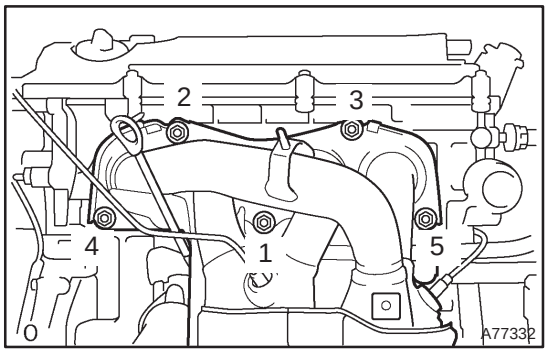


**104. INSTALL EXHAUST MANIFOLD CONVERTER SUB–ASSY**

(a) Install a new gasket and the exhaust manifold converter with the 5 nuts.
**Torque: 37 N·m (378 kgf·cm, 27 ft·lbf)**

cardiagn.com

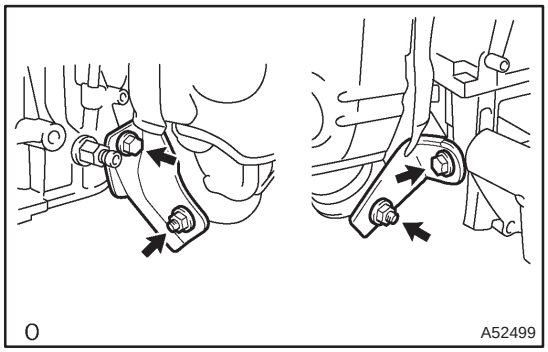


(b) Install the No. 1 and No. 2 exhaust manifold stays with the 2 bolts and 2 nuts.
**Torque: 44 N·m (449 kgf·cm, 32 ft·lbf)**

**105. INSTALL MANIFOLD CONVERTER INSULATOR NO.1**
**Torque: 12 N·m (122 kgf·cm, 9.0 ft·lbf)**

**106. INSTALL OIL LEVEL GAGE GUIDE**

(a) Apply a light coat of engine oil to the O–ring, install it to the oil level gauge guide.
(b) Install the oil level gauge and guide with the bolt.
**Torque: 9.0 N·m (92 kgf·cm, 80 in.·lbf)**

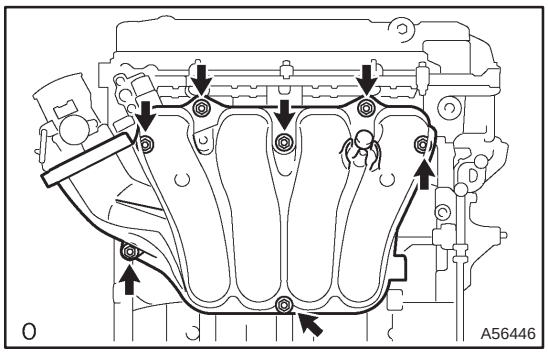


**107. INSTALL INTAKE MANIFOLD**

(a) Install a new gasket and the intake manifold with the 5 bolts and 2 nuts.
**Torque: 30 N·m (306 kgf·cm, 22 ft·lbf)**

**108. INSTALL CAMSHAFT TIMING OIL CONTROL VALVE ASSY (W/ VVT–i)**

(a) Apply light coat of engine oil to the new O–ring and install it to the camshaft timing oil control valve.
(b) Install the camshaft oil control valve with the bolt.
**Torque: 9.0 N·m (92 kgf·cm, 79 in.·lbf)**

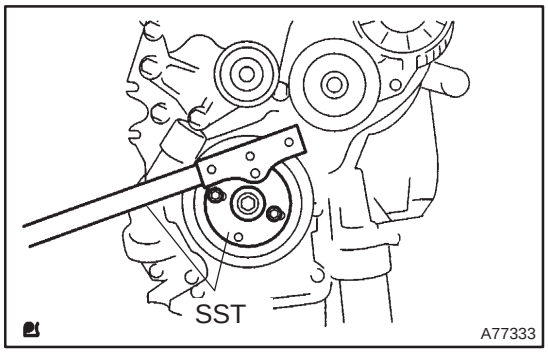


**109. INSTALL DRIVE PLATE AND RING GEAR OR FLYWHEEL**

(a) Hold the crankshaft with SST.
SST 09213–54015 (91651–60855), 09330–00021
**Adhesive:**
**Part No. 08833–00070, THREE BOND or equivalent**

cardiagn.com

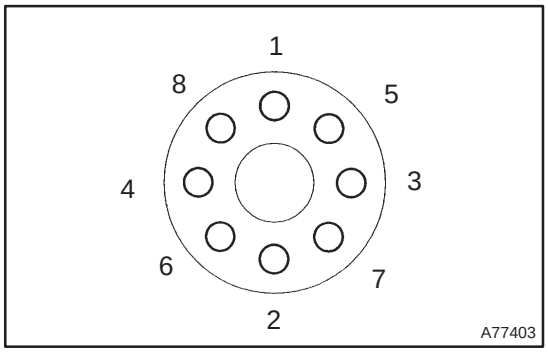


(b) Install the drive plate. (A/T)
(1) Clean the bolt and bolt hole.
(2) Apply adhesive to the bolts.
(3) Using several steps, install and tighten the 8 bolts uniformly in the sequence shown in the illustration.
**Torque: 98 N·m (1,000 kgf·cm, 72 ft·lbf)**

(c) Install the flywheel. (M/T)
(1) Clean the bolt hole.
(2) Using several steps, install and tighten the 8 bolts uniformly in the sequence shown in the illustration.
**Torque: 130 N·m (1,327 kgf·cm, 96 ft·lbf)**

**NOTICE:**
**Do not reuse the flywheel bolt.**

**110. INSTALL CLUTCH DISC ASSY (M/T TRANSAXLE) (See page 42–26)**
**111. INSTALL CLUTCH COVER ASSY (M/T TRANSAXLE) (See page 42–26)**
**112. INSTALL MANUAL TRANSAXLE ASSY (M/T TRANSAXLE) (See page 41–24)**
**113. INSTALL AUTOMATIC TRANSAXLE ASSY (A/T TRANSAXLE) (See page 40–25)**
**114. INSTALL FRONT DRIVE SHAFT ASSY LH (See page 30–6)**
**115. INSTALL FRONT DRIVE SHAFT ASSY RH (See page 30–6)**
**116. INSTALL FRONT SUSPENSION CROSSMEMBER W/CENTER MEMBER**
(a) Install the engine mounting insulator FR with the through bolt and nut.
**Torque: 87 N·m (887 kgf·cm, 64 ft·lbf)**
(b) Install the engine mounting insulator RR with the through bolt and nut.
**Torque: 87 N·m (887 kgf·cm, 64 ft·lbf)**
**117. INSTALL STARTER ASSY (See page 19–12)**
**118. INSTALL VANE PUMP ASSY**
**Torque: 37 N·m (370 kgf·cm, 27 ft·lbf)**

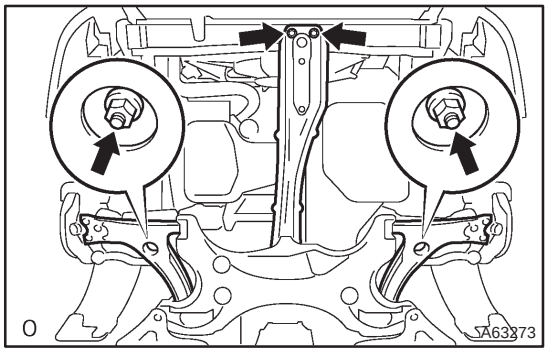


**119. INSTALL ENGINE ASSEMBLY WITH TRANSAXLE**
(a) Install the 2 bolts and 2 nuts as shown in the illustration.
**Torque:**
**Bolt 45 N·m (459 kgf·cm, 33 ft·lbf)**
**Nut 133 N·m (1,356 kgf·cm, 98 ft·lbf)**

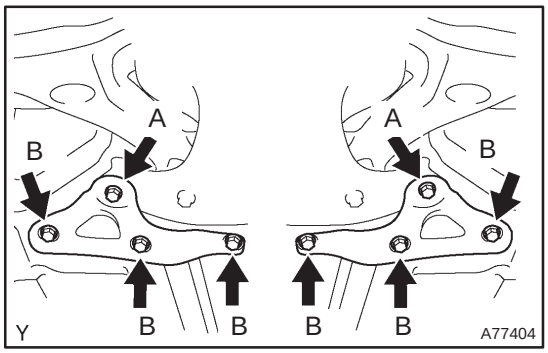


(b) Install the front suspension member braces with the 8 bolts.
**Torque:**
**Bolt A 133 N·m (1,356 kgf·cm, 98 ft·lbf)**
**Bolt B 80 N·m (816 kgf·cm, 59 ft·lbf)**



cardiagn.com

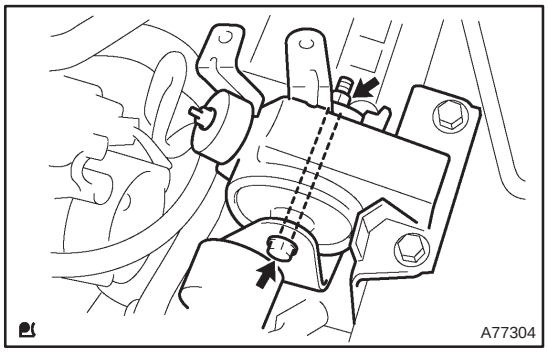


**120. INSTALL TRANSVERSE ENGINE ENGINE MOUNTING INSULATOR**
**Torque: 87 N·m (887 kgf·cm, 64 ft·lbf)**

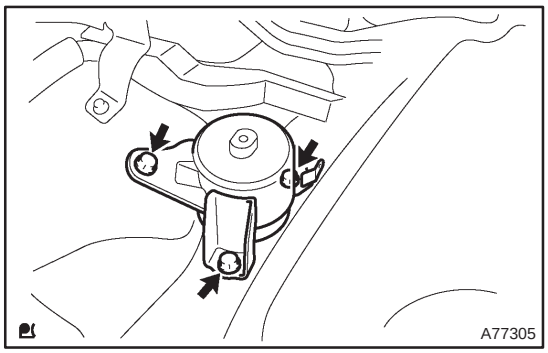


**121. INSTALL TRANSVERSE ENGINE ENGINE MOUNTING INSULATOR**
**Torque: 52 N·m (530 kgf·cm, 38 ft·lbf)**

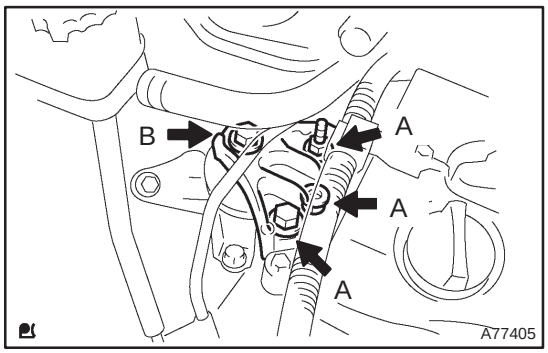


**122. INSTALL ENGINE MOUNTING BRACKET NO.2 RH**
**Torque:**
**A 52 N·m (530 kgf·cm, 38 ft·lbf)**
**B 113 N·m (1,152 kgf·cm, 83 ft·lbf)**

**123. REMOVE ENGINE HANGERS**
**124. INSTALL STEERING INTERMEDIATE SHAFT ASSY NO.2 (See page 50–9)**
**125. INSTALL TRANSMISSION CONTROL CABLE ASSY (M/T TRANSAXLE) (See page 41–24)**
**126. INSTALL TRANSMISSION CONTROL CABLE ASSY (A/T TRANSAXLE) (See page 40–25)**
**127. INSTALL CLUTCH RELEASE CYLINDER ASSY (M/T TRANSAXLE)**

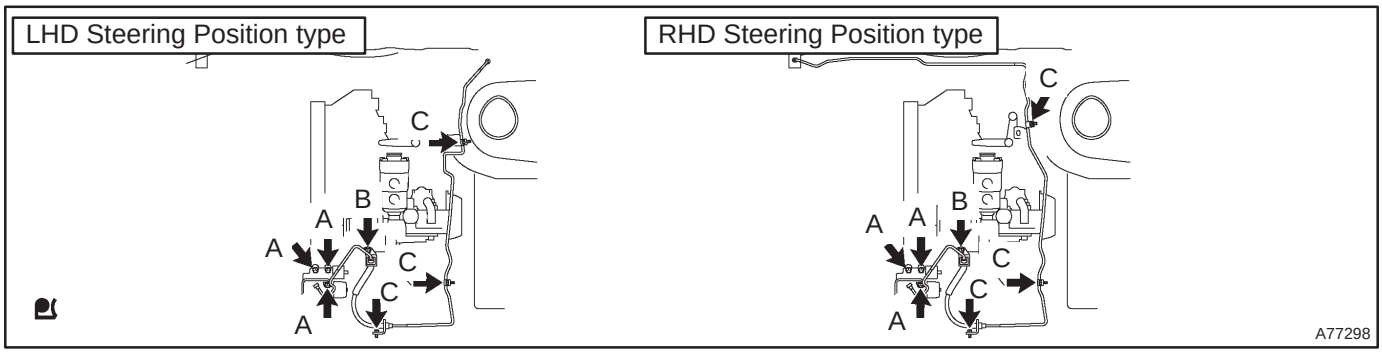


**Torque:**
**Bolt A 12 N·m (122 kgf·cm, 89 ft·lbf)**
**Bolt B 9.0 N·m (92 kgf·cm, 79 in.·lbf)**
**Bolt C 5.0 N·m (51 kgf·cm, 44 in.·lbf)**



cardiagn.com

**128. INSTALL FRONT AXLE ASSY LH**
**Torque: 294 N·m (3,000 kgf·cm, 217 ft·lbf)**
**129. INSTALL FRONT AXLE ASSY RH**
**Torque: 294 N·m (3,000 kgf·cm, 217 ft·lbf)**
**130. INSTALL FRONT SUSPENSION ARM SUB–ASSY LOWER NO.1 LH (M/T TRANSAXLE)**
**Torque: 142 N·m (1,448 kgf·cm, 104 ft·lbf)**
**131. INSTALL FRONT SUSPENSION ARM SUB–ASSY LOWER NO.1 LH (A/T TRANSAXLE)**
**Torque: 142 N·m (1,448 kgf·cm, 104 ft·lbf)**
**132. INSTALL FRONT SUSPENSION ARM SUB–ASSY LOWER NO.1 RH (M/T TRANSAXLE)**
**Torque: 142 N·m (1,448 kgf·cm, 104 ft·lbf)**
**133. INSTALL FRONT SUSPENSION ARM SUB–ASSY LOWER NO.1 RH (A/T TRANSAXLE)**
**Torque: 142 N·m (1,448 kgf·cm, 104 ft·lbf)**
**134. INSTALL FRONT STABILIZER LINK ASSY LH**
**Torque: 74 N·m (755 kgf·cm, 55 ft·lbf)**
**135. INSTALL FRONT STABILIZER LINK ASSY RH**
**Torque: 74 N·m (755 kgf·cm, 55 ft·lbf)**
**136. INSTALL TIE ROD END SUB–ASSY LH (See page 51–36)**
**137. INSTALL TIE ROD END SUB–ASSY RH**
HINT:
Perform the same procedure as above on the opposite side.
**138. INSTALL FRONT AXLE HUB LH NUT (See page 30–6)**
**139. INSTALL FRONT AXLE HUB RH NUT**
HINT:
Perform the same procedure as above on the opposite side.
**140. INSTALL EXHAUST PIPE ASSY FRONT (See page 15–7)**
**141. INSTALL EXHAUST PIPE ASSY CENTER (See page 15–7)**
**142. INSTALL FLOOR PANEL BRACE FRONT**
**Torque: 30 N·m (306 kgf·cm, 22 ft·lbf)**
**143. INSTALL ENGINE SERVICE COVER BRACKET RH (W/O AIR CONDITIONING)**
**Torque: 9.0 N·m (92 kgf·cm, 80 in.·lbf)**
**144. INSTALL COOLER BRACKET (LHD(W/ AIR CONDITIONER) STEERING POSITION TYPE)**
**Torque: 9.0 N·m (92 kgf·cm, 80 in.·lbf)**
**145. INSTALL ENGINE SERVICE COVER BRACKET RH (RHD(W/ AIR CONDITIONER) STEERING POSITION TYPE)**
**Torque: 9.0 N·m (92 kgf·cm, 80 in.·lbf)**
**146. INSTALL COOLER REFRIGERANT SUCTION HOSE NO.1 (LHD(W/ AIR CONDITIONER) STEERING POSITION TYPE)**
**147. INSTALL OIL RESERVOIR BRACKET NO.1**
**Torque: 8.0 N·m (82 kgf·cm, 71 in.·lbf)**
**148. INSTALL RETURN TUBE SUB–ASSY**
**Torque: 8.0 N·m (82 kgf·cm, 71 in.·lbf)**
**149. INSTALL RADIATOR RESERVE TANK SUB–ASSY**
**Torque: 5.0 N·m (51 kgf·cm, 44 in.·lbf)**
**150. INSTALL BATTERY CARRIER**
**151. INSTALL AIR CLEANER ASSEMBLY WITH HOSE**
**Torque: 5.0 N·m (51 kgf·cm, 44 in.·lbf)**
**152. INSTALL COMPRESSOR AND MAGNETIC CLUTCH (W/ AIR CONDITIONING)**
**Torque: 25 N·m (255 kgf·cm, 18 in.·lbf)**
**153. INSTALL GENERATOR ASSY (See page 19–20)**
**154. INSTALL FAN AND GENERATOR V BELT (See page 14–105)**



cardiagn.com

155. INSTALL RADIATOR ASSY (See page 16–24)
156. INSTALL RADIATOR RELAY BLOCK
Torque: 5.0 N·m (51 kgf·cm, 44 in.·lbf)
157. INSTALL ENGINE COVER SUB–ASSY NO.1
Torque: 7.0 N·m (71 kgf·cm, 62 in.·lbf)
158. ADD MANUAL TRANSAXLE OIL (M/T TRANSAXLE)
159. ADD AUTOMATIC TRANSAXLE FLUID (A/T TRANSAXLE)
160. ADD ENGINE OIL
161. ADD COOLANT (See page 16–19)
162. ADD POWER STEERING FLUID
163. BLEED POWER STEERING FLUID
164. CHECK FOR ENGINE OIL LEAKS
165. CHECK FOR ENGINE COOLANT LEAKS (See page 16–13)
166. CHECK FOR FUEL LEAKS (See page 11–15)
167. INSTALL FRONT WHEELS
Torque: 103 N·m (1,050 kgf·cm, 76 ft·lbf)
168. ADJUST FRONT WHEEL ALIGNMENT (See page 26–6)
169. INSPECT CHECK IDLE SPEED AND IGNITION TIMING (See page 14–101)
170. INSPECT CO/HC (See page 14–101)
171. CHECK ABS SPEED SENSOR SIGNAL

cardiagn.com

# PARTIAL ENGINE ASSY (1CD–FTV)

141C3–01

## COMPONENTS

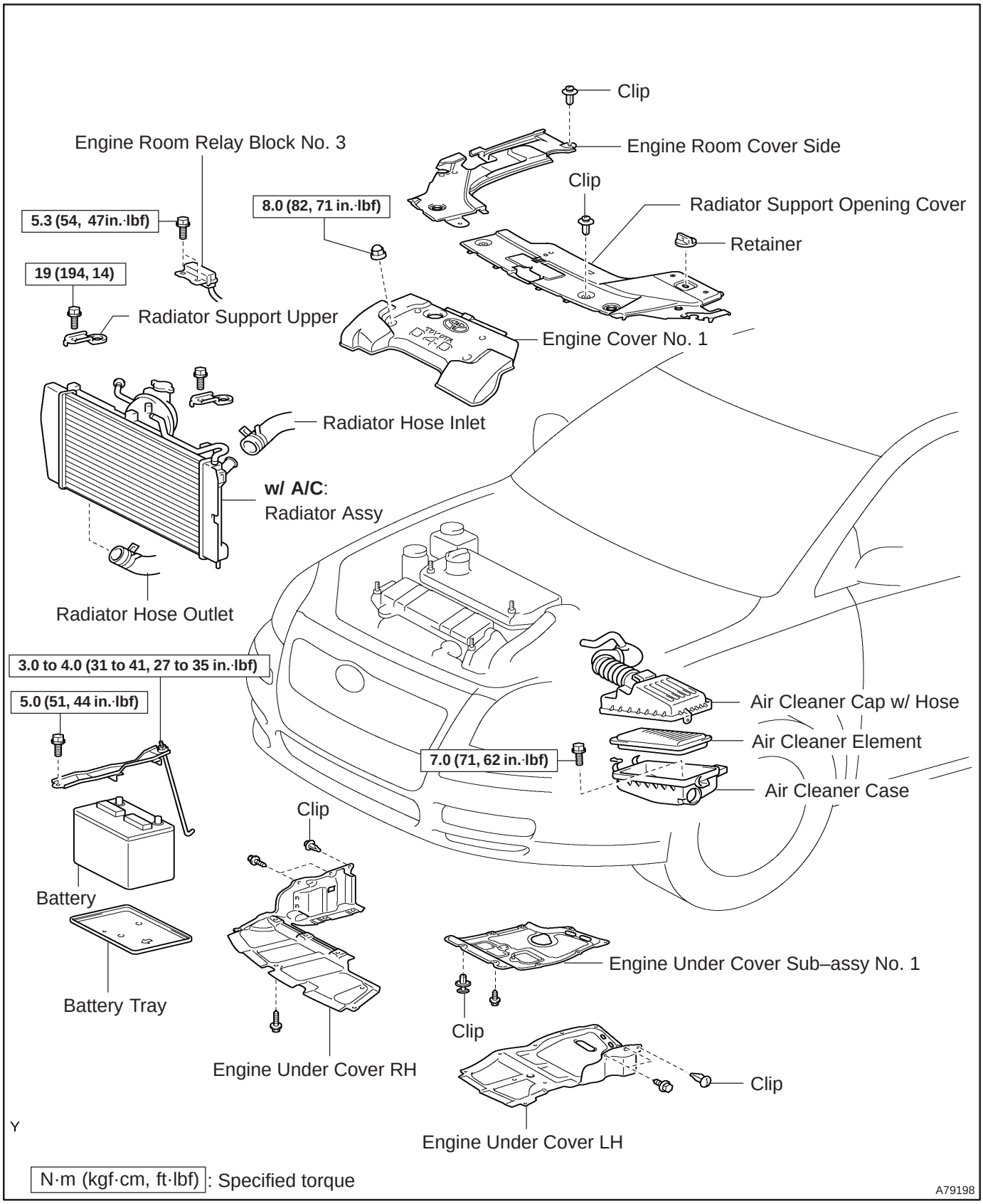


cardiagn.com

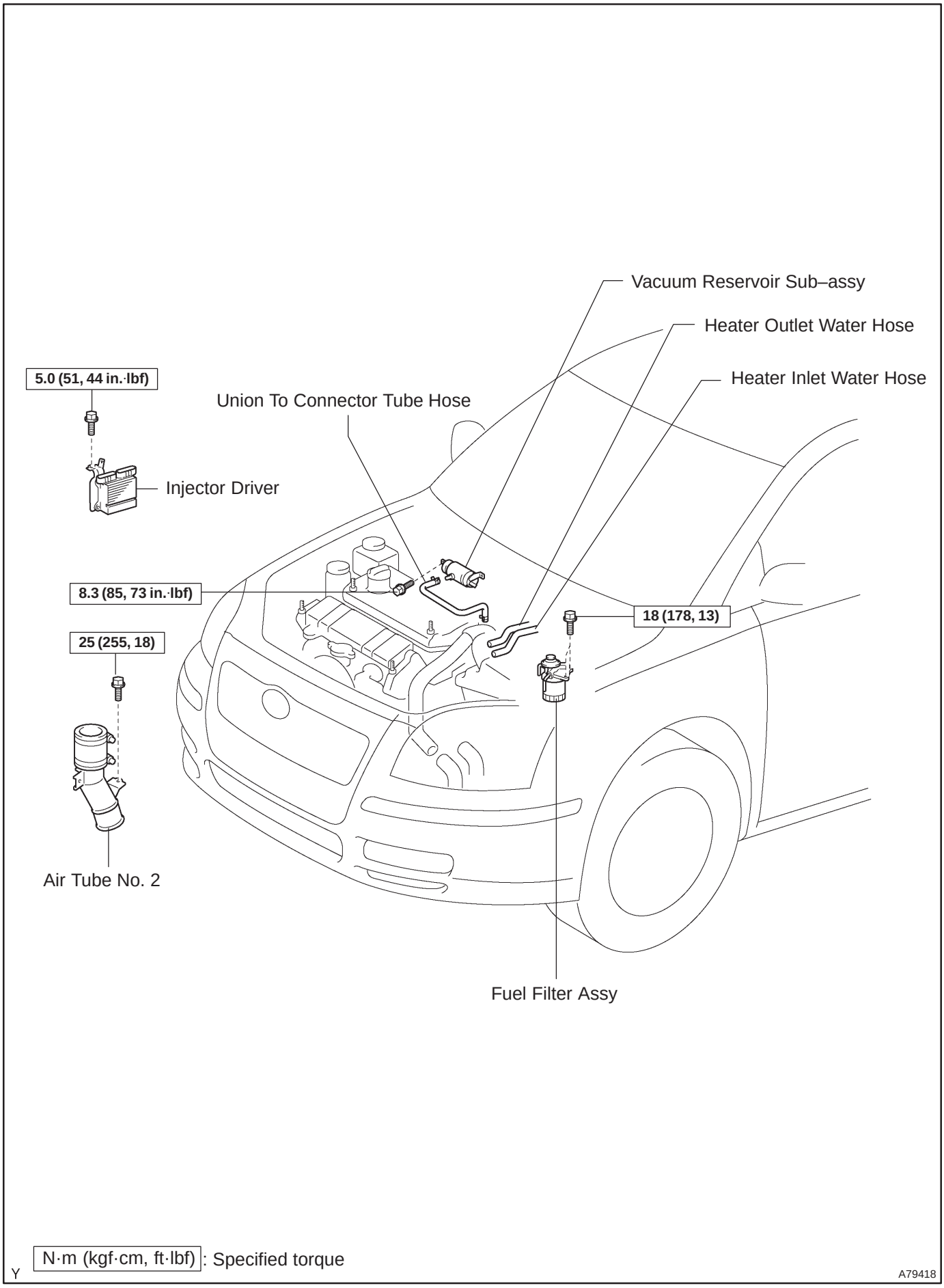


cardiagn.com

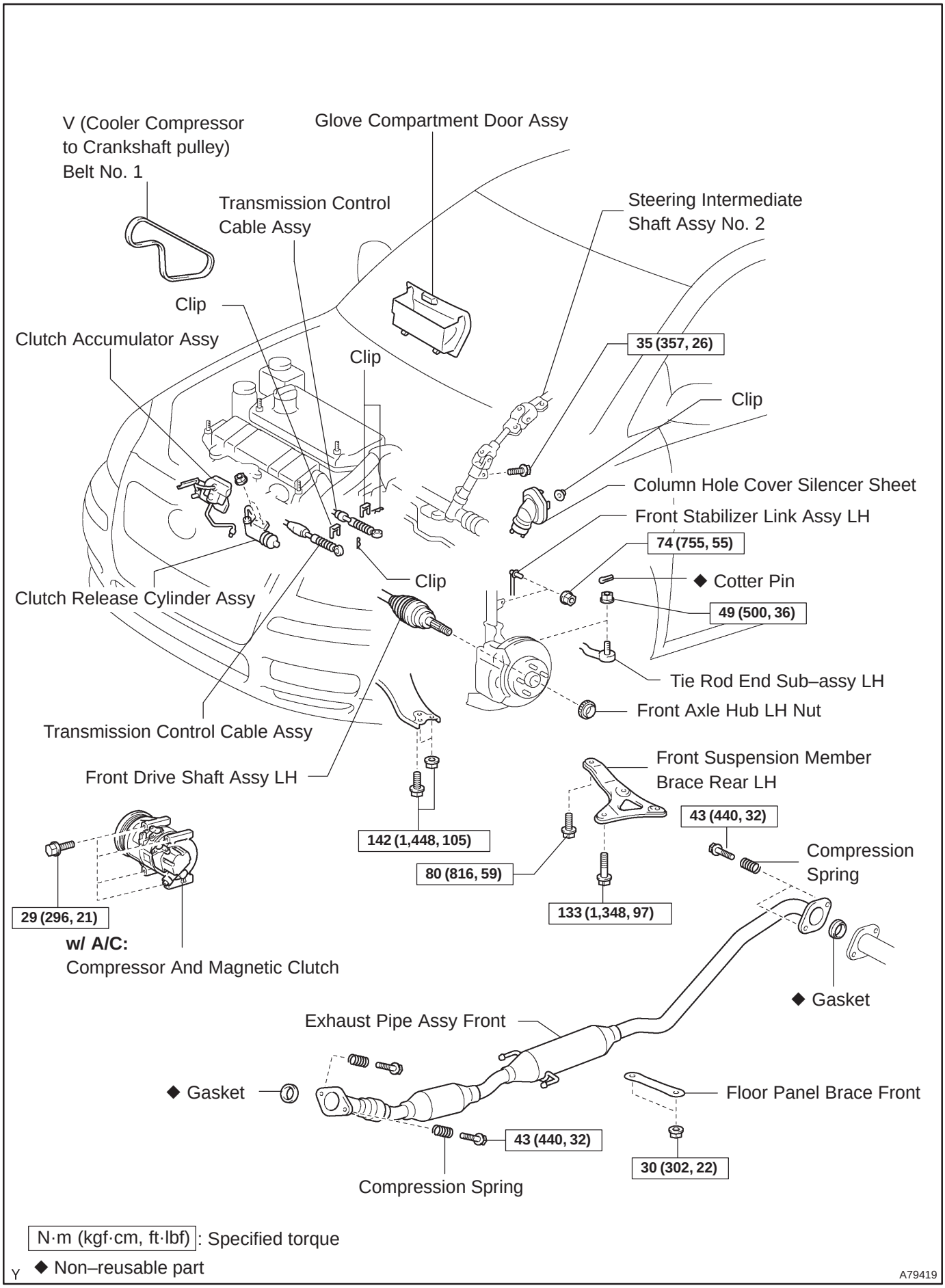


cardiagn.com

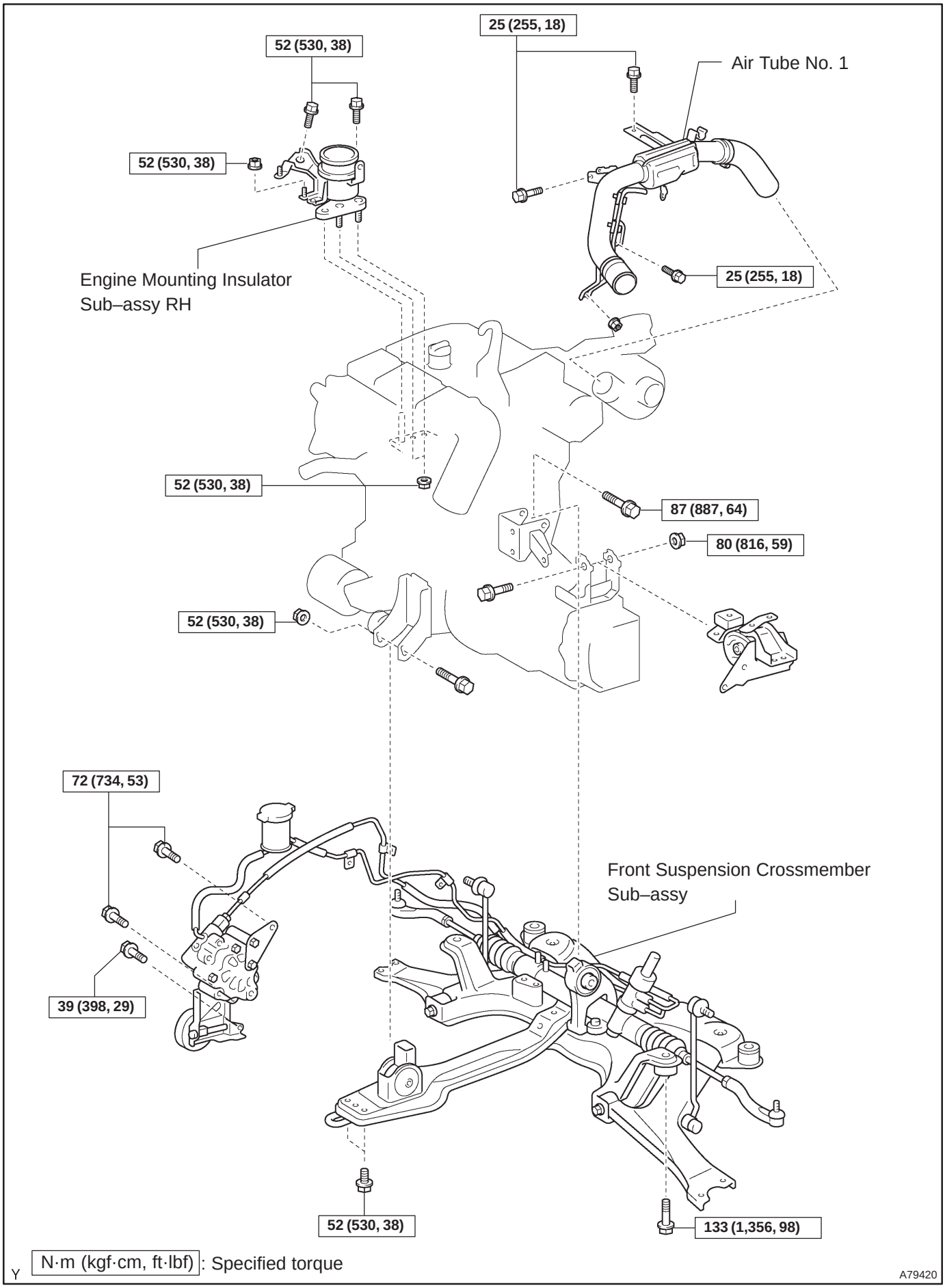


cardiagn.com

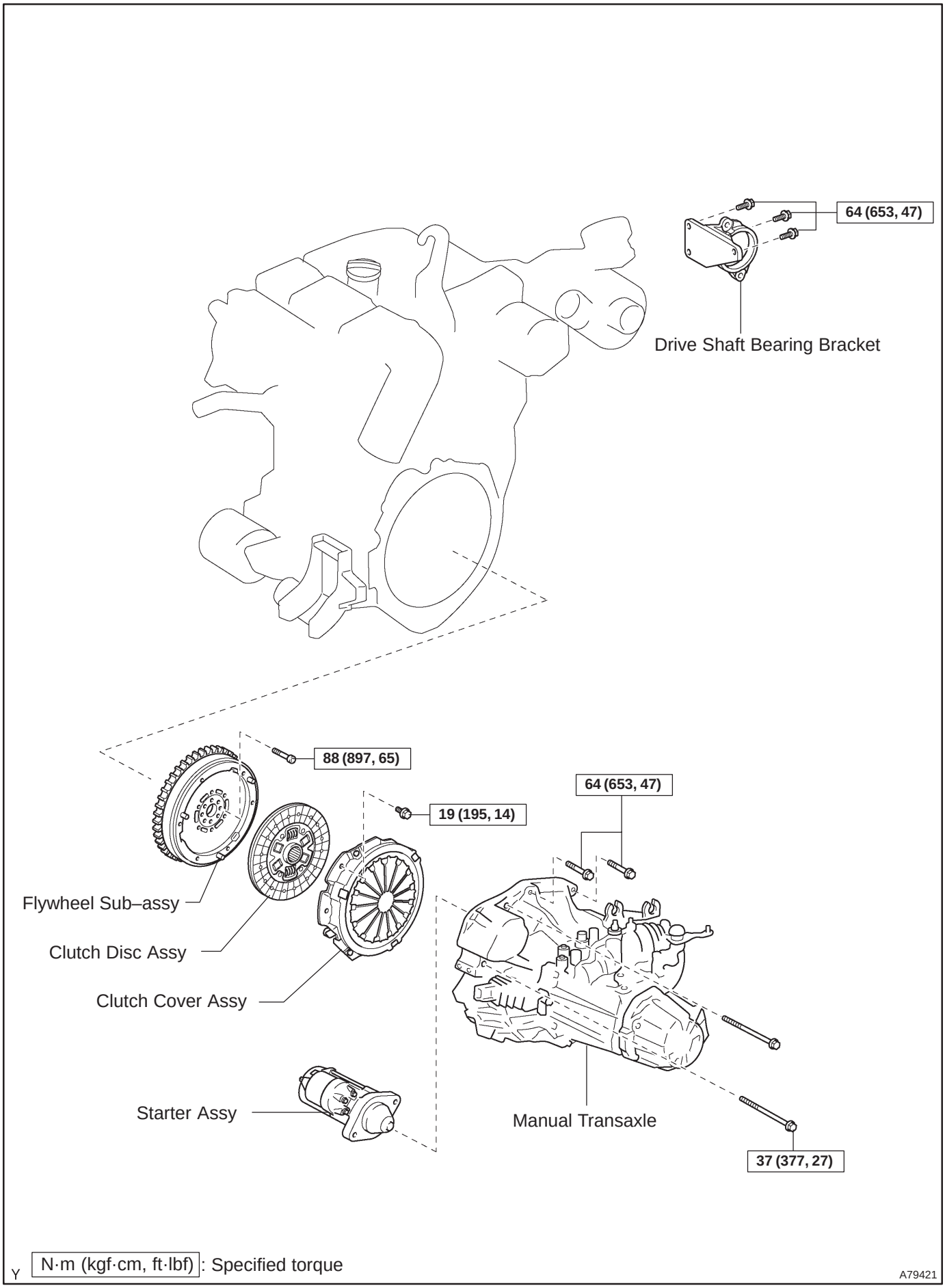


cardiagn.com

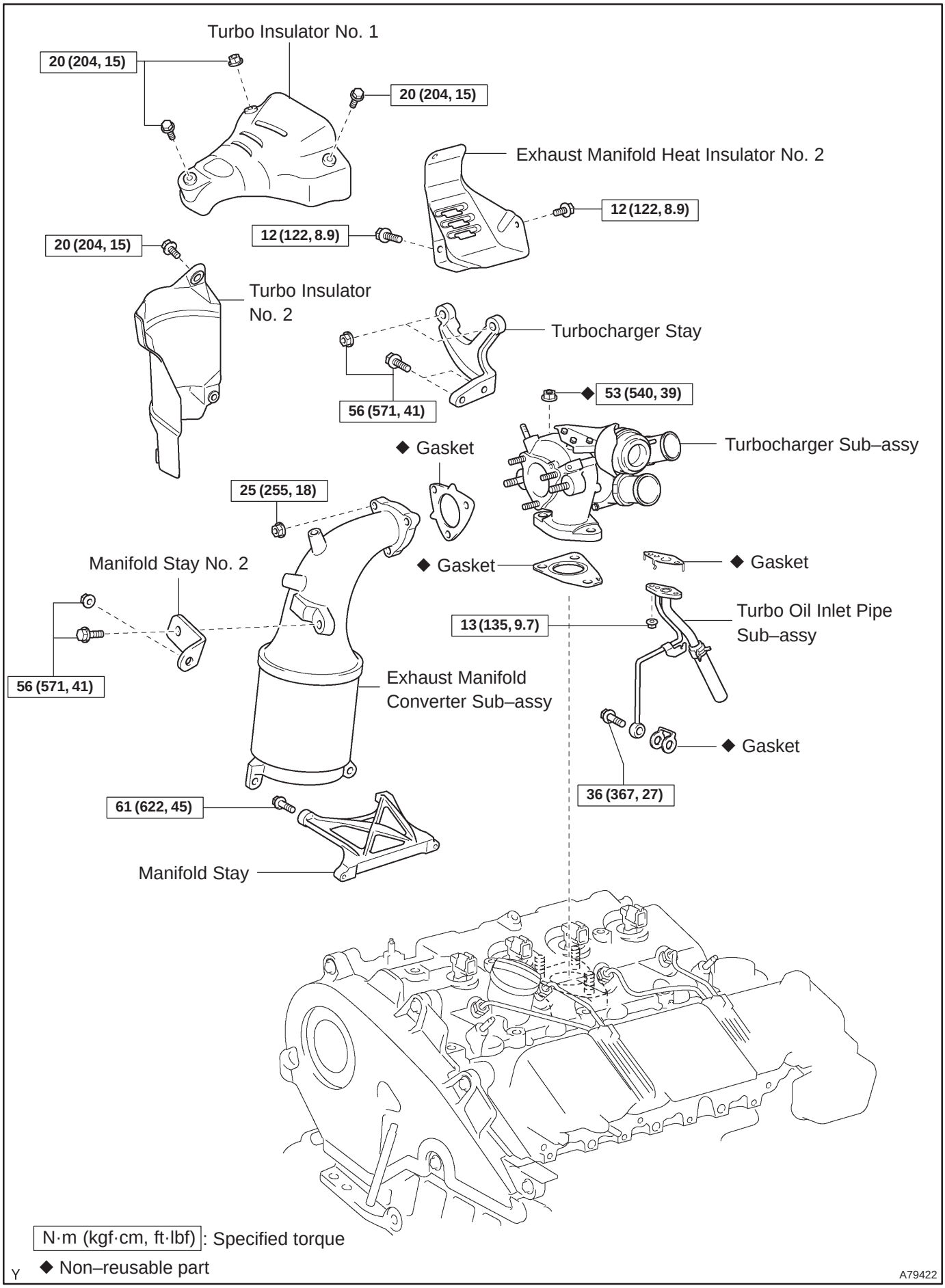


cardiagn.com

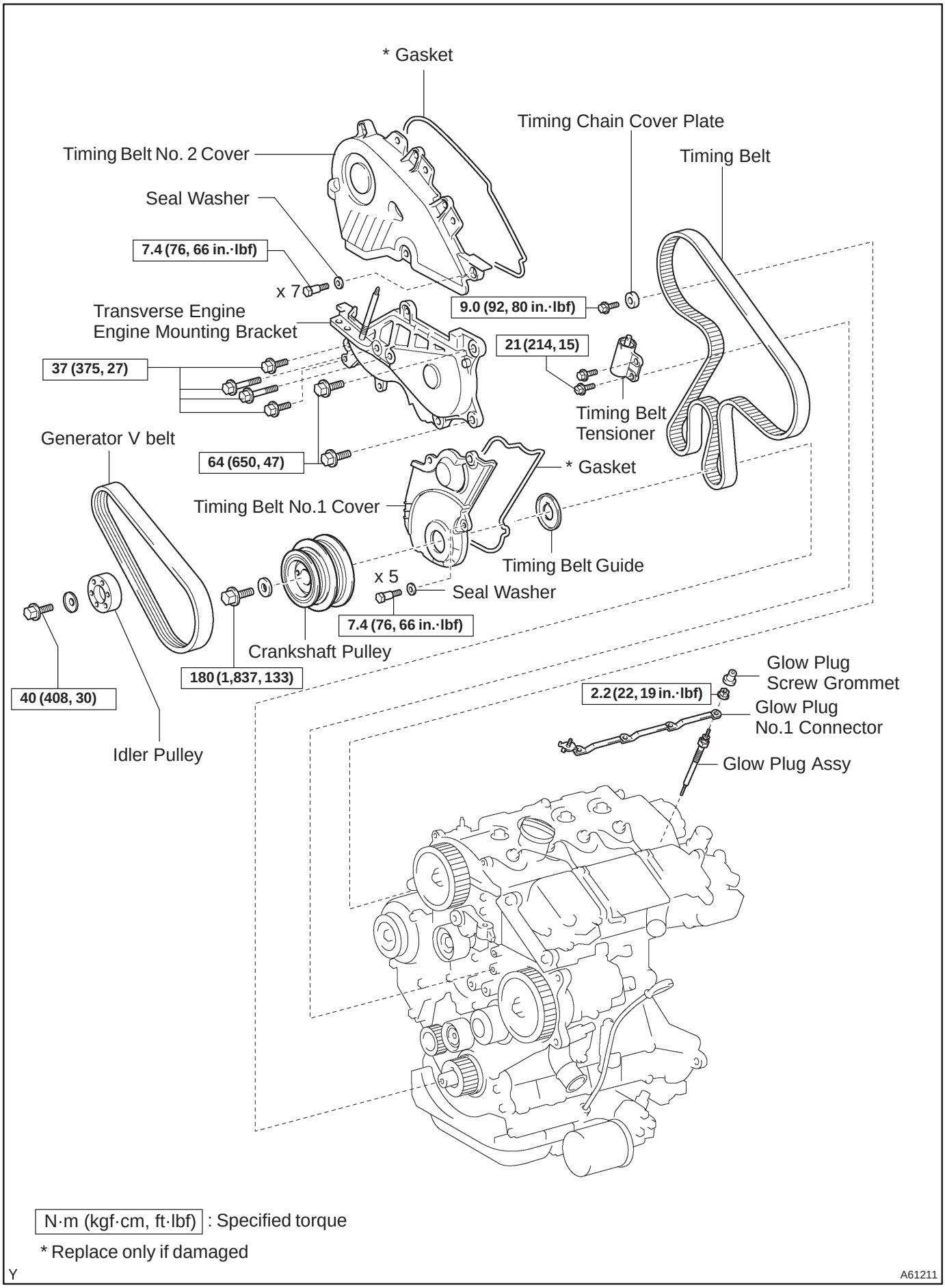


cardiagn.com

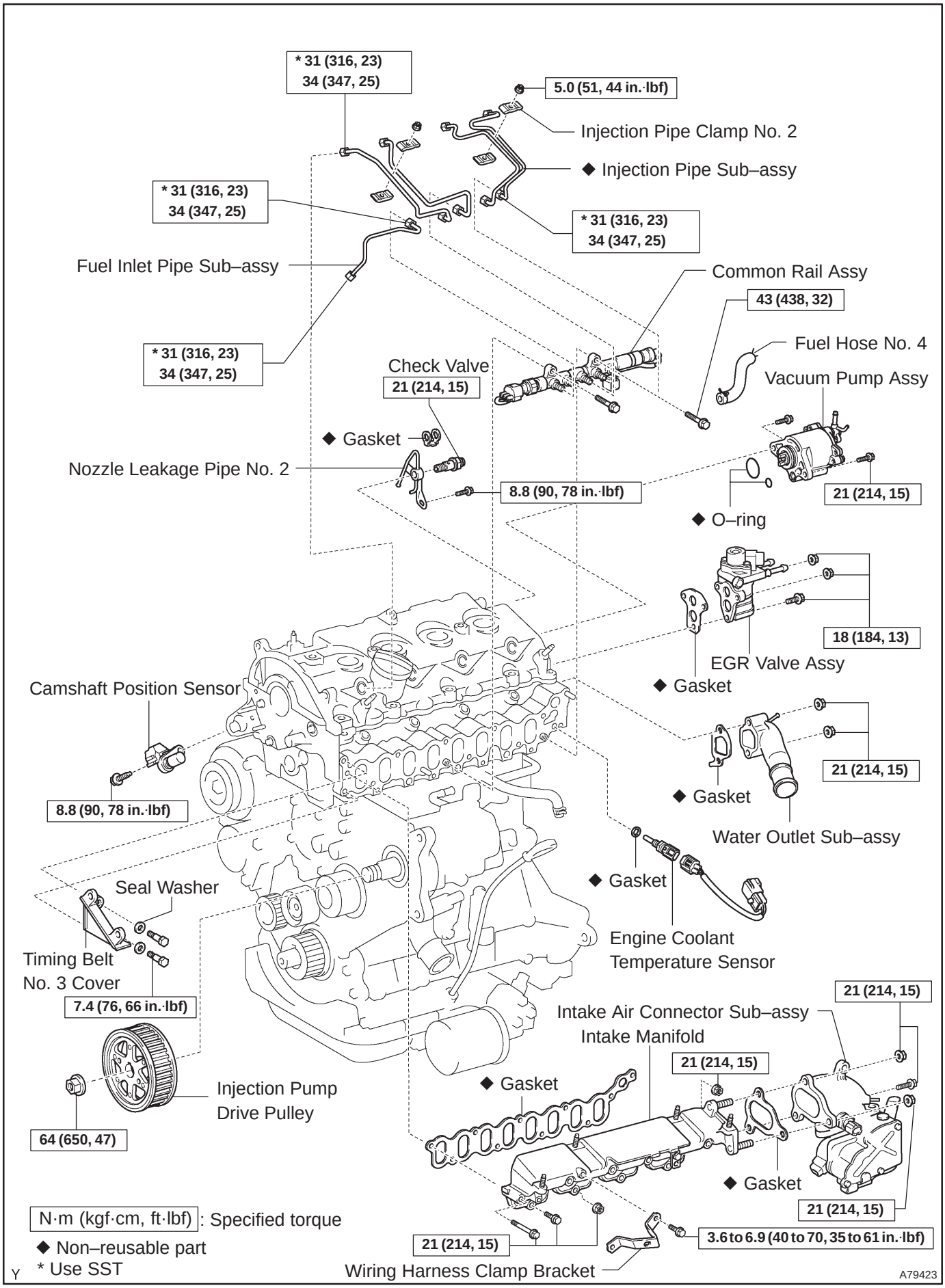


cardiagn.com

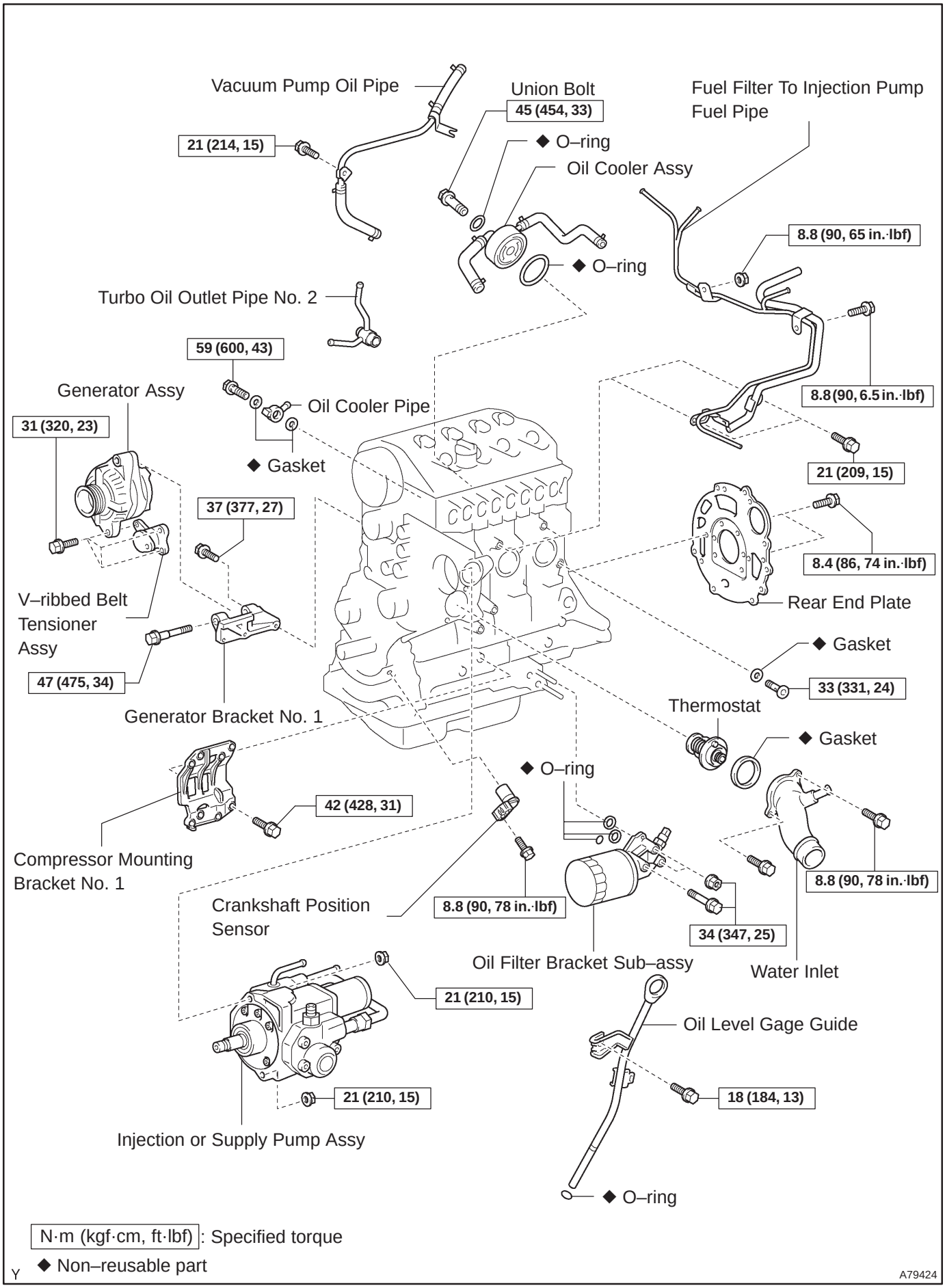


cardiagn.com

141C4–01

# REPLACEMENT

**1. REMOVE FRONT WHEELS**
**2. REMOVE ENGINE UNDER COVER LH**
**3. REMOVE ENGINE UNDER COVER SUB–ASSY NO.1**
**4. REMOVE ENGINE UNDER COVER RH**
**5. REMOVE RADIATOR SUPPORT OPENING COVER**
**6. REMOVE ENGINE ROOM COVER SIDE**
**7. DRAIN ENGINE COOLANT (See page 16–44)**
**8. DRAIN ENGINE OIL (See page 14–342)**
**9. DRAIN MANUAL TRANSAXLE OIL**
**Torque: 49 N·m (500 kgf·cm, 36 ft·lbf)**
**10. REMOVE ENGINE COVER NO.1**
(a) Remove the 5 nuts and the engine cover.
**11. REMOVE BATTERY**
**12. REMOVE AIR CLEANER ASSY**
(a) Disconnect the connector.
(b) Remove the air cleaner cap together with the air cleaner hose.
(c) Remove the air cleaner filter element.
(d) Remove the 3 bolts and the air cleaner case.
**13. DISCONNECT UNION TO CONNECTOR TUBE HOSE**
**14. REMOVE FUEL FILTER ASSY**
(a) Disconnect the 2 fuel hose from the fuel filter (STD).
(b) Disconnect the 3 fuel hose from the fuel filter (COLD).
(c) Disconnect the connector (STD).
(d) Disconnect the 2 connectors (COLD).
(e) Remove the 2 bolts and the fuel filter.
**15. REMOVE RADIATOR HOSE INLET**
**16. REMOVE RADIATOR HOSE OUTLET**
**17. DISCONNECT WATER BY–PASS HOSE NO.2**
**18. REMOVE ENGINE ROOM RELAY BLOCK NO.3**
(a) Remove the 2 bolts and the engine room relay block.
**19. REMOVE RADIATOR ASSY (W/ AIR CONDITIONING) (See page 16–51)**
**20. DISCONNECT HEATER INLET WATER HOSE**
**21. DISCONNECT HEATER OUTLET WATER HOSE**
**22. DISCONNECT FUEL HOSE NO.2**

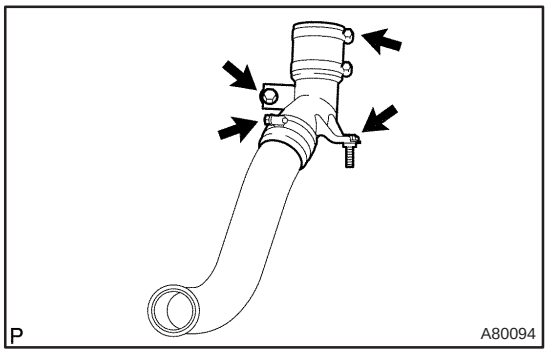


**23. REMOVE AIR TUBE NO.2**
(a) Loosen the hose clamp and disconnect the air hose No. 3.
(b) Remove the 2 bolts and the air tube No. 2.

cardiagn.com

**24. SEPARATE TRANSMISSION CONTROL CABLE ASSY**

(a) Remove the 2 clips and 2 washers, separate the control cable assy.

**25. REMOVE INJECTOR DRIVER**

(a) Remove the 2 nuts which is used to secure the injector driver.

(b) Disconnect the injector driver connector and the harness clamp.

(c) Remove the injector driver.

**26. DISCONNECT ENGINE WIRE**

(a) Remove the glove compartment door.

(b) Disconnect the engine wire from the ECM and the junction block.

(c) Pull out the engine wire.

(d) Disconnect the engine wire from engine room junction block.

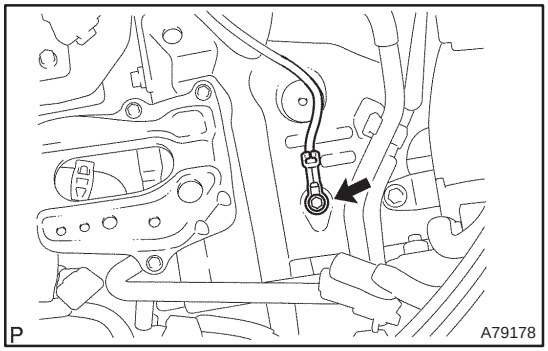


(e) Remove the bolt and disconnect the wire harness from the body.

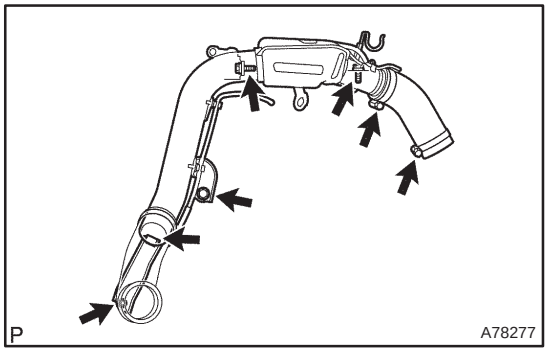


**27. REMOVE AIR TUBE NO.1**

(a) Loosen the hose clamps.

(b) Remove the 2 bolts and nut, and then detach the air tube No. 1.

**28. REMOVE CLUTCH ACCUMULATOR ASSY (See page 42–17)**

SST 09023–00100

**29. REMOVE CLUTCH RELEASE CYLINDER ASSY (See page 42–17)**

**30. REMOVE V (COOLER COMPRESSOR TO CRANKSHAFT PULLEY) BELT NO.1 (See page 14–269)**

**31. SEPARATE COMPRESSOR AND MAGNETIC CLUTCH (W/ AIR CONDITIONING) (See page 55–86)**

HINT:

Secure the hoses off to the side instead of detaching.

**32. REMOVE FLOOR PANEL BRACE FRONT (See page 15–10)**

**33. REMOVE EXHAUST PIPE ASSY FRONT (See page 15–10)**

cardiagn.com

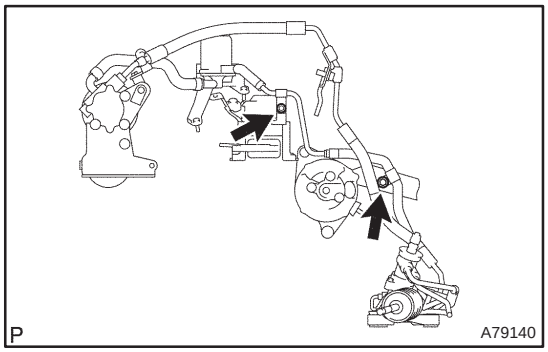


**34. SEPARATE RETURN TUBE SUB–ASSY**

(a) Remove the 2 clamp bolts and separate the return tube sub–assy.

**35. SEPARATE VANE PUMP OIL RESERVOIR ASSY**

**36. REMOVE FRONT AXLE HUB LH NUT (See page 30–6)**

SST 09930–00010

HINT:

Perform the same procedure as above on the opposite side.

**37. SEPARATE TIE ROD END SUB–ASSY LH (See page 30–6)**

SST 09628–62011

HINT:

Perform the same procedure as above on the opposite side.

**38. SEPARATE FRONT STABILIZER LINK ASSY LH (See page 26–26)**

HINT:

Perform the same procedure as above on the opposite side.

**39. REMOVE COLUMN HOLE COVER SILENCER SHEET**

(a) Remove the 2 clips and the column hole cover silencer sheet.

**40. REMOVE STEERING INTERMEDIATE SHAFT ASSY NO.2 (See page 51–36)**

**41. SEPARATE FRONT SUSPENSION ARM SUB–ASSY LOWER NO.1 LH (See page 26–21)**

HINT:

Perform the same procedure as above on the opposite side.

**42. SEPARATE FRONT DRIVE SHAFT ASSY LH (See page 30–6)**

HINT:

Perform the same procedure as above on the opposite side.

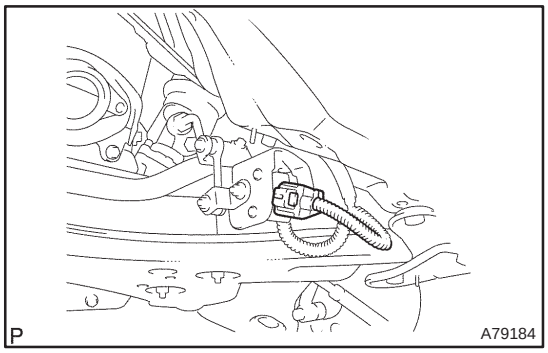


**43. REMOVE ENGINE ASSEMBLY WITH TRANSAXLE**

(a) Disconnect the height control sensor connector (w/ Discharge head lamp).

cardiagn.com

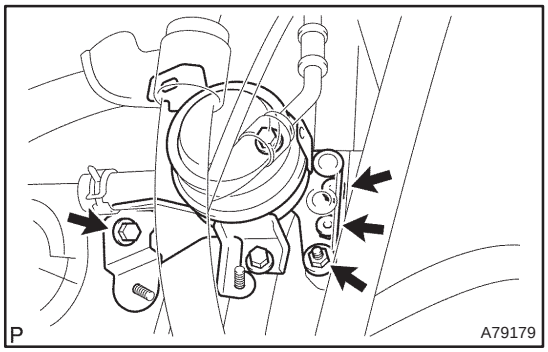


(b) Set the engine lifter.

(c) Remove the 3 bolts, 3 nuts and the engine mounting insulator sub–assy RH.

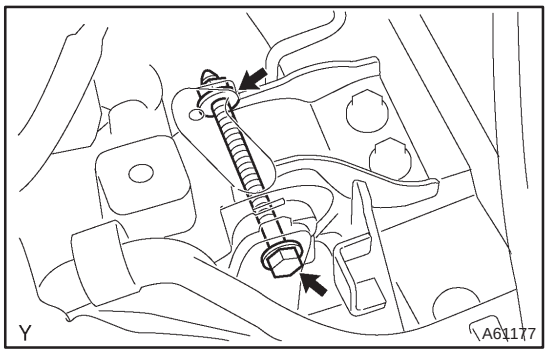


(d) Remove the through bolt and nut, detach the engine mounting insulator LH from the vehicle.

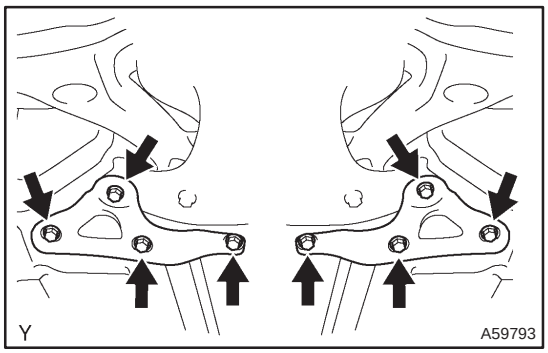


(e) Remove the 8 bolts and the front suspension member brace rear RH and LH.

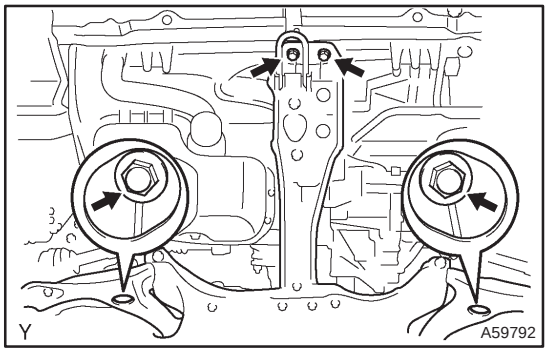


(f) Remove the 2 bolts and 2 nuts.

(g) Carefully remove the engine with transaxle from the vehicle.

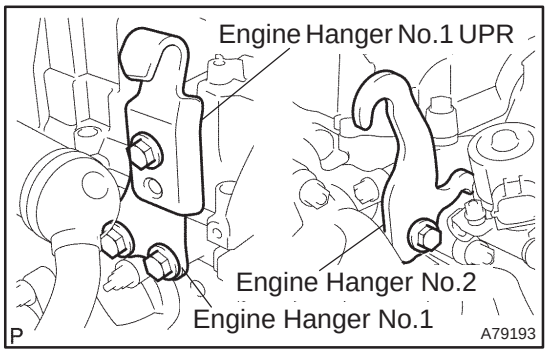


(h) Install the 2 engine hangers with the 2 bolts.
**Part No.:**
**No. 1 engine hanger UPR (yellow) 12284–27020**
**No. 1 engine hanger UPR (black) 12284–27030**
**No. 1 engine hanger 12281–27050**
**No. 2 engine hanger (yellow) 12282–27060**
**No. 2 engine hanger (black) 12282–27070**
**Bolt 91642–81025**
**Torque: 37 N·m (377 kgf·cm, 27 ft·lbf)**

cardiagn.com

(i) Attach the engine sling and hang the engine with the chain block.

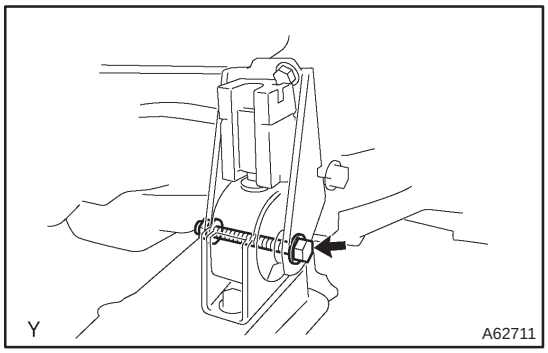


**44. REMOVE FRONT SUSPENSION CROSSMEMBER SUB–ASSY**

(a) Remove the through bolt and nut, detach the engine mounting insulator FR from the engine mounting bracket.

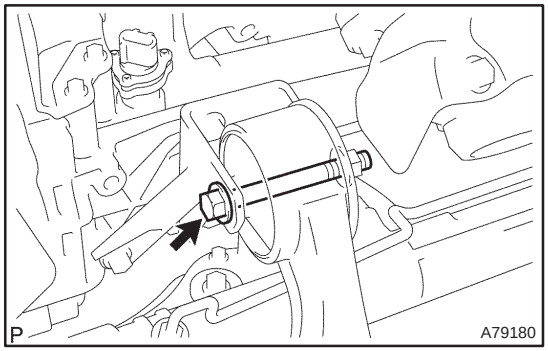


(b) Remove the through bolt, detach the engine mounting insulator RR from the suspension crossmember.

(c) Separate the engine and transaxle assembly from the suspension crossmember and engine mounting member.

**45. REMOVE STARTER ASSY (See page 19–24)**

**46. REMOVE MANUAL TRANSAXLE (See page 41–33)**

**47. REMOVE CLUTCH DISC ASSY (See page 42–26)**

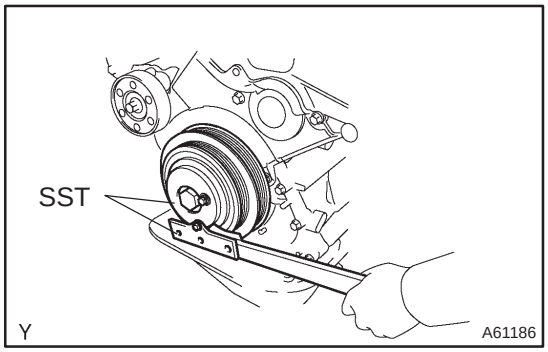


**48. REMOVE FLYWHEEL SUB–ASSY**

(a) Hold the crank shaft with SST.
SST 09213–54015 (90105–08076), 09330–00021

(b) Using a torx socket wrench (T55), remove the 8 torx screws and the flywheel.

**49. REMOVE REAR END PLATE**

(a) Remove the 2 bolts and the rear end plate.

**50. REMOVE DRIVE SHAFT BEARING BRACKET**

**51. REMOVE ENGINE MOUNTING BRACKET FR**

**52. REMOVE ENGINE MOUNTING BRACKET RR**

**53. REMOVE GLOW PLUG ASSY (See page 19–33)**

**54. REMOVE GENERATOR V BELT (See page 14–269)**

**55. REMOVE CRANKSHAFT PULLEY (See page 14–307)**

SST 09213–54015 (90105–08076), 09330–00021, 09950–50013 (09951–05010, 09952–05010, 09953–05020, 09954–05031)



cardiagn.com

**56. REMOVE IDLER PULLEY SUB–ASSY (See page 14–307)**
**57. REMOVE TIMING BELT NO.2 COVER (See page 14–307)**
**58. REMOVE TIMING BELT NO.1 COVER (See page 14–307)**
**59. REMOVE TIMING BELT GUIDE**
**60. REMOVE TRANSVERSE ENGINE ENGINE MOUNTING BRACKET (See page 14–307)**
**61. SET NO. 1 CYLINDER TO TDC/COMPRESSION (See page 14–307)**
**62. REMOVE TIMING BELT (See page 14–307)**

HINT:
If re–use the timing belt, draw an arrow which indicates the engine revolution direction on the belt and put match marks on the pulleys and the belt before removing. This operation will be very helpful when re–installing the timing belt.

**63. REMOVE GENERATOR ASSY**
**64. REMOVE GENERATOR BRACKET NO.1**
(a) Remove the 2 bolts and the generator bracket.
**65. REMOVE V–RIBBED BELT TENSIONER ASSY**

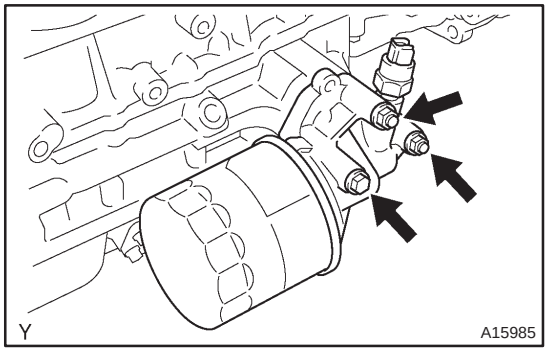


**66. REMOVE OIL FILTER BRACKET SUB–ASSY**
(a) Remove the bolt and 2 nuts, and then remove the oil filter bracket and the gasket.

**67. REMOVE TURBO INSULATOR NO.2 (See page 13–11)**
**68. REMOVE TURBO INSULATOR NO.1 (See page 13–11)**
**69. REMOVE EXHAUST MANIFOLD HEAT INSULATOR NO.2 (See page 13–11)**
**70. REMOVE MANIFOLD STAY NO.2 (See page 13–11)**
**71. REMOVE MANIFOLD STAY (See page 13–11)**
**72. REMOVE EXHAUST MANIFOLD CONVERTER SUB–ASSY (See page 13–11)**
**73. REMOVE TURBOCHARGER STAY (See page 13–11)**
**74. DISCONNECT TURBO WATER HOSE NO.1 (See page 13–11)**
**75. DISCONNECT TURBO WATER HOSE NO.2 (See page 13–11)**
**76. SEPARATE TURBO OIL INLET PIPE SUB–ASSY (See page 13–11)**
**77. REMOVE TURBO OIL OUTLET PIPE NO.2 (See page 13–11)**
**78. REMOVE TURBOCHARGER SUB–ASSY (See page 13–11)**

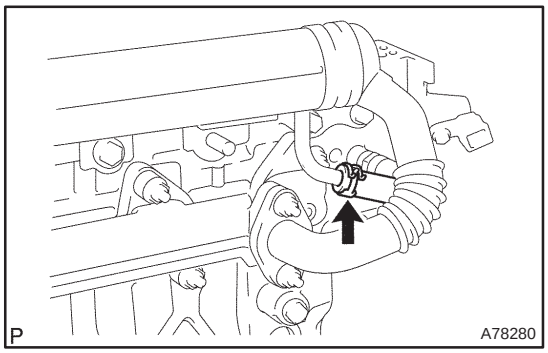


**79. DISCONNECT WATER BY–PASS HOSE NO.3**

cardiagn.com

**80. REMOVE EGR PIPE SUB–ASSY NO.1**

(a) Remove the bolt and 4 nut, and then detach the EGR pipe and the 2 gaskets.

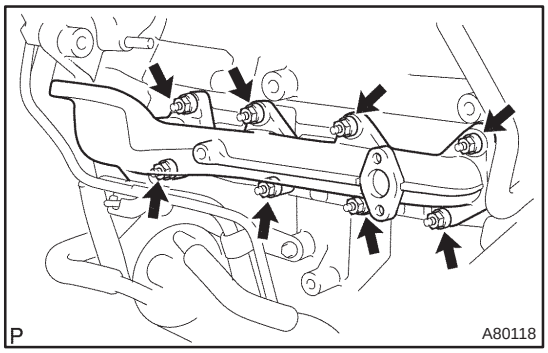


**81. REMOVE EXHAUST MANIFOLD**

(a) Remove the 8 nuts, the exhaust manifold and the gasket.

**82. REMOVE OIL COOLER ASSY (See page 17–32)**

**83. REMOVE WATER OUTLET SUB–ASSY**

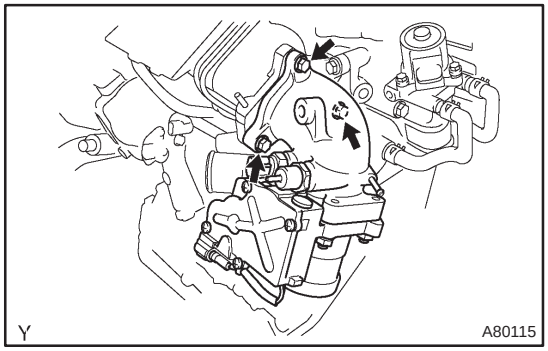


**84. REMOVE INTAKE AIR CONNECTOR SUB–ASSY**

(a) Remove the bolt and 2 nuts, and then remove the intake air connector and the gasket.

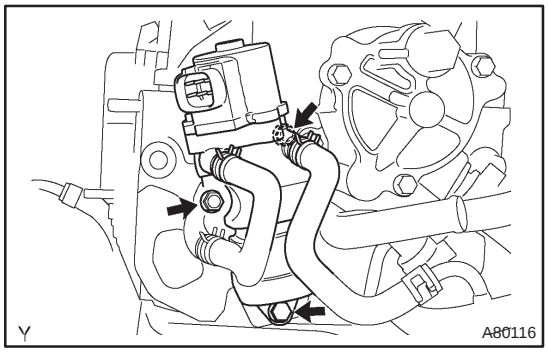


**85. REMOVE EGR VALVE ASSY**

(a) Remove the bolt and 2 nuts, and then remove the EGR valve and the gasket.

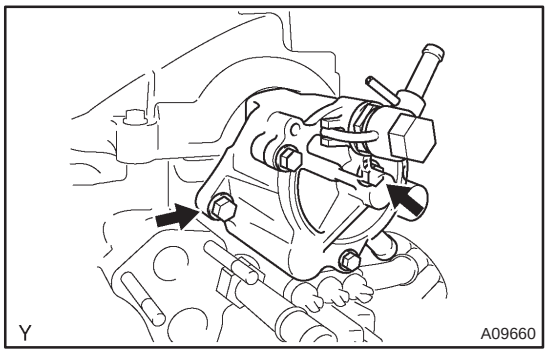


**86. REMOVE VACUUM PUMP ASSY**

(a) Remove the 2 bolts, the vacuum pump and the 2 O–rings.

cardiagn.com

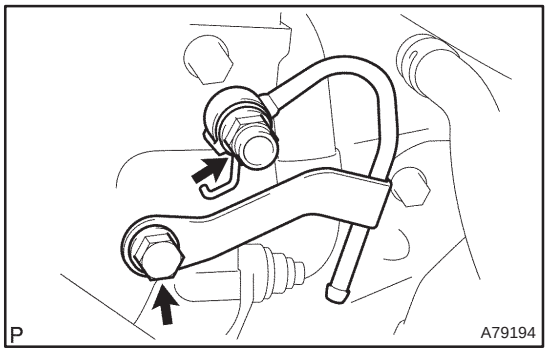


**87. REMOVE NOZZLE LEAKAGE PIPE NO.2**

(a) Remove the check valve and bolt, and then detach the leakage pipe and the gasket.

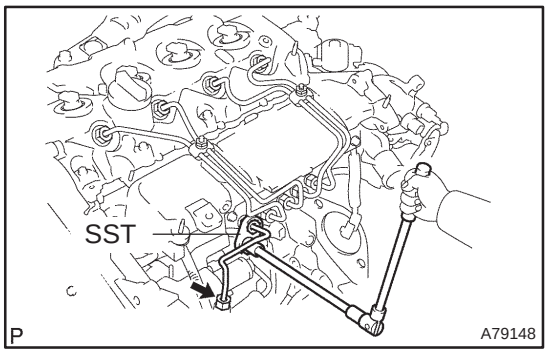


**88. REMOVE FUEL INLET PIPE SUB–ASSY**

(a) Using SST, remove the fuel inlet pipe from the common rail side.
SST 09023–12700

(b) Using SST, remove the fuel inlet pipe from the pump side.
SST 09023–12700

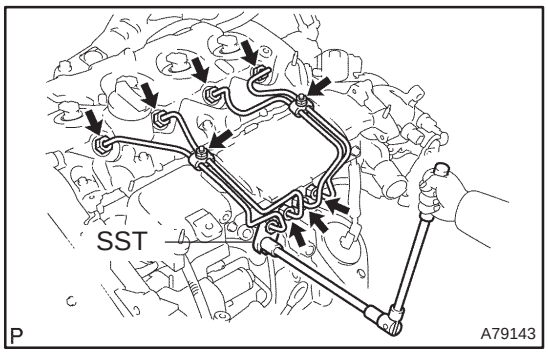


**89. REMOVE INJECTION PIPE SUB–ASSY NO.1**

(a) Remove the 2 nuts and 2 upper infection pipe clamps from the intake manifold.

(b) Using SST, remove the injection pipe from the common rail side.
SST 09023–12700

(c) Using SST, remove the injection pipe from the injector side.
SST 09023–12700

(d) After removing the fuel pipe, to prevent dust or foreign objects being introduces, cover the common rail with vinyl tape and protect the injector inlet with a vinyl or a plastic bag.

(e) Remove the 2 lower injection pipe clamps from the intake manifold.

**90. REMOVE INJECTION PIPE SUB–ASSY NO.2**
SST 09023–12700

HINT:
Perform the same procedures as injection pipe No. 1.

**91. REMOVE INJECTION PIPE SUB–ASSY NO.3**
SST 09023–12700

HINT:
Perform the same procedures as injection pipe No. 1.

**92. REMOVE INJECTION PIPE SUB–ASSY NO.4**
SST 09023–12700

HINT:
Perform the same procedures as injection pipe No. 1.

cardiagn.com

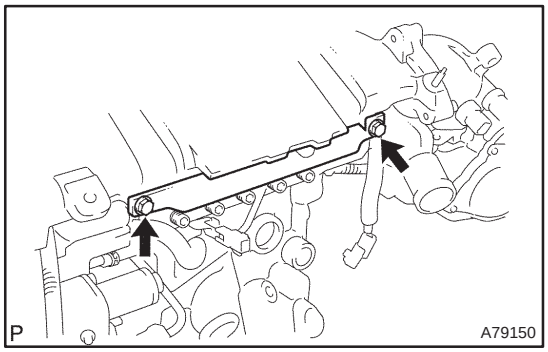


**93. REMOVE INTAKE MANIFOLD INSULATOR NO.1**

(a) Remove the 2 bolts and the intake manifold insulator.

**94. REMOVE COMMON RAIL ASSY (See page 11–78)**

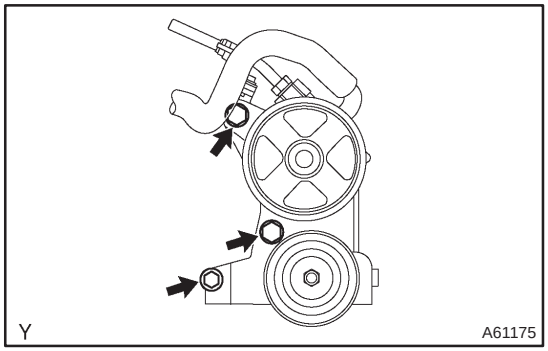


**95. REMOVE POWER STEERING IDLE PULLEY BRACKET**

(a) Remove the 3 bolts and the idle pulley bracket.

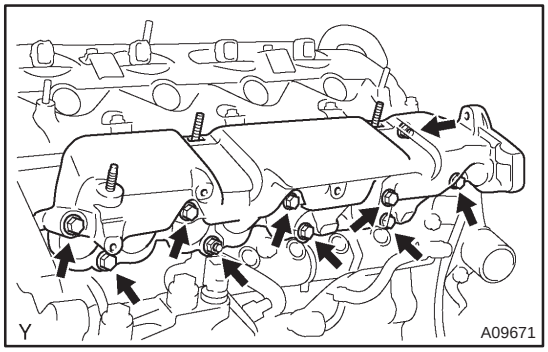


**96. REMOVE INTAKE MANIFOLD**

(a) Remove the 2 bolts and the wiring harness clamp bracket.

(b) Remove the 8 bolts and 2 nuts, and then remove the intake manifold and the gasket.

**97. REMOVE INJECTION PUMP DRIVE PULLEY (See page 11–69)**

SST 09960–10010 (09962–01000, 09963–01000)

**98. REMOVE TIMING BELT NO.3 COVER**

(a) Remove the 2 bolts and 2 seal washers, and then remove the timing belt cover.

**99. REMOVE OIL LEVEL GAGE GUIDE (See page 17–22)**

**100. REMOVE INJECTION OR SUPPLY PUMP ASSY (See page 11–69)**

**101. REMOVE COMPRESSOR MOUNTING BRACKET NO.1**

(a) Remove the 4 bolts and the compressor mounting bracket.

**102. REMOVE WATER INLET**

(a) Remove the 2 bolts and the water inlet.

**103. REMOVE THERMOSTAT**

**104. REMOVE OIL COOLER PIPE**

(a) Remove the union bolt, the oil cooler pipe and the gasket.

**105. REMOVE FUEL FILTER TO INJECTION PUMP FUEL PIPE**

(a) Remove the 3 bolts and nut, and then detach the fuel pipe.



cardiagn.com

**106. REMOVE CRANKSHAFT POSITION SENSOR**

(a) Remove the bolt and the crankshaft position sensor.

**107. REMOVE CAMSHAFT POSITION SENSOR**

(a) Remove the bolt and the camshaft position sensor.

**108. REMOVE ENGINE COOLANT TEMPERATURE SENSOR**

**109. REPLACE PARTIAL ENGINE ASSY**

**110. INSTALL ENGINE COOLANT TEMPERATURE SENSOR**
**Torque: 20 N·m (204 kgf·cm, 15 ft·lbf)**

**111. INSTALL CAMSHAFT POSITION SENSOR**
**Torque: 8.8 N·m (90 kgf·cm, 78 in.·lbf)**

**112. INSTALL CRANKSHAFT POSITION SENSOR**
**Torque: 8.8 N·m (90 kgf·cm, 78 in.·lbf)**

**113. INSTALL FUEL FILTER TO INJECTION PUMP FUEL PIPE**
**Torque:**
**8.8 N·m (90 kgf·cm, 78 ft·lbf) for M6 and Nut**
**21 N·m (209 kgf·cm, 15 ft·lbf) for M8**

**114. INSTALL OIL COOLER PIPE**

(a) Install 2 new gaskets and the oil cooler pipe with the union bolt.
**Torque: 59 N·m (600 kgf·cm, 43 ft·lbf)**

**115. INSTALL THERMOSTAT (See page 16–50)**

**116. INSTALL WATER INLET (See page 16–50)**

**117. INSTALL COMPRESSOR MOUNTING BRACKET NO.1**
**Torque: 42 N·m (428 kgf·cm, 31 ft·lbf)**

**118. INSTALL INJECTION OR SUPPLY PUMP ASSY**
**Torque: 21 N·m (214 kgf·cm, 15 ft·lbf)**

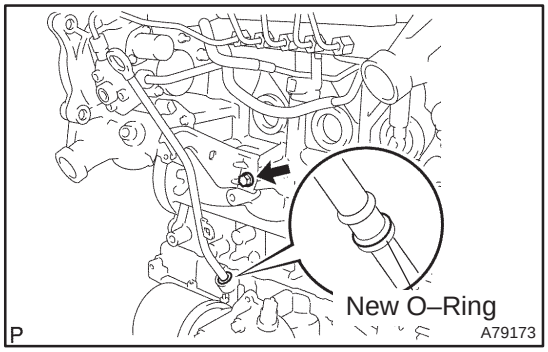


**119. INSTALL OIL LEVEL GAGE GUIDE**

(a) Install a new O–ring to the oil level gage guide.

(b) Apply engine oil to the O–ring.

(c) Push in the oil level gage guide end into the guide hole of the No. 1 oil pan.

(d) Install the oil level gage guide with the bolt.
**Torque: 18 N·m (184 kgf·cm, 13 ft·lbf)**

(e) Apply engine oil to the O–ring on the oil level gage.

(f) Install the oil level gage.

**120. INSTALL TIMING BELT NO.3 COVER**
**Torque: 7.4 N·m (75 kgf·cm, 65 in.·lbf)**

**121. INSTALL INJECTION PUMP DRIVE PULLEY (See page 11–69)**
SST 09960–10010 (09962–01000, 09963–01000)

**122. INSTALL INTAKE MANIFOLD**

(a) Install a new gasket and the intake manifold with the 8 bolts and 2 nuts.
**Torque: 21 N·m (214 kgf·cm, 15 ft·lbf)**

(b) Install the wiring harness clamp bracket with the 2 bolts.
**Torque: 3.9 to 6.9 N·m (40 to 70 kgf·cm, 35 to 61 in.·lbf)**

cardiagn.com

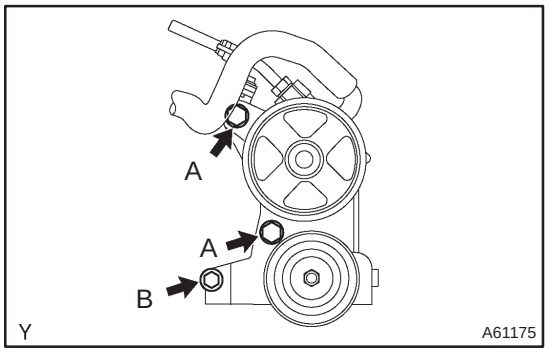


**123. INSTALL POWER STEERING IDLE PULLEY BRACKET**

(a) Install the idle w/ bracket pulley with the 3 bolts.
**Torque:**
**72 N·m (734 kgf·cm, 53 ft·lbf) for bolt A**
**39 N·m (398 kgf·cm, 29 ft·lbf) for bolt B**

**124. INSTALL COMMON RAIL ASSY (See page 11–78)**

**125. INSTALL INTAKE MANIFOLD INSULATOR NO.1**
**Torque: 5.0 N·m (51 kgf·cm, 44 in.·lbf)**

**126. INSTALL INJECTION PIPE SUB–ASSY NO.1**

**NOTICE:**

- **In case of having the injectors replaced, must replace the injection pipes, too.**
- **When assembling the pipes, perform the operation with the engine cold under room temperature.**

(a) Install the 2 lower injection pipe clamps to the intake manifold.

(b) Temporarily install the injection pipe.

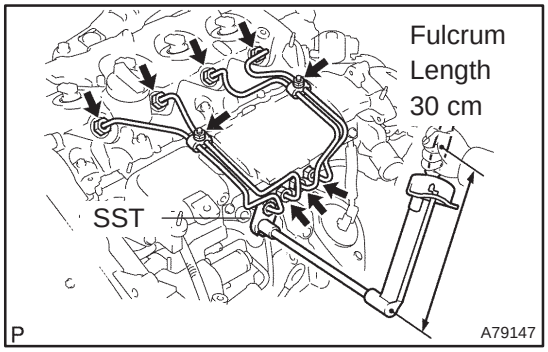


(c) Using SST, tighten the nut of the injection pipe to the common rail side.
SST 09023–12700
**Torque:**
**42 N·m (428 kgf·cm, 31 ft·lbf) for a used pipe using SST**
**46 N·m (469 kgf·cm, 34 ft·lbf) for a used pipe not using SST**
**31 N·m (316 kgf·cm, 23 ft·lbf) for a new pipe using SST**
**34 N·m (347 kgf·cm, 25 ft·lbf) for a new pipe not using SST**

HINT:

- Use a torque wrench with a fulcrum length of 30 cm (11.81 in.)
- Check if the used pipe has deflection or is installed properly after injection pipe is reassembled. If there is deflection or if it can not be installed properly, replace the used pipe with a new pipe.

cardiagn.com

(d) Using SST, tighten the nut of the injection pipe to the injector side.
SST 09023–12700
**Torque:**
**42 N·m (428 kgf·cm, 31 ft·lbf) for a used pipe using SST**
**46 N·m (469 kgf·cm, 34 ft·lbf) for a used pipe not using SST**
**31 N·m (316 kgf·cm, 23 ft·lbf) for a new pipe using SST**
**34 N·m (347 kgf·cm, 25 ft·lbf) for a new pipe not using SST**

HINT:
- Use a torque wrench with a fulcrum length of 30 cm (11.81 in.)
- Check if the used pipe has deflection or is installed properly after injection pipe is reassembled. If there is deflection or if it can not be installed properly, replace the used pipe with a new pipe.

(e) Install the 2 upper injection pipe clamps with the 2 nuts.
**Torque: 5.0 N·m (51 kgf·cm, 44 in.·lbf)**

**127. INSTALL INJECTION PIPE SUB–ASSY NO.2**
SST 09023–12700

HINT:
Perform the same procedures as injection pipe No. 1.

**128. INSTALL INJECTION PIPE SUB–ASSY NO.3**
SST 09023–12700

HINT:
Perform the same procedures as injection pipe No. 1.

**129. INSTALL INJECTION PIPE SUB–ASSY NO.4**
SST 09023–12700

HINT:
Perform the same procedures as injection pipe No. 1.

**130. INSTALL FUEL INLET PIPE SUB–ASSY**

**NOTICE:**
**When assembling the pipe, perform the operation with the engine cold under room temperature.**

(a) Temporarily install the inlet pipe.

cardiagn.com

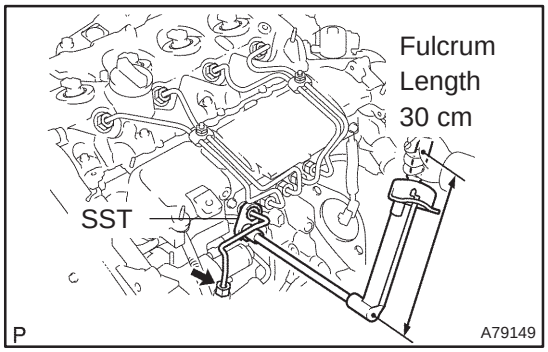


(b) Using SST, tighten the nut of the fuel inlet pipe to the common rail side.
SST 09023–12700
**Torque:**
**42 N·m (428 kgf·cm, 31 ft·lbf) for a used pipe using SST**
**46 N·m (469 kgf·cm, 34 ft·lbf) for a used pipe not using SST**
**31 N·m (316 kgf·cm, 23 ft·lbf) for a new pipe using SST**
**34 N·m (347 kgf·cm, 25 ft·lbf) for a new pipe not using SST**

HINT:
- Use a torque wrench with a fulcrum length of 30 cm (11.81 in.)
- Check if the used pipe has deflection or is installed properly after inlet pipe is reassembled. If there is deflection or if it can not be installed properly, replace the used pipe with a new pipe.

(c) Using SST, tighten the nut of the fuel inlet pipe to the pump side.
SST 09023–12700
**Torque:**
**42 N·m (428 kgf·cm, 31 ft·lbf) for a used pipe using SST**
**46 N·m (469 kgf·cm, 34 ft·lbf) for a used pipe not using SST**
**31 N·m (316 kgf·cm, 23 ft·lbf) for a new pipe using SST**
**34 N·m (347 kgf·cm, 25 ft·lbf) for a new pipe not using SST**

HINT:
- Use a torque wrench with a fulcrum length of 30 cm (11.81 in.)
- Check if the used pipe has deflection or is installed properly after inlet pipe is reassembled. If there is deflection or if it can not be installed properly, replace the used pipe with a new pipe.

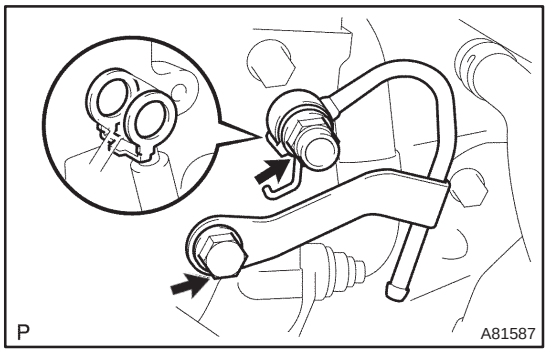


**131. INSTALL NOZZLE LEAKAGE PIPE NO.2**

(a) Install a new gasket and the leakage pipe with the check valve.
**Torque:**
**21 N·m (214 kgf·cm, 15 ft·lbf) for check valve**
**8.8 N·m (90 kgf·cm, 78 in.·lbf) for bolt**

cardiagn.com

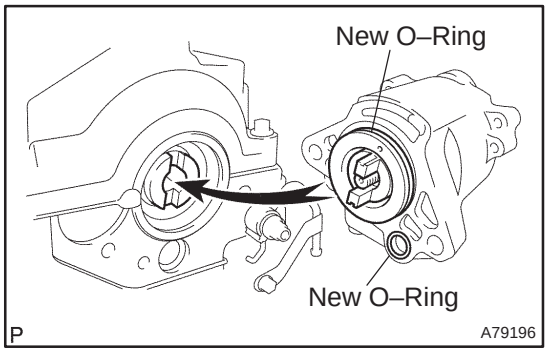


**132. INSTALL VACUUM PUMP ASSY**

(a) Install 2 new O–rings to the vacuum pump.

(b) Align the key of the vacuum pump with the keyway of the exhaust camshaft, insert the vacuum pump into place. Secure the pump with the 2 bolts.
**Torque: 21 N·m (214 kgf·cm, 15 ft·lbf)**

**133. INSTALL EGR VALVE ASSY**

(a) Install a new gasket and the EGR valve with the bolt and 2 nuts.
**Torque: 18 N·m (184 kgf·cm, 13 ft·lbf)**

**134. INSTALL INTAKE AIR CONNECTOR SUB–ASSY**

(a) Install a new gasket and the intake air connector with diesel throttle body with the bolt and 2 nuts.
**Torque: 21 N·m (214 kgf·cm, 15 ft·lbf)**

**135. INSTALL WATER OUTLET SUB–ASSY**

(a) Install a new gasket and the water outlet with the 2 bolts.
**Torque: 21 N·m (214 kgf·cm, 15 ft·lbf)**

**136. INSTALL OIL COOLER ASSY (See page 17–32)**

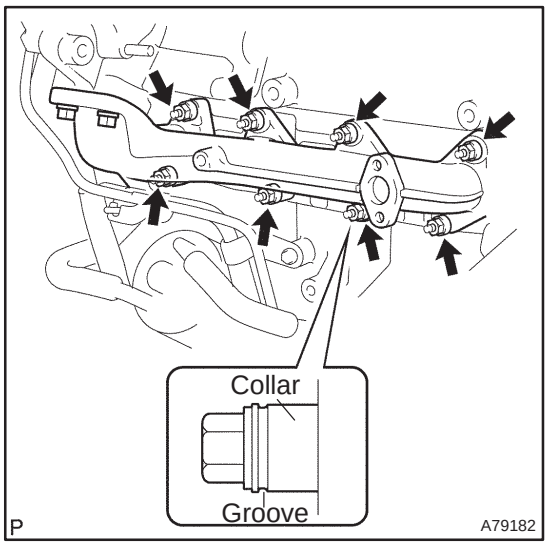


**137. INSTALL EXHAUST MANIFOLD**

(a) Install a new gasket, the exhaust manifold and the 8 collars with new 8 nuts.
**Torque: 47 N·m (479 kgf·cm, 35 ft·lbf)**

HINT:
When installing the collars, pay attention to the mounting orientation. Ring groove of the collar should be outside. Refer to the illustration on the left.

**138. INSTALL EGR PIPE SUB–ASSY NO.1**

(a) Install 2 new gaskets and the EGR pipe with the bolt and 4 new nuts.
**Torque:**
**37 N·m (375 kgf·cm, 27 ft·lbf) for bolt**
**25 N·m (250 kgf·cm, 18 ft·lbf) for nut**

**139. INSTALL TURBOCHARGER SUB–ASSY (See page 13–11)**

**140. INSTALL TURBO OIL INLET PIPE SUB–ASSY (See page 13–11)**

**141. INSTALL TURBOCHARGER STAY (See page 13–11)**

**142. INSTALL EXHAUST MANIFOLD CONVERTER SUB–ASSY (See page 13–11)**

**143. INSTALL MANIFOLD STAY NO.2 (See page 13–11)**

**144. INSTALL EXHAUST MANIFOLD HEAT INSULATOR NO.2 (See page 13–11)**

**145. INSTALL TURBO INSULATOR NO.1 (See page 13–11)**

**146. INSTALL TURBO INSULATOR NO.2 (See page 13–11)**

cardiagn.com

**147. INSTALL OIL FILTER BRACKET SUB–ASSY**

(a) Install a new gasket and oil filter bracket with the bolt and 2 nuts.
**Torque: 34 N·m (347 kgf·cm, 25 ft·lbf)**

**148. INSTALL V–RIBBED BELT TENSIONER ASSY**
**Torque: 31 N·m (316 kgf·cm, 23 ft·lbf)**

**149. INSTALL GENERATOR BRACKET NO.1**
**Torque: 37 N·m (377 kgf·cm, 27 ft·lbf)**

**150. INSTALL GENERATOR ASSY (See page 19–29)**

**151. SET NO. 1 CYLINDER TO TDC/COMPRESSION (See page 14–307)**
SST 09960–10010 (09962–01000, 09963–01000)

**152. INSTALL TIMING BELT (See page 14–307)**

**153. CHECK VALVE TIMING (See page 14–307)**

**154. INSTALL TRANSVERSE ENGINE ENGINE MOUNTING BRACKET (See page 14–307)**

**155. INSTALL TIMING BELT GUIDE (See page 14–307)**

**156. INSTALL TIMING BELT NO.1 COVER (See page 14–307)**

**157. INSTALL TIMING BELT NO.2 COVER (See page 14–307)**

**158. INSTALL IDLER PULLEY SUB–ASSY**
**Torque: 40 N·m (408 kgf·cm, 30 ft·lbf)**

**159. INSTALL CRANKSHAFT PULLEY (See page 14–307)**
SST 09213–54015 (90105–08076), 09330–00021

**160. INSTALL GLOW PLUG ASSY (See page 19–33)**

**161. INSTALL ENGINE MOUNTING BRACKET RR**
**Torque: 64 N·m (653 kgf·cm, 47 ft·lbf)**

**162. INSTALL ENGINE MOUNTING BRACKET FR**
**Torque: 64 N·m (653 kgf·cm, 47 ft·lbf)**

**163. INSTALL DRIVE SHAFT BEARING BRACKET**
**Torque: 64 N·m (653 kgf·cm, 47 ft·lbf)**

**164. INSTALL REAR END PLATE**
**Torque: 8.4 N·m (86 kgf·cm, 74 in.·lbf)**

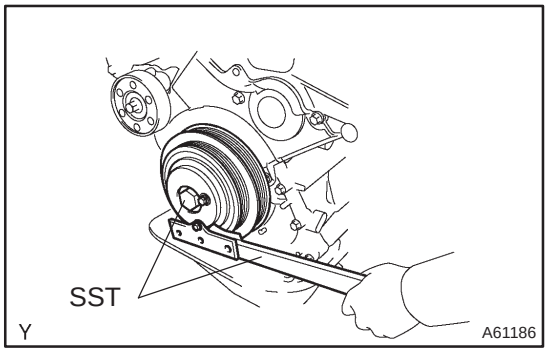


**165. INSTALL FLYWHEEL SUB–ASSY**

(a) Using SST, hold the crankshaft.
SST 09213–54015 (90105–08076), 09330–00021

(b) Clean the bolts and its bolt holes.

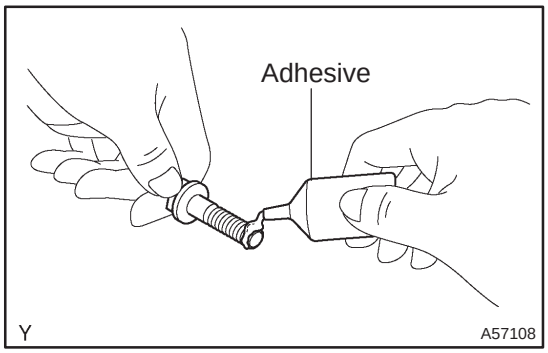


(c) Apply adhesive to 2 or 3 threads of the bolt end.
**Adhesive: Part No. 08833–00070, THREE BOND 1324 or equivalent**



cardiagn.com

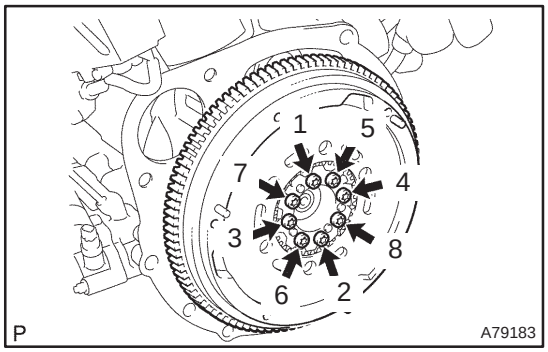


(d) Using several steps, install and tighten the 8 screws with a torx socket wrench (T55) uniformly in the sequence shown in the illustration.
**Torque: 71 N·m (720 kgf·cm, 52 ft·lbf)**

**166. INSTALL CLUTCH DISC ASSY (See page 42–26)**
SST 09301–00210
**167. INSTALL MANUAL TRANSAXLE (See page 41–33)**
**168. INSTALL STARTER ASSY (See page 19–24)**

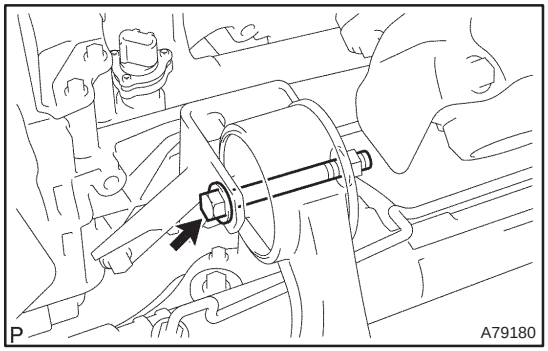


**169. INSTALL FRONT SUSPENSION CROSSMEMBER SUB–ASSY**
(a) Attach the engine and the transaxle assembly to the suspension crossmember and engine mounting member.
(b) Install the bolt which is used to secure the rear engine mounting bracket to the mounting insulator.
**Torque: 87 N·m (887 kgf·cm, 64 ft·lbf)**

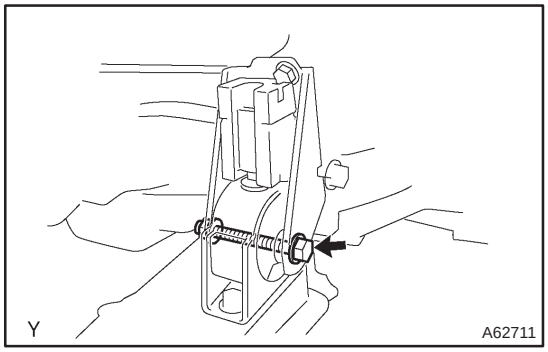


(c) Install the bolt which is used to secure the front engine mounting bracket to the mounting insulator.
**Torque: 52 N·m (530 kgf·cm, 38 ft·lbf)**
**170. INSTALL ENGINE ASSEMBLY WITH TRANSAXLE**
(a) Set the engine assembly with transaxle on the engine lifter.

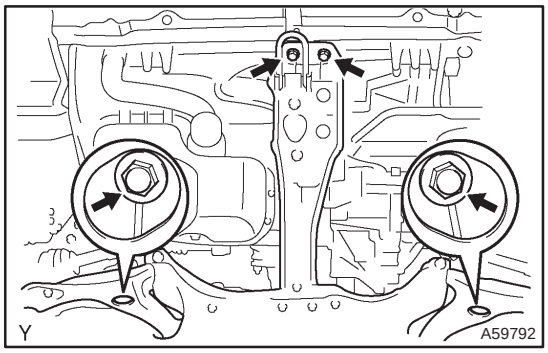


(b) Temporarily, install the suspension crossmember with the 2 bolts and 2 nuts.
(c) Install the engine mounting insulator LH.
**Torque: 80 N·m (816 kgf·cm, 59 ft·lbf)**
(d) Install the engine mounting insulator RH.
**Torque: 52 N·m (530 kgf·cm, 38 ft·lbf)**

cardiagn.com

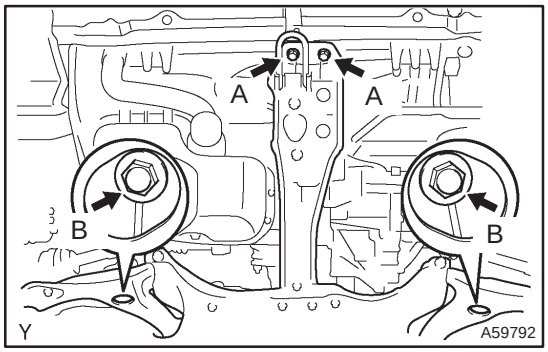


(e) Install the front suspension crossmember with the 2 bolts and 2 nuts.
**Torque:**
**45 N·m (459 kgf·cm, 33 ft·lbf) for bolt A**
**133 N·m (1,356 kgf·cm, 98 ft·lbf) for nut B**

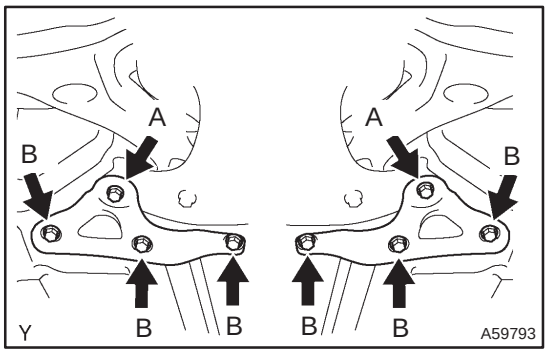


(f) Install the front suspension member brace LH and RH with the 8 bolts.
**Torque:**
**133 N·m (1,356 kgf·cm, 98 ft·lbf) for bolt A**
**80 N·m (816 kgf·cm, 59 ft·lbf) for nut B**

**NOTICE:**
**After installing the crossmember, check that the positioning holes on the crossmember and the vehicle are aligned.**

**171. INSTALL FRONT DRIVE SHAFT ASSY LH (See page 30–6)**
HINT:
Perform the same procedure as above on the opposite side.
**172. INSTALL FRONT SUSPENSION ARM SUB–ASSY LOWER NO.1 LH (See page 26–21)**
HINT:
Perform the same procedure as above on the opposite side.
**173. INSTALL STEERING INTERMEDIATE SHAFT ASSY NO.2 (See page 51–36)**
**174. INSTALL FRONT STABILIZER LINK ASSY LH (See page 26–26)**
HINT:
Perform the same procedure as above on the opposite side.
SST 99999–70037
**175. INSTALL TIE ROD END SUB–ASSY LH (See page 30–6)**
HINT:
Perform the same procedure as above on the opposite side.
**176. INSTALL FRONT AXLE HUB LH NUT (See page 30–6)**
HINT:
Perform the same procedure as above on the opposite side.
**177. INSTALL RETURN TUBE SUB–ASSY**
**Torque: 8.0 N·m (82 kgf·cm, 71 in.·lbf)**
**178. INSTALL EXHAUST PIPE ASSY FRONT (See page 15–10)**
**179. INSTALL FLOOR PANEL BRACE FRONT (See page 15–10)**
**180. INSTALL COMPRESSOR AND MAGNETIC CLUTCH (W/ AIR CONDITIONING) (See page 55–86)**
**181. ADJUST V (COOLER COMPRESSOR TO CRANKSHAFT PULLEY) BELT NO.1 (See page 14–269 )**
**182. INSTALL CLUTCH RELEASE CYLINDER ASSY (See page 42–17)**
**183. INSTALL CLUTCH ACCUMULATOR ASSY (See page 42–17)**
SST 09023–00100

cardiagn.com

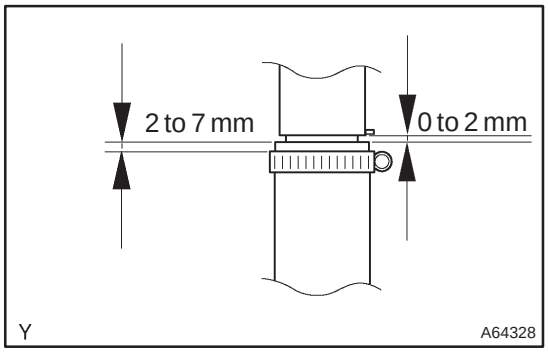


**184. INSTALL AIR TUBE NO.1**

(a) Install the new air hose No. 1 and new hose clamp as shown in the illustration.

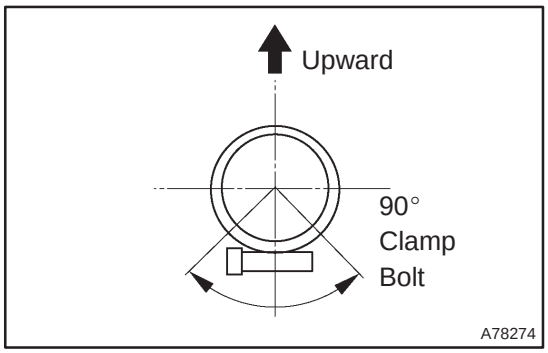


(b) Tighten the hose clamp as shown in the illustration.
**Torque: 6.0 N·m (61 kgf·cm, 53 in.·lbf)**

(c) Install the air tube No. 1 with the 3 bolts and nut.
**Torque: 25 N·m (255 kgf·cm, 18 ft·lbf)**

**185. INSTALL INJECTOR DRIVER**
**Torque: 5.0 N·m (51 kgf·cm, 44 in.·lbf)**

**186. CONNECT ENGINE WIRE**
**Torque: 8.4 N·m (85 kgf·cm, 74 in.·lbf)**

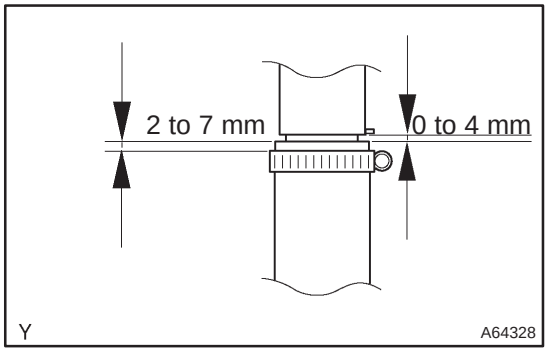


**187. INSTALL AIR TUBE NO.2**

(a) Install the air hose and hose clamps as shown in the illustration.

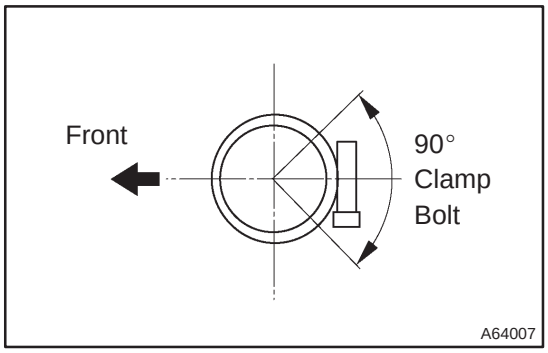


(b) Tighten the hose clamps as shown in the illustration.
**Torque: 6.0 N·m (61 kgf·cm, 53 ft·lbf)**

(c) Install the 2 bolts and the air tube No.2 assy.
**Torque: 25 N·m (255 kgf·cm, 18 ft·lbf)**

**188. INSTALL RADIATOR ASSY (W/ AIR CONDITIONING) (See page 16–51)**

**189. INSTALL ENGINE ROOM RELAY BLOCK NO.3**
**Torque: 5.3 N·m (54 kgf·cm, 46 in.·lbf)**

**190. INSTALL FUEL FILTER ASSY**
**Torque: 18 N·m (178 kgf·cm, 13 ft·lbf)**



cardiagn.com

**191. INSTALL AIR CLEANER ASSY**
**Torque: 7.0 N·m (71 kgf·cm, 62 in.·lbf)**
**192. INSTALL ENGINE COVER NO.1**
**Torque: 8.0 N·m (82 kgf·cm, 71 in.·lbf)**
**193. BLEED CLUTCH PIPE LINE (See page 42–17)**
**194. INSTALL FRONT WHEELS**
**Torque: 103 N·m (1,050 kgf·cm, 76 ft·lbf)**
**195. ADD MANUAL TRANSAXLE OIL**
**196. ADD ENGINE OIL**
**197. ADD ENGINE COOLANT (See page 16–44)**
**198. CHECK CLUTCH FLUID LEAKAGE**
**199. CHECK FLUID LEVEL IN RESERVOIR**
**200. CHECK BRAKE FLUID LEAKAGE**
**201. CHECK FOR ENGINE OIL LEAKS**
**202. CHECK FOR FUEL LEAKS (See page 11–60)**
**203. CHECK FOR ENGINE COOLANT LEAKS (See page 16–44)**
**204. CHECK FOR EXHAUST GAS LEAKS**
**205. INSPECT AND ADJUST FRONT WHEEL ALIGNMENT (See page 26–6)**
**206. INSPECT ENGINE IDLE SPEED (See page 14–266)**
**207. CHECK ABS SPEED SENSOR SIGNAL (See page 05–756)**

cardiagn.com

# PARTIAL ENGINE ASSY (1ZZ–FE/3ZZ–FE)

141CF–01

## COMPONENTS

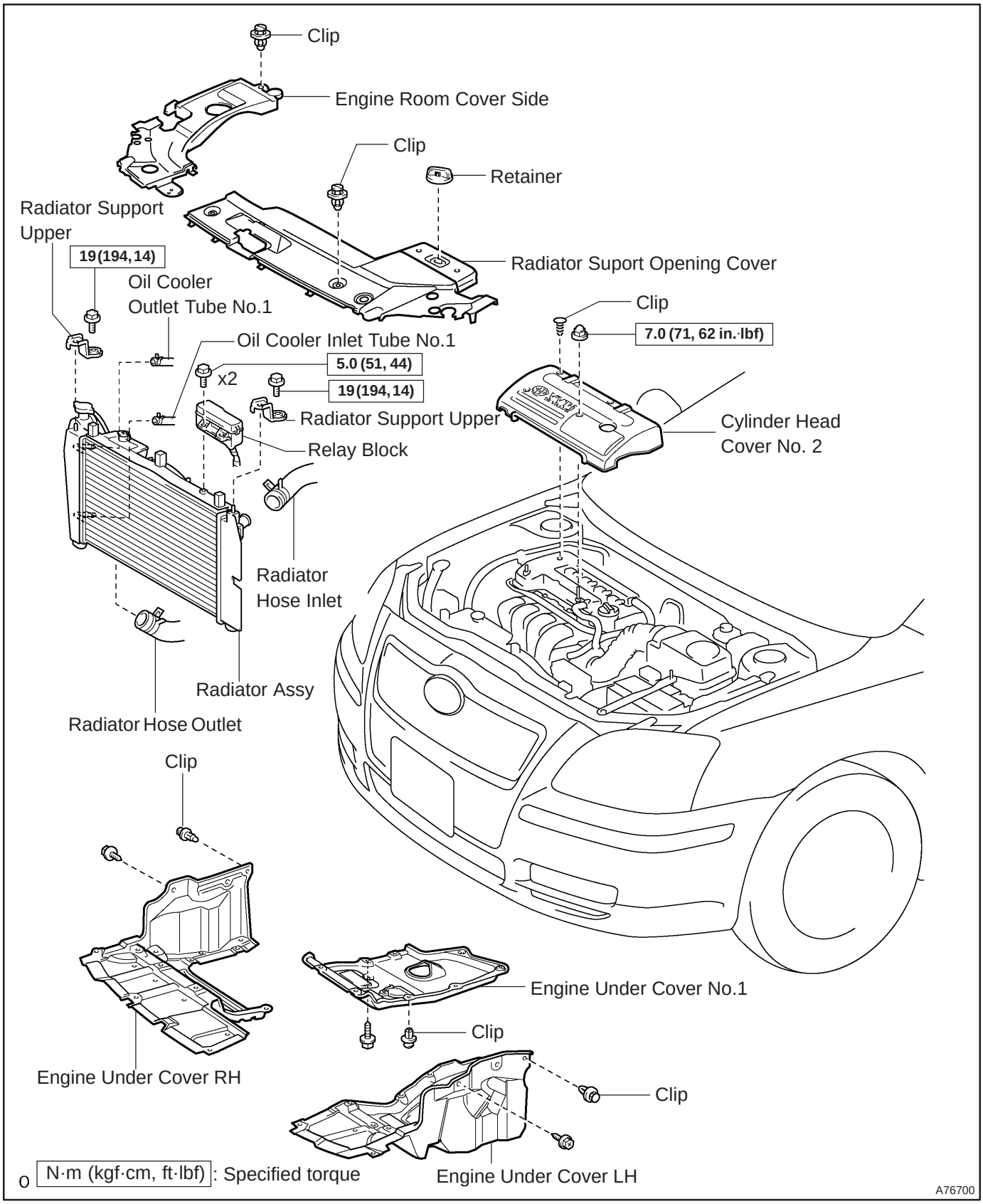


cardiagn.com

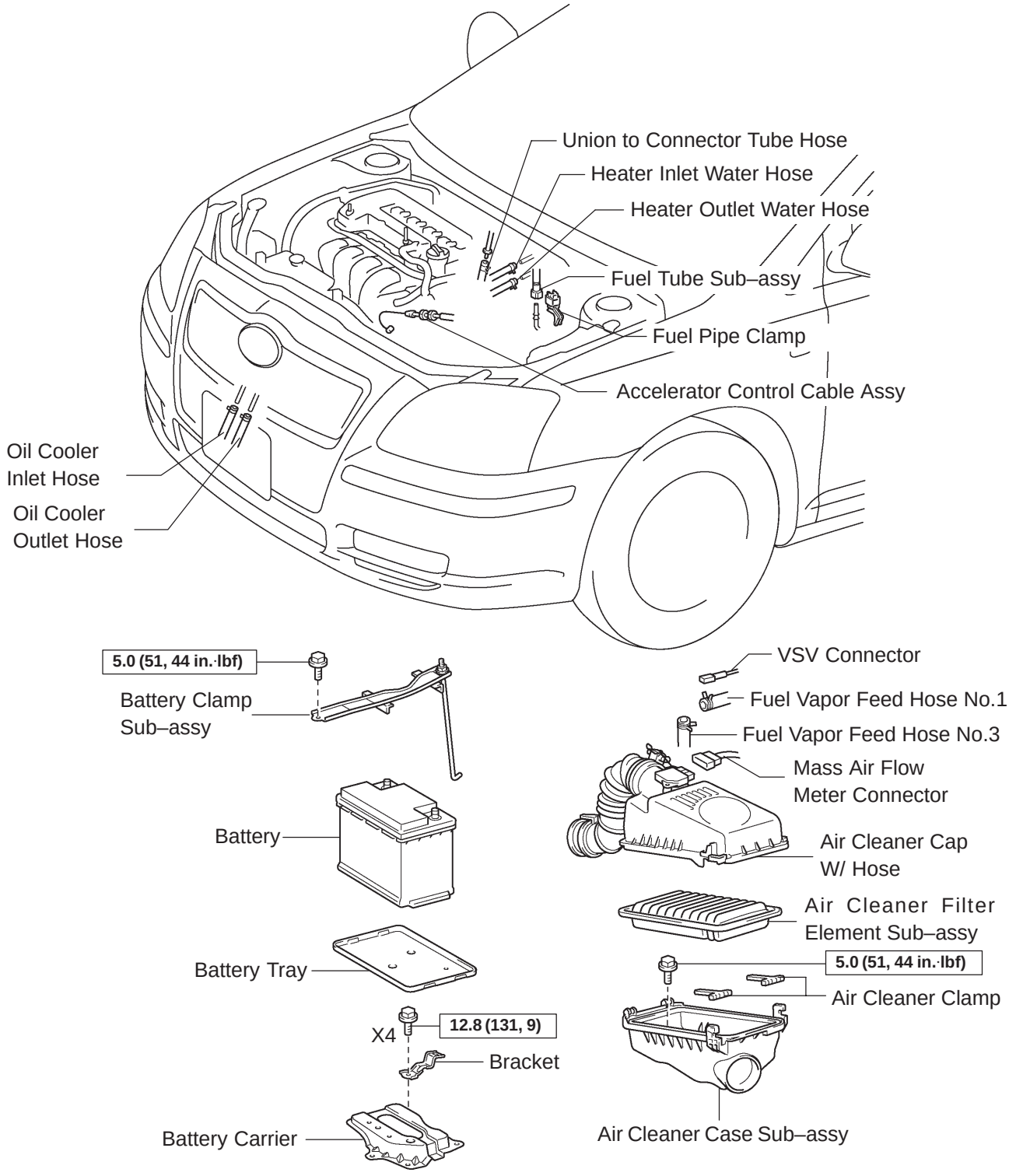


O N·m (kgf·cm, ft·lbf): Specified torque

A76702

cardiagn.com

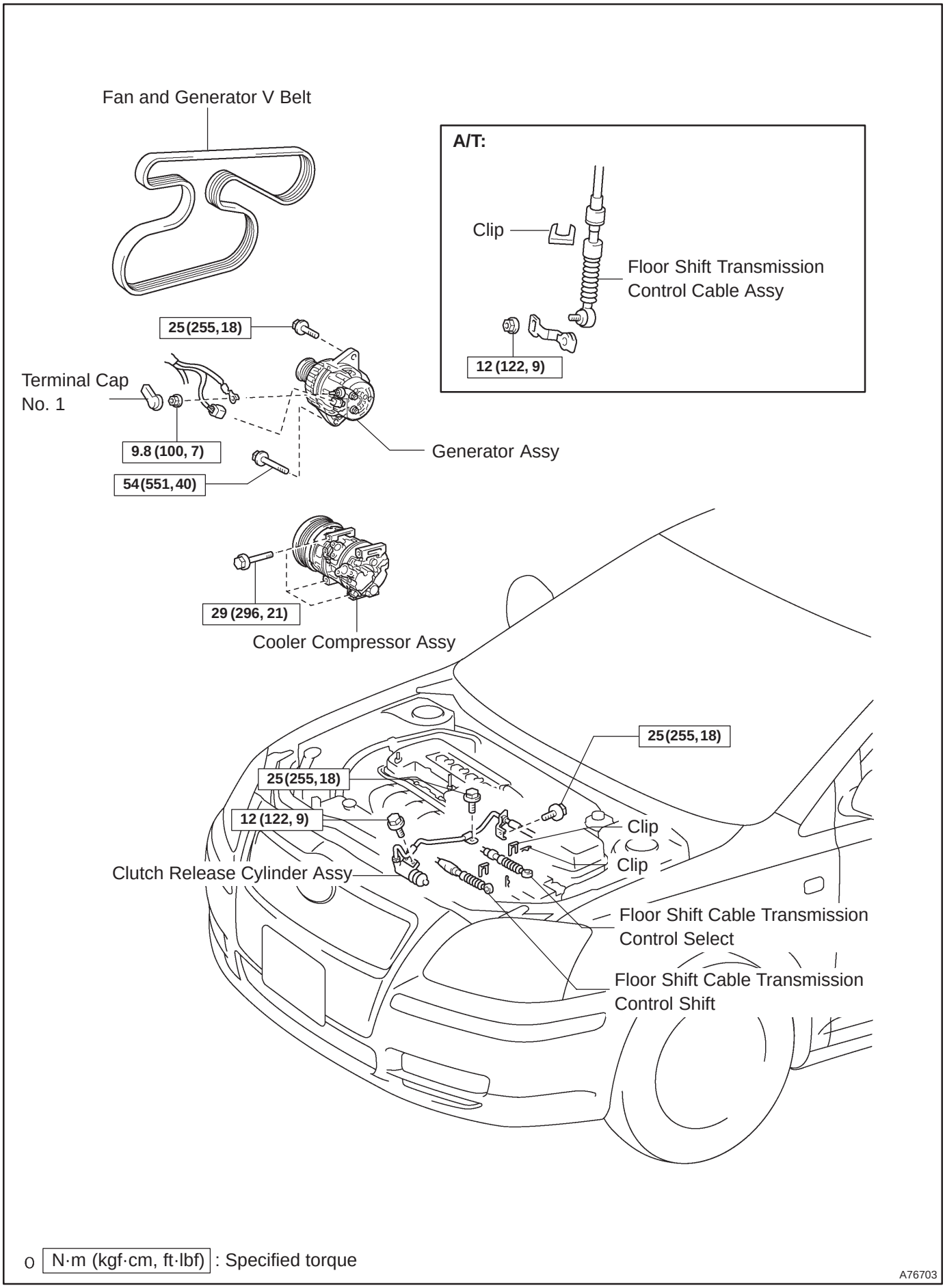


cardiagn.com

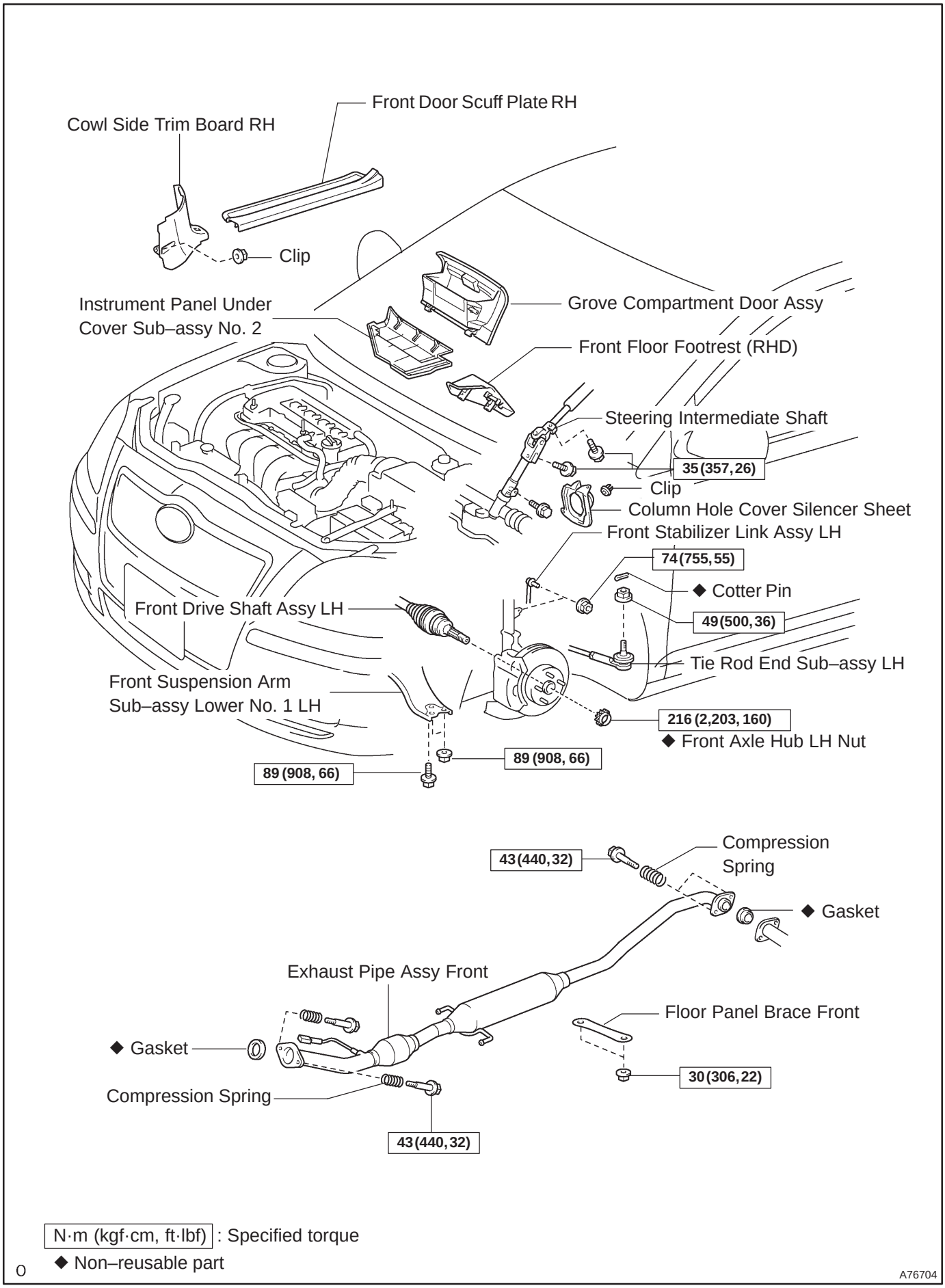


cardiagn.com

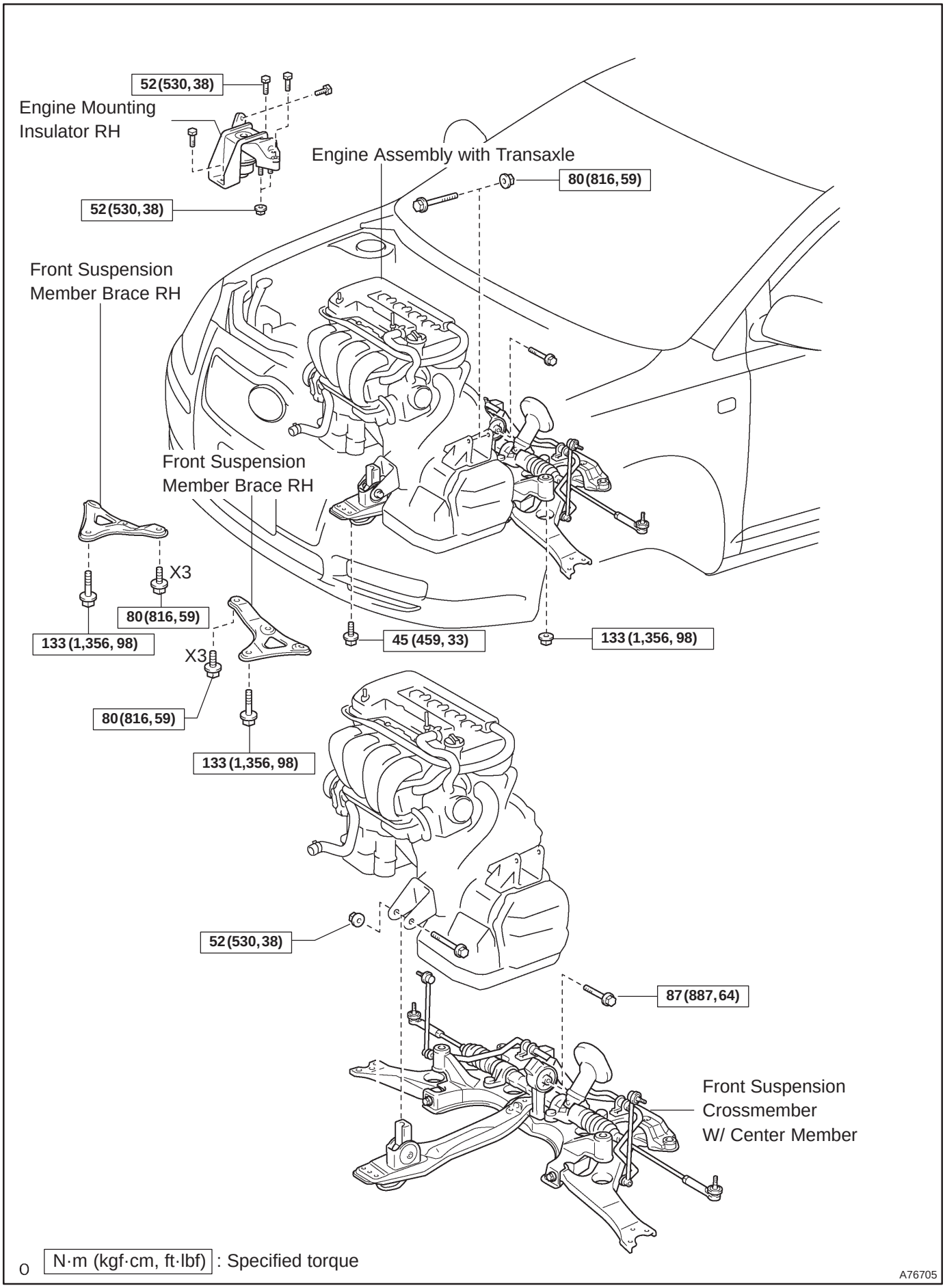


cardiagn.com

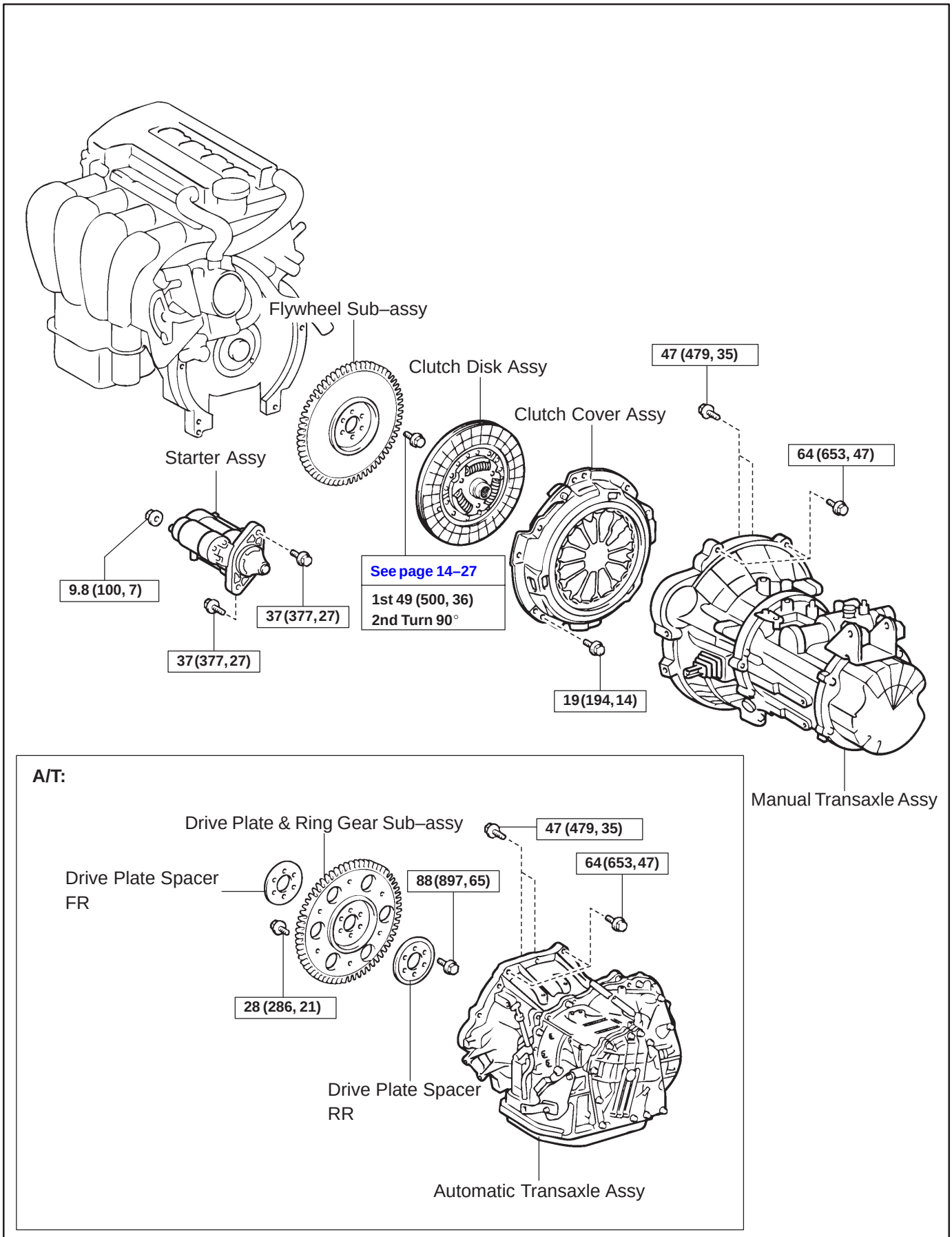


cardiagn.com

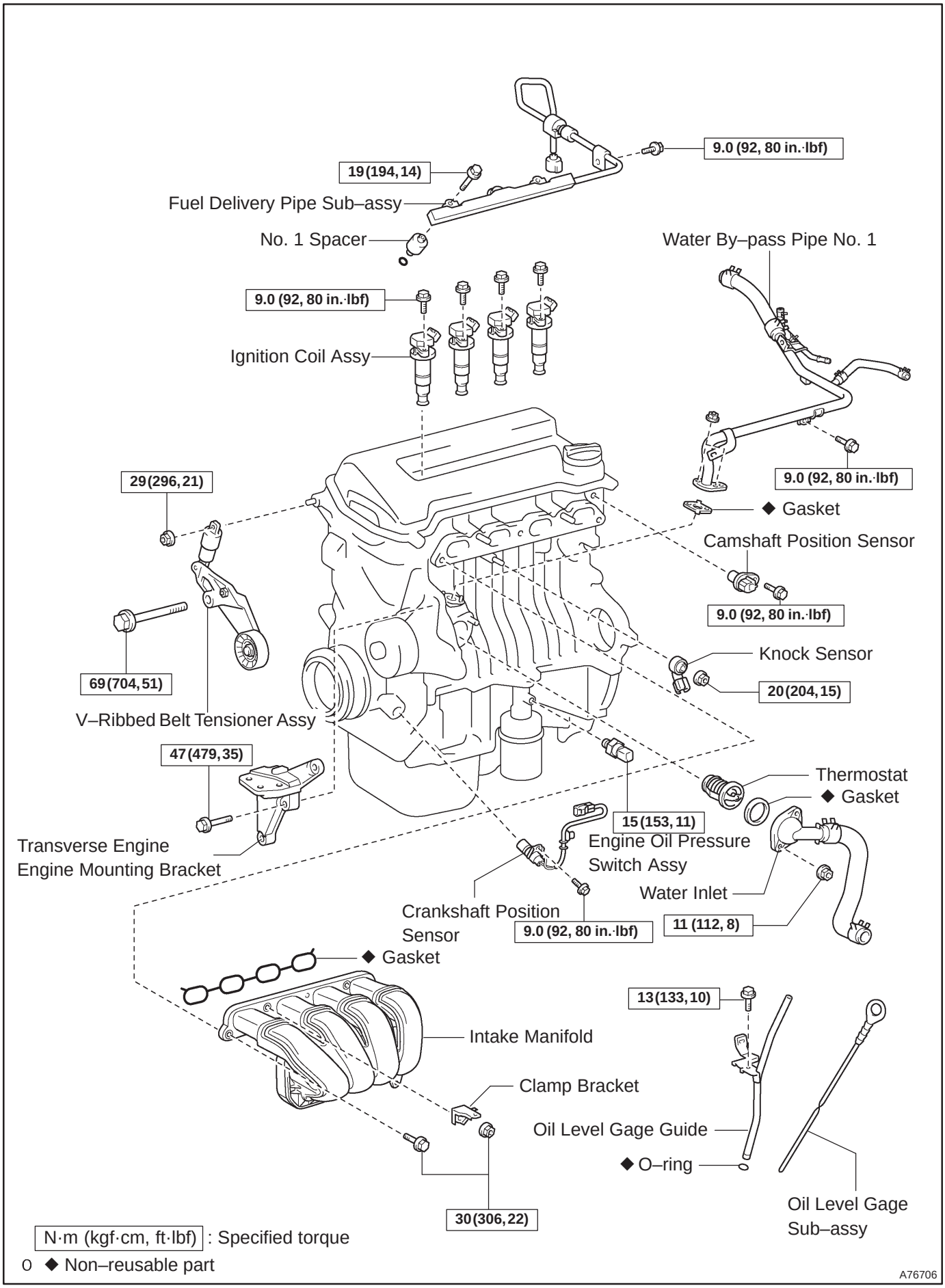


cardiagn.com

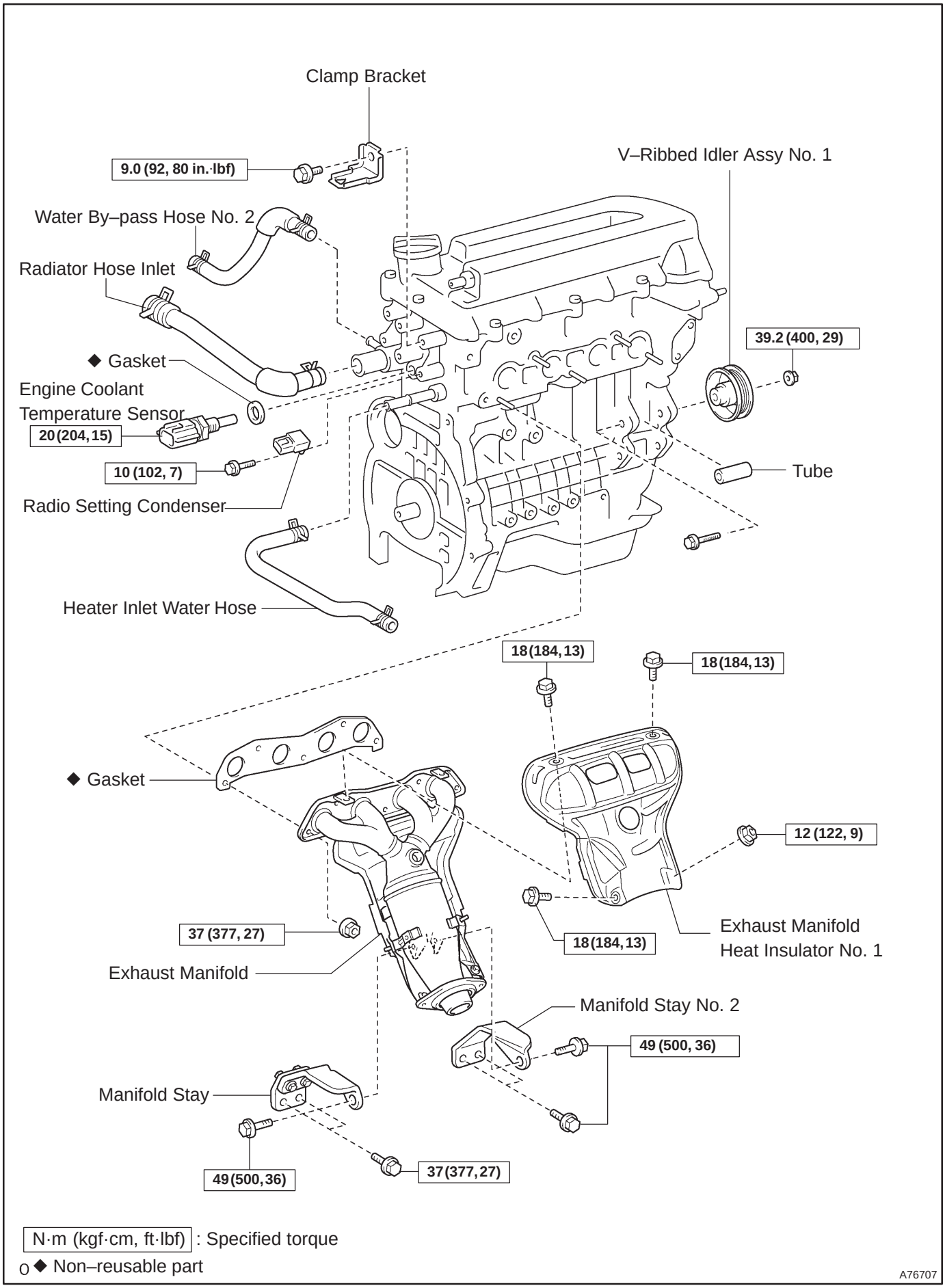


cardiagn.com

141CG–01

# REPLACEMENT

**1. DISCHARGE FUEL SYSTEM PRESSURE** **(See page 11–1)**

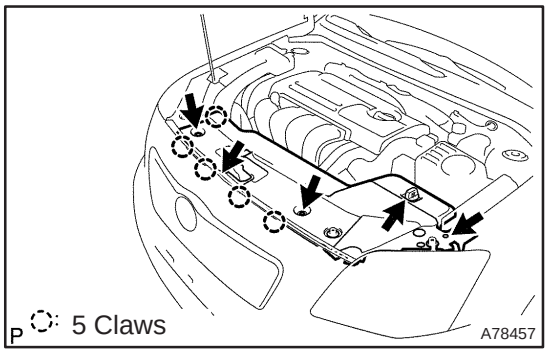


**2. REMOVE RADIATOR SUPPORT OPENING COVER**

(a) Remove the retainer and the 4 clips.

(b) Unfasten the 5 claws, and remove the radiator support opening cover.

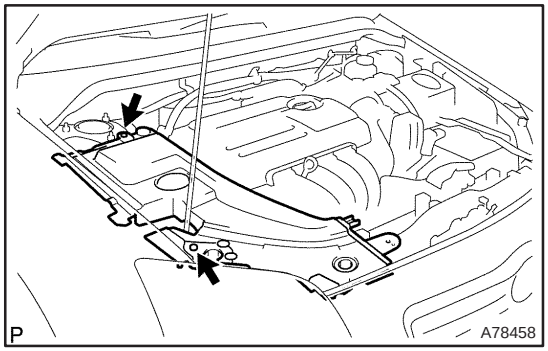


**3. REMOVE ENGINE ROOM COVER SIDE**

(a) Remove the 2 clips and the engine room cover side.

**4. REMOVE FRONT WHEELS**

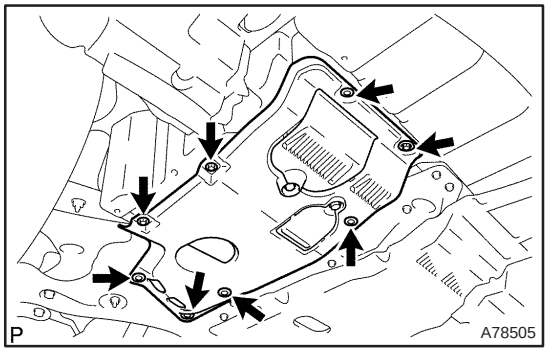


**5. REMOVE ENGINE UNDER COVER SUB–ASSY NO.1**

(a) Remove the 5 clips, 2 screws, bolt and detach the engine under cover.

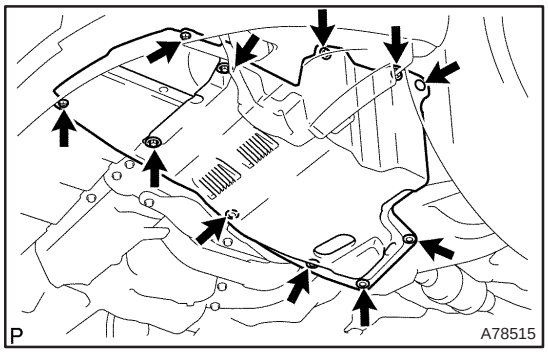


**6. REMOVE ENGINE UNDER COVER LH**

(a) Remove the 6 screws and 5 clips, then detach the engine under cover.

cardiagn.com

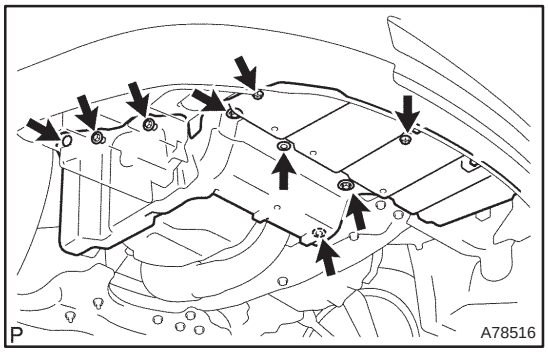


**7. REMOVE ENGINE UNDER COVER RH**

(a) Remove the 6 screws and 3 clips, then detach the engine under cover.

**8. DRAIN ENGINE COOLANT (See page 16–7)**

**9. DRAIN ENGINE OIL**

(a) Install a new gasket and the drain plug after draining engine oil.
**Torque: 37 N·m (377 kgf·cm, 27 ft·lbf)**

**10. DRAIN MANUAL TRANSAXLE OIL (M/T TRANSAXLE) (See page 41–15)**

**11. DRAIN AUTOMATIC TRANSAXLE FLUID (A/T TRANSAXLE) (See page 40–42)**

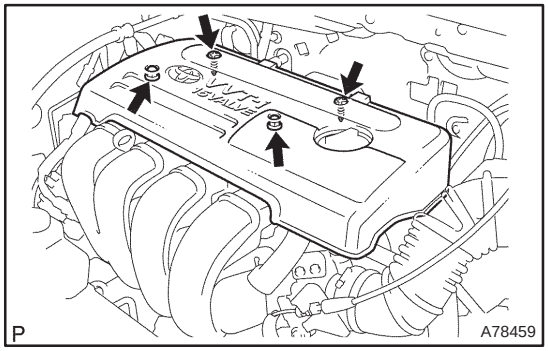


**12. REMOVE CYLINDER HEAD COVER NO.2**

(a) Remove the 2 nuts and 2 clips, then detach cylinder head cover No.2.

**13. REMOVE AIR CLEANER ASSEMBLY WITH HOSE (See page 10–9 or 10–15)**

**14. REMOVE AIR CLEANER FILTER ELEMENT SUB–ASSY**

**15. REMOVE AIR CLEANER CASE SUB–ASSY**

(a) Remove the 3 bolts and the air cleaner case.

**16. DISCONNECT RADIATOR HOSE INLET**

(a) Disconnect the radiator hose inlet from the radiator.

**17. DISCONNECT RADIATOR HOSE OUTLET**

(a) Disconnect the radiator hose outlet from the radiator.

**18. DISCONNECT OIL COOLER INLET TUBE NO.1 (A/T TRANSAXLE)**

(a) Disconnect the oil cooler inlet tube from the radiator.

**19. DISCONNECT OIL COOLER OUTLET TUBE NO.1 (A/T TRANSAXLE)**

(a) Disconnect the oil cooler outlet tube from the radiator.

cardiagn.com

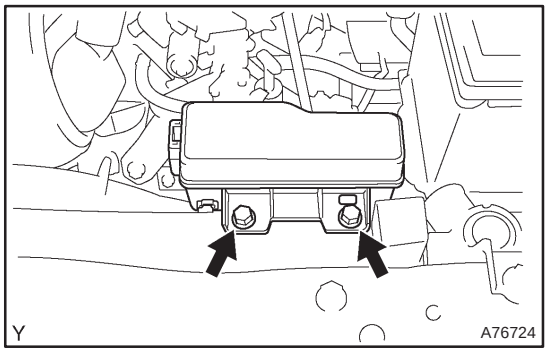


**20. REMOVE RADIATOR ASSY**
(a) Remove the 2 bolts and the relay block.
(b) Disconnect the connector and the 2 harness clamps.
(c) Remove the 2 bolts, the 2 radiator support upper and the radiator.
**21. REMOVE BATTERY**
**22. REMOVE BATTERY TRAY**

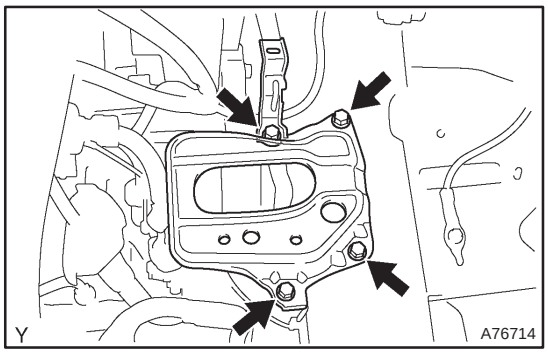


**23. REMOVE BATTERY CARRIER**
(a) Remove the 4 bolts, the battery carrier and the bracket.
**24. REMOVE EFI FUEL PIPE CLAMP (See page 11–11)**
**25. DISCONNECT FUEL TUBE SUB–ASSY (See page 11–11)**

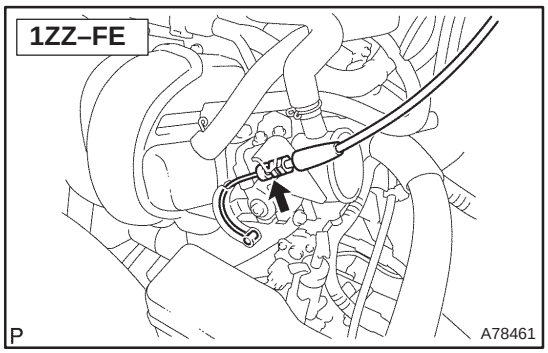


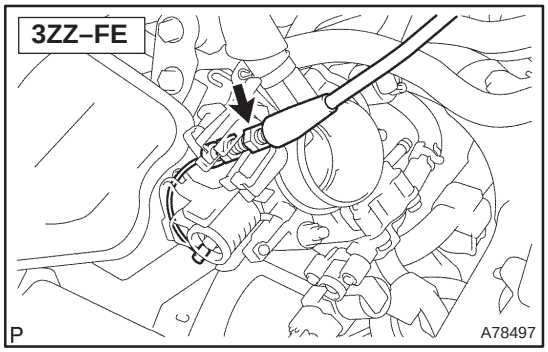


**26. SEPARATE ACCELERATOR CONTROL CABLE ASSY**
(a) Loosen the nut and separate the accelerator control cable.

**27. DISCONNECT UNION TO CONNECTOR TUBE HOSE**
(a) Disconnect the union to connector tube hose.
**28. DISCONNECT HEATER INLET WATER HOSE**
(a) Disconnect the heater inlet water hose from the heater core inlet tube.
**29. DISCONNECT HEATER OUTLET WATER HOSE**
(a) Disconnect the heater outlet water hose from the heater core outlet tube.
**30. DISCONNECT OIL COOLER INLET HOSE (A/T TRANSAXLE)**
(a) Disconnect the oil cooler inlet hose from the automatic transaxle.
**31. DISCONNECT OIL COOLER OUTLET HOSE (A/T TRANSAXLE)**
(a) Disconnect the oil cooler outlet hose from the automatic transaxle.



cardiagn.com

**32. SEPARATE FLOOR SHIFT CABLE TRANSMISSION CONTROL SELECT (M/T TRANSAXLE) (See page 41–15)**

**33. SEPARATE FLOOR SHIFT CABLE TRANSMISSION CONTROL SHIFT (M/T TRANSAXLE) (See page 41–15)**

**34. SEPARATE FLOOR SHIFT CABLE TRANSMISSION CONTROL SHIFT (A/T TRANSAXLE) (See page 40–11)**

**35. SEPARATE CLUTCH RELEASE CYLINDER ASSY (M/T TRANSAXLE) (See page 41–15)**

**36. REMOVE GLOVE COMPARTMENT DOOR ASSY (See page 71–11)**

**37. REMOVE INSTRUMENT PANEL UNDER COVER SUB–ASSY NO.2**

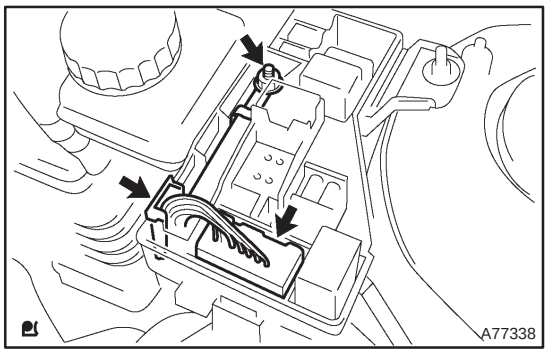


**38. DISCONNECT ENGINE WIRE**

(a) Disconnect the engine wire from the ECM and junction block.

(b) Pull out the engine wire.

(c) Remove the engine room relay block No.2 cover.

(d) Remove a nut and disconnect a connector as shown in the illustration.

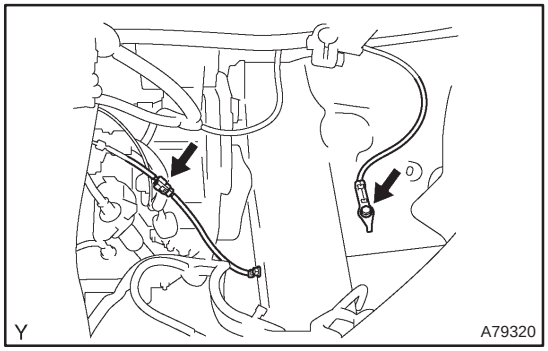


(e) Remove the bolt and disconnect the ground terminal.

(f) Disconnect the ground terminal connector.

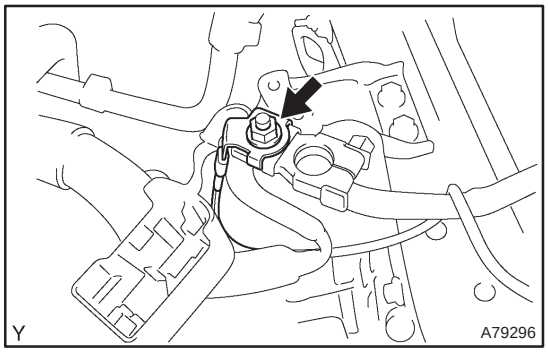


(g) Remove the nut and disconnect the battery terminal B.

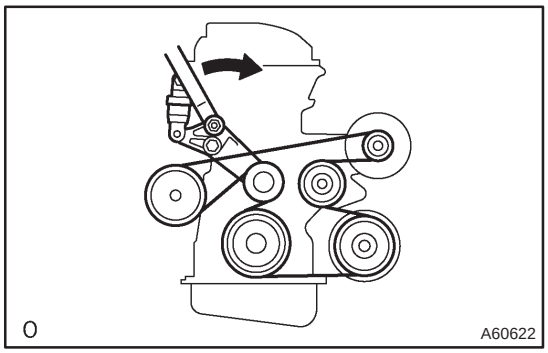


**39. REMOVE FAN AND GENERATOR V BELT**

(a) Turn the V–ribbed belt tensioner clockwise slowly and loosen it. Then, remove the fan and generator V belt and put back the V–ribbed belt tensioner carefully.

cardiagn.com

**40. REMOVE GENERATOR ASSY (See page 19–7)**

**41. SEPARATE COMPRESSOR AND MAGNETIC CLUTCH (W/ AIR CONDITIONING)**

HINT:

- Secure the compressor and hoses off to the side instead of discharging the A/C system.
- 1ZZ–FE (See page 55–74)
- 3ZZ–FE (See page 55–70)

**42. REMOVE COLUMN HOLE COVER SILENCER SHEET**

(a) Remove the 2 clips and the column hole cover silencer sheet.

**43. SEPARATE STEERING INTERMEDIATE SHAFT (See page 50–9)**

**44. REMOVE FRONT DOOR SCUFF PLATE RH (See page 71–11)**

**45. REMOVE COWL SIDE TRIM BOARD RH (See page 71–11)**

**46. REMOVE FRONT FLOOR FOOTREST**

**47. REMOVE FLOOR PANEL BRACE FRONT**

(a) Remove the 2 nuts and the floor panel brace front.

**48. REMOVE EXHAUST PIPE ASSY FRONT (See page 15–2)**

**49. REMOVE FRONT AXLE HUB LH NUT (See page 30–6)**

SST 09930–00010

**50. REMOVE FRONT AXLE HUB RH NUT**

SST 09930–00010

HINT:

Perform the same procedure as above on the opposite side.

**51. SEPARATE TIE ROD END SUB–ASSY LH (See page 30–6)**

SST 09628–62011

**52. SEPARATE TIE ROD END SUB–ASSY RH**

SST 09628–62011

HINT:

Perform the same procedure as above on the opposite side.

**53. SEPARATE FRONT STABILIZER LINK ASSY LH (See page 30–6)**

**54. SEPARATE FRONT STABILIZER LINK ASSY RH**

HINT:

Perform the same procedure as above on the opposite side.

**55. SEPARATE FRONT SUSPENSION ARM SUB–ASSY LOWER NO.1 LH (See page 30–6)**

**56. SEPARATE FRONT SUSPENSION ARM SUB–ASSY LOWER NO.1 RH**

HINT:

Perform the same procedure as above on the opposite side.

**57. SEPARATE FRONT AXLE ASSY LH (See page 30–6)**

**58. SEPARATE FRONT AXLE ASSY RH**

HINT:

Perform the same procedure as above on the opposite side.

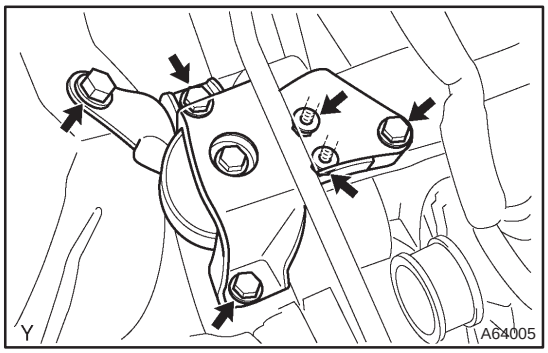


**59. REMOVE ENGINE ASSEMBLY WITH TRANSAXLE**

(a) Set the engine lifter.

(b) Remove the 4 bolts and 2 nuts, and detach the engine mounting insulator.



cardiagn.com

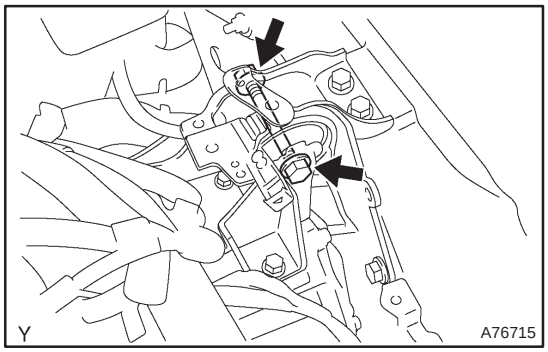


(c) Remove the through bolt and nut, detach the engine mounting insulator from the vehicle.

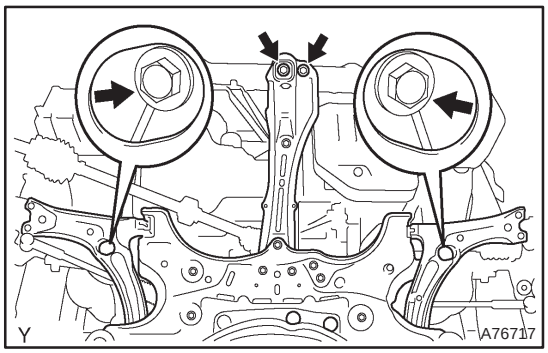


(d) Remove the 2 bolts and 2 nuts as shown in the illustration.

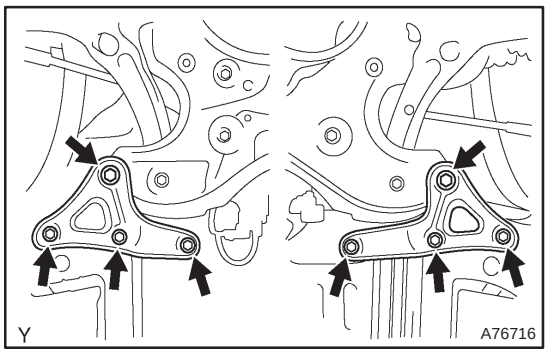


(e) Remove the 8 bolts and the front suspension member brace rear RH and LH.

(f) Carefully remove the engine with transaxle from the engine compartment.

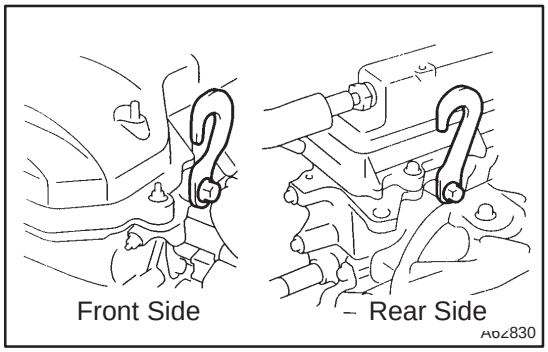


(g) Install the engine hanger No. 1 (12281–15040) and the bolt (91512–B1016).
**Torque: 38 N·m (387 kgf·cm, 28 ft·lbf)**

(h) Install the engine hanger (12281–22021) and the bolt (91512–B1016).
**Torque: 38 N·m (387 kgf·cm, 28 ft·lbf)**

HINT:
Securely install the front engine hanger (12281–22021) and the rear engine hanger No. 1 (12281–15040) to the engine assembly.

(i) Attach the engine sling and hang the engine with the chain block.

cardiagn.com

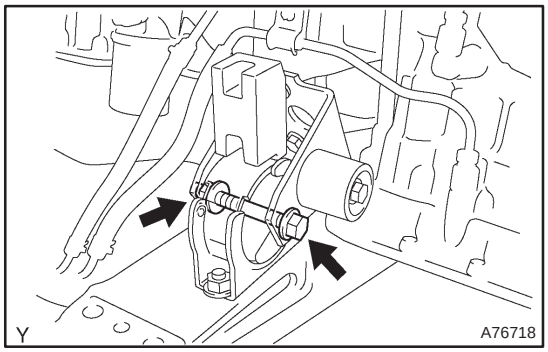


**60. REMOVE FRONT SUSPENSION CROSSMEMBER W/CENTER MEMBER**

(a) Remove the through bolt and nut, detach the engine mounting insulator FR from the engine mounting bracket.

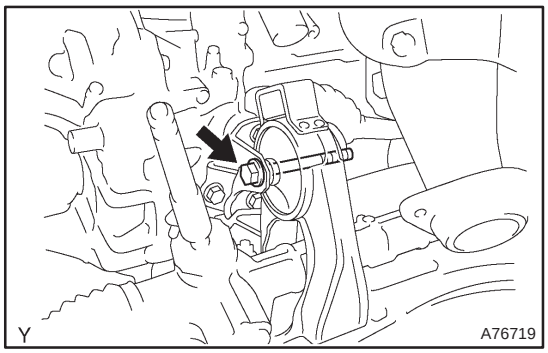


(b) Remove the through bolt, detach the engine mounting insulator RR from the suspension crossmember.

(c) Separate the engine and the transaxle assembly from the suspension crossmember and the engine mounting member.

**61. REMOVE STARTER ASSY (See page 19–3)**

**62. REMOVE MANUAL TRANSAXLE ASSY (M/T TRANSAXLE) (See page 41–15)**

**63. REMOVE AUTOMATIC TRANSAXLE ASSY (A/T TRANSAXLE) (See page 40–11)**

**64. REMOVE CLUTCH COVER ASSY (M/T TRANSAXLE) (See page 42–26)**

**65. REMOVE CLUTCH DISC ASSY (M/T TRANSAXLE) (See page 42–26)**

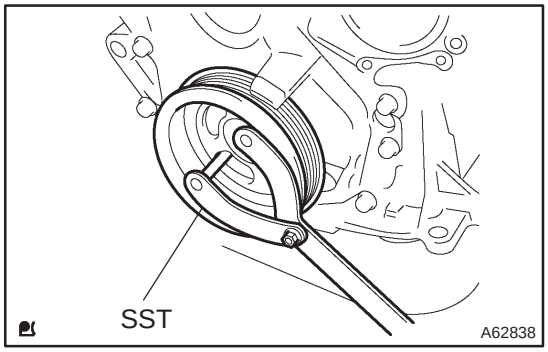


**66. REMOVE FLYWHEEL SUB–ASSY (M/T TRANSAXLE)**

(a) Hold the crankshaft with SST, remove the 8 bolts and the flywheel.

SST 09960–10010 (09962–01000, 09963–01000)

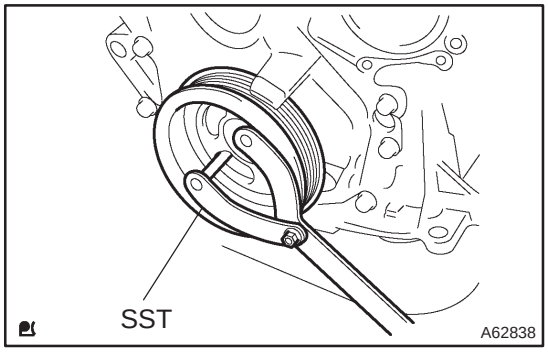


**67. REMOVE DRIVE PLATE & RING GEAR SUB–ASSY (A/T TRANSAXLE)**

(a) Hold the crankshaft with SST, remove the 8 bolts and the drive plate & ring gear.

SST 09960–10010 (09962–01000, 09963–01000)

**68. REMOVE IGNITION COIL ASSY**

(a) Disconnect the 4 ignition coil connectors.

cardiagn.com

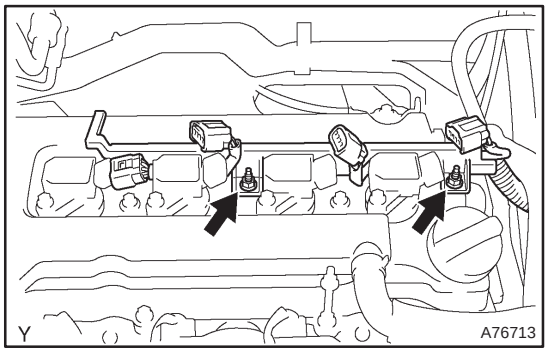


(b) Remove the 2 nuts which are used to secure the engine wire.

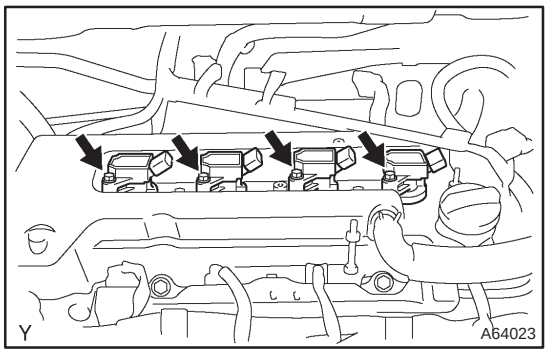


(c) Remove the 4 bolts and the 4 ignition coils.

**69. REMOVE FUEL DELIVERY PIPE SUB–ASSY**
**(See page 11–11)**

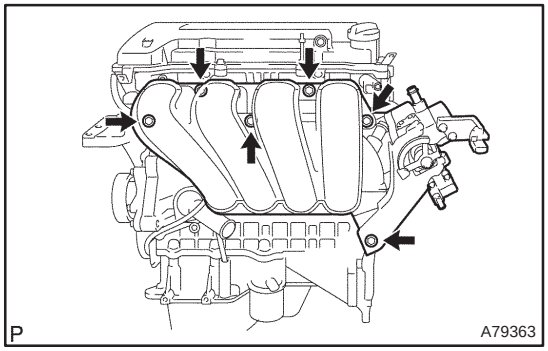


**70. REMOVE INTAKE MANIFOLD**

(a) Disconnect the 2 water hoses from the throttle body.
(b) Disconnect the ventilation hose and the ventilation hose No. 2 from the cylinder head cover.
(c) Disconnect the vacuum hose from the water by–pass pipe No. 1.
(d) Remove the 4 bolts, 2 nuts and 2 wire brackets,then remove the intake manifold and the throttle body assembly.
(e) Remove the gasket from the intake manifold and the throttle body assembly.

**71. REMOVE OIL LEVEL GAGE SUB–ASSY**

(a) Remove the oil level gage from the oil level gage guide.

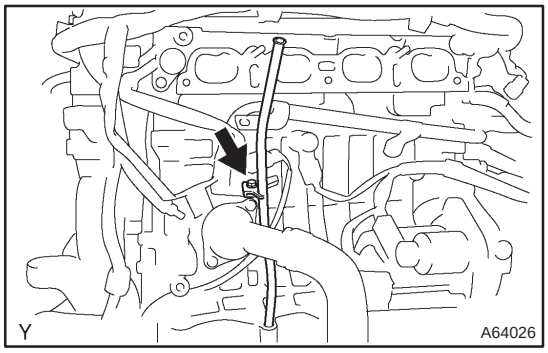


**72. REMOVE OIL LEVEL GAGE GUIDE**

(a) Disconnect the crank shaft position sensor cramp.
(b) Remove the bolt and the oil level gage guide.

cardiagn.com

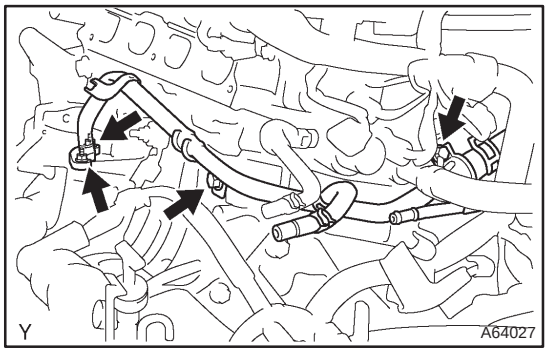


**73. REMOVE WATER BY–PASS PIPE NO.1**

(a) Disconnect the knock sensor cramp.

(b) Remove the 2 bolts and 2 nuts, then detach the water by–pass pipe and the gasket.

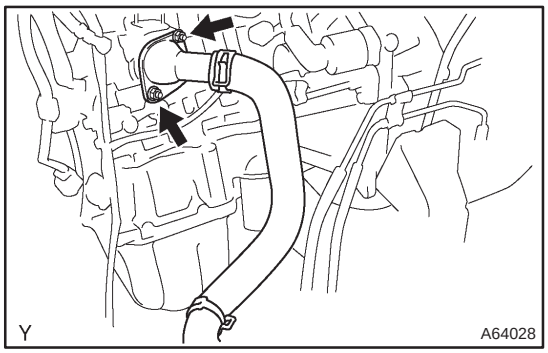


**74. REMOVE WATER INLET**

(a) Remove the 2 nuts and the water inlet.

**75. REMOVE THERMOSTAT**

**76. REMOVE ENGINE OIL PRESSURE SWITCH ASSY (See page 17–1)**

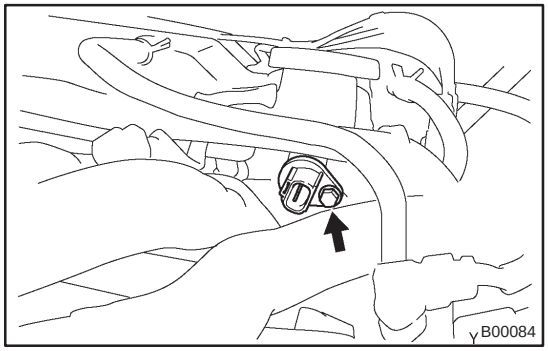


**77. REMOVE CAMSHAFT POSITION SENSOR**

(a) Remove the bolt and the camshaft position sensor.

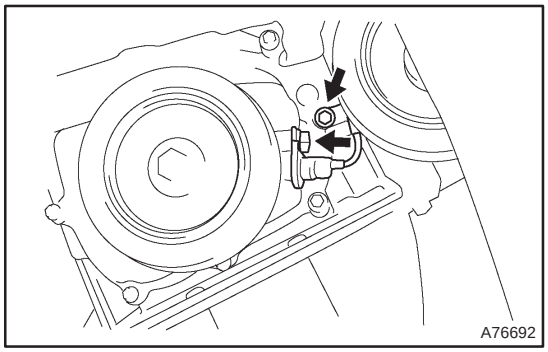


**78. REMOVE CRANKSHAFT POSITION SENSOR**

(a) Remove the 2 bolts and the crankshaft position sensor.

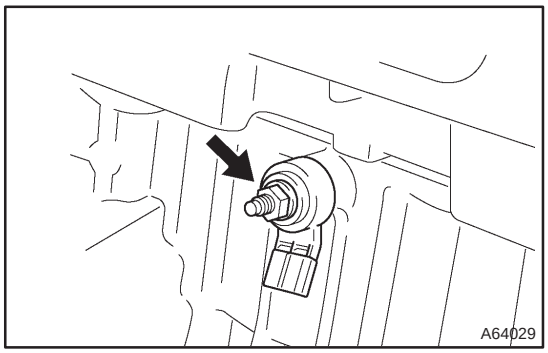


**79. REMOVE KNOCK SENSOR**

(a) Remove the nut and the knock sensor.

cardiagn.com

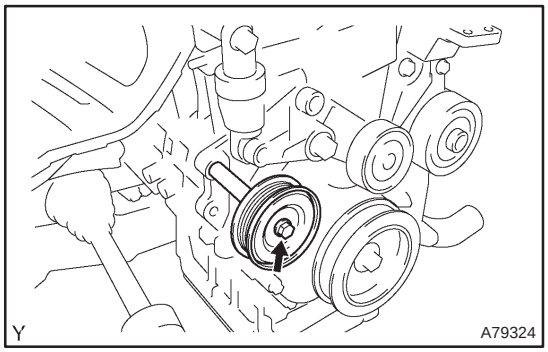


**80. REMOVE V–RIBBED IDLER ASSY NO.1**

(a) Remove the nut, bolt, tube and the idler.

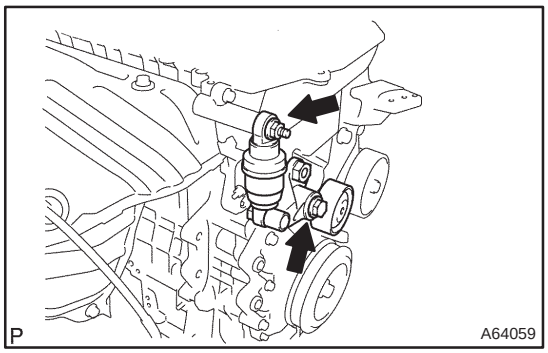


**81. REMOVE V–RIBBED BELT TENSIONER ASSY**

(a) Remove the bolts, nut and the V–ribbed belt tensioner.

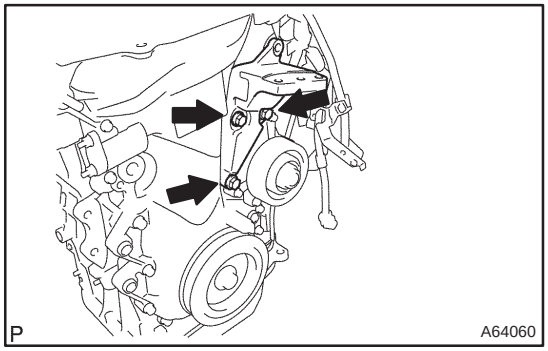


**82. REMOVE TRANSVERSE ENGINE ENGINE MOUNTING BRACKET**

(a) Remove the 3 bolts and the transverse engine mounting bracket.

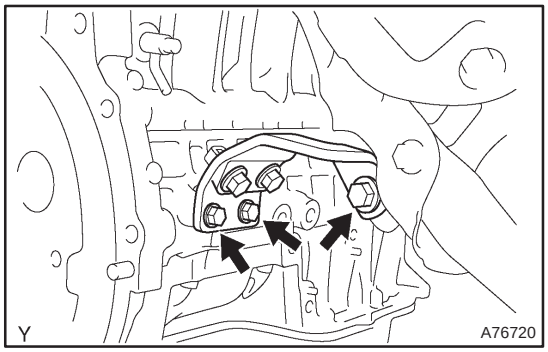


**83. REMOVE MANIFOLD STAY**

(a) Remove the 3 bolts and the manifold stay.

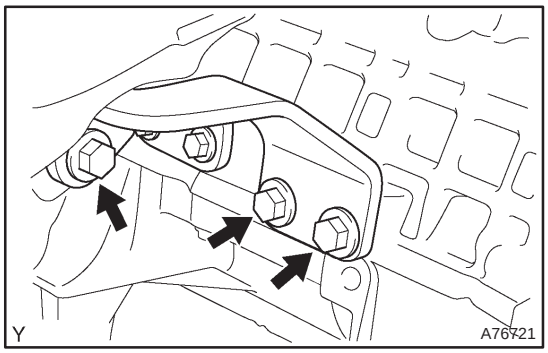


**84. REMOVE MANIFOLD STAY NO.2**

(a) Remove the 3 bolts and the manifold stay.

cardiagn.com

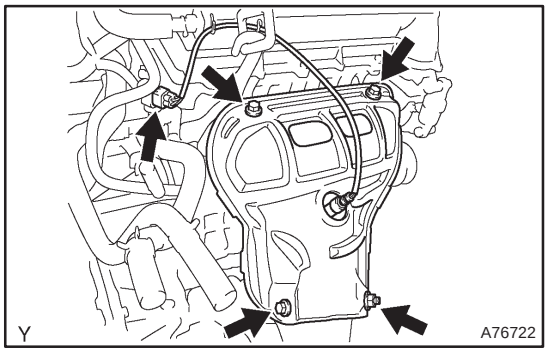


**85. REMOVE EXHAUST MANIFOLD HEAT INSULATOR NO.1**

(a) Disconnect the heated oxygen sensor connector.

(b) Remove the 3 bolts and the nut, and then remove the exhaust manifold heat insulator.

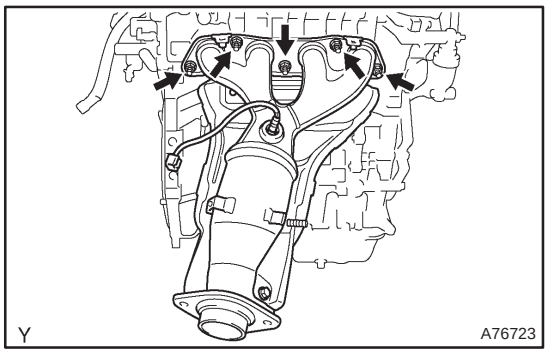


**86. REMOVE EXHAUST MANIFOLD**

(a) Remove the 5 nuts, then remove the exhaust manifold and the gasket.

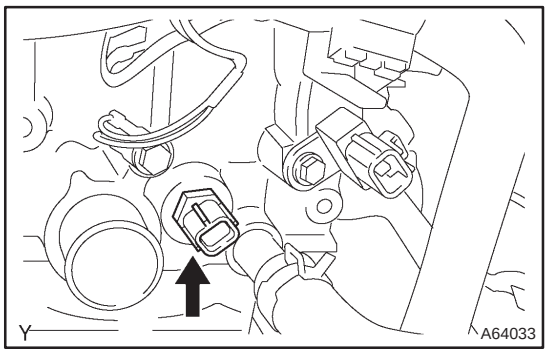


**87. REMOVE ENGINE COOLANT TEMPERATURE SENSOR**

(a) Using SST, remove the engine coolant temperature sensor.

SST 09817–33190

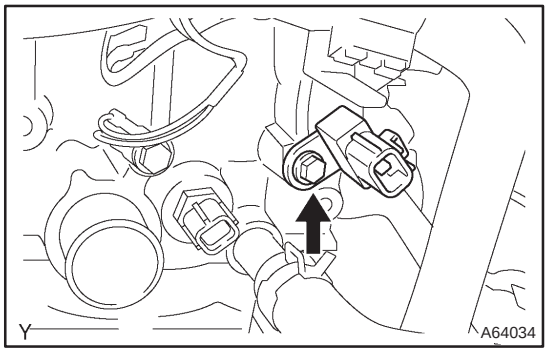


**88. REMOVE RADIO SETTING CONDENSER**

(a) Remove the bolt and the condenser.

**89. REMOVE WATER BY–PASS HOSE NO.2**

**90. REMOVE RADIATOR HOSE INLET**

**91. REMOVE HEATER INLET WATER HOSE**

**92. REPLACE PARTIAL ENGINE ASSY**

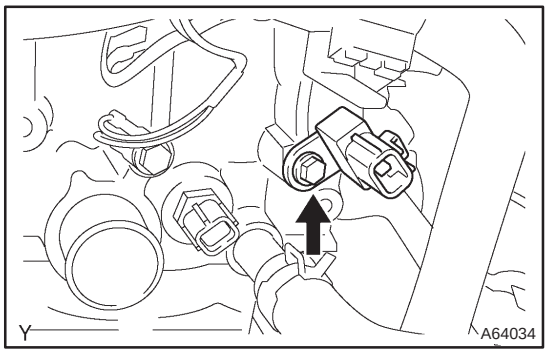


**93. INSTALL RADIO SETTING CONDENSER**

(a) Install the condenser with the bolt.

**Torque: 10 N·m (102 kgf·cm, 7 ft·lbf)**

cardiagn.com

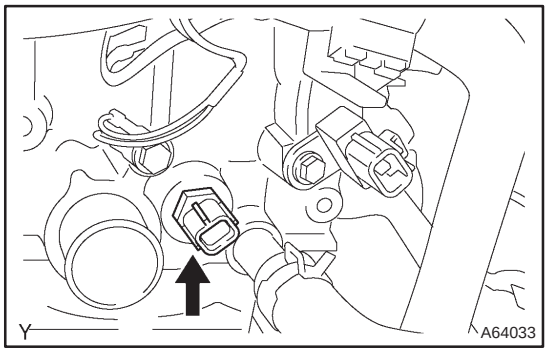


**94. INSTALL ENGINE COOLANT TEMPERATURE SENSOR**

(a) Install a new gasket to the engine coolant temperature sensor.

(b) Using SST, install the engine coolant temperature sensor.
SST 09817–33190
**Torque: 20 N·m (204 kgf·cm, 15 ft·lbf)**

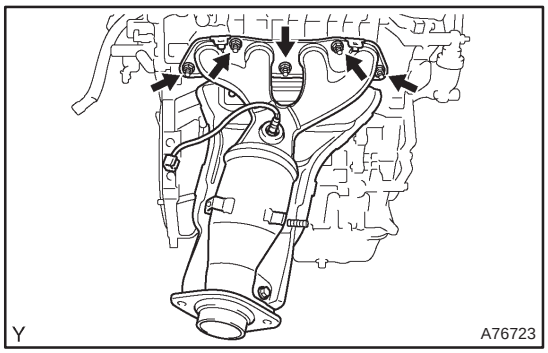


**95. INSTALL EXHAUST MANIFOLD**

(a) Install a new gasket and the exhaust manifold with the 5 nuts.
**Torque: 37 N·m (377 kgf·cm, 27 ft·lbf)**

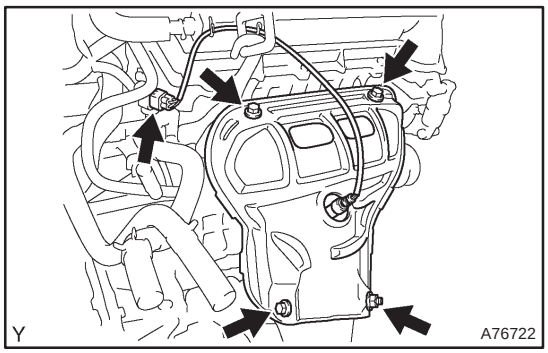


**96. INSTALL EXHAUST MANIFOLD HEAT INSULATOR NO.1**

(a) Install the exhaust manifold heat insulator,then install the 3 bolts and nut.
**Torque:**
**18 N·m (184 kgf·cm, 13 ft·lbf) for Bolt**
**12 N·m (122 kgf·cm, 9 ft·lbf) for Nut**

(b) Connect the heated oxygen sensor connector.

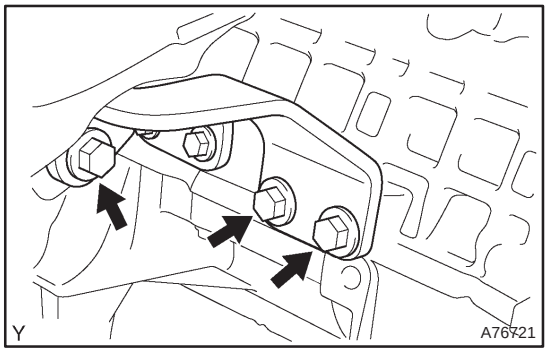


**97. INSTALL MANIFOLD STAY NO.2**

(a) Install the manifold stay with the 3 bolts.
**Torque: 49 N·m (500 kgf·cm, 36 ft·lbf)**

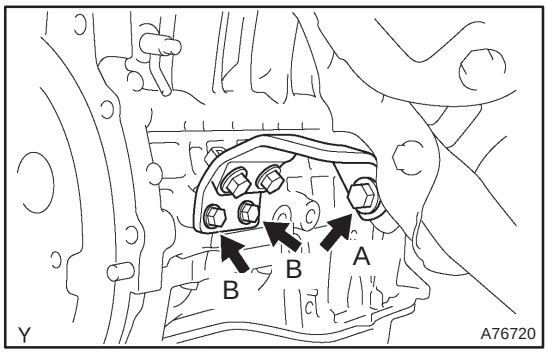


**98. INSTALL MANIFOLD STAY**

(a) Install the manifold stay with the 3 bolts.
**Torque:**
**49 N·m (500 kgf·cm, 36 ft·lbf) for A**
**37 N·m (377 kgf·cm, 27 ft·lbf) for B**

cardiagn.com

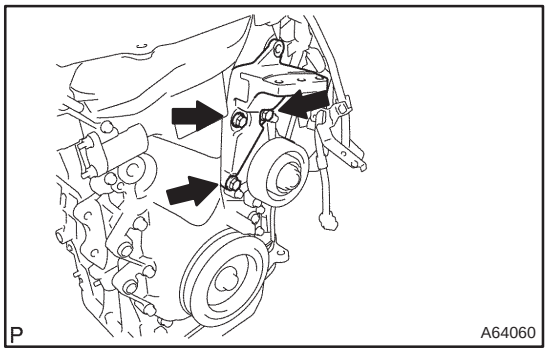


**99. INSTALL TRANSVERSE ENGINE ENGINE MOUNTING BRACKET**

(a) Install the transverse engine mounting bracket with the bolts.
**Torque: 47 N·m (479 kgf·cm, 35 ft·lbf)**

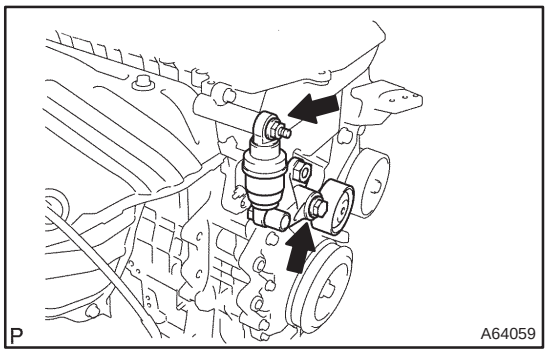


**100. INSTALL V–RIBBED BELT TENSIONER ASSY**

(a) Install the V–ribbed belt tensioner with the bolt and nut.
**Torque:**
**29 N·m (296 kgf·cm, 21 ft·lbf) for Nut**
**69 N·m (704 kgf·cm, 51 ft·lbf) for Bolt**

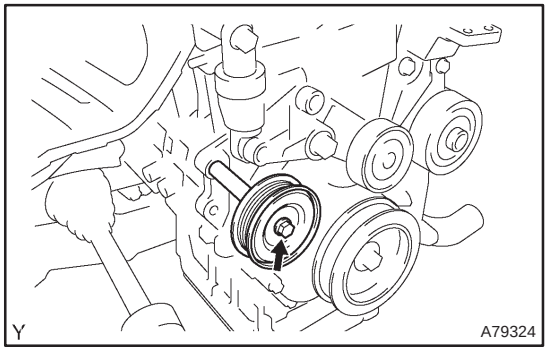


**101. INSTALL V–RIBBED IDLER ASSY NO.1**

(a) Install the tube and idler with the nut and bolt.
**Torque: 39.2 N·m (400 kgf·cm, 29 ft·lbf)**

**102. INSTALL KNOCK SENSOR (See page 10–17)**

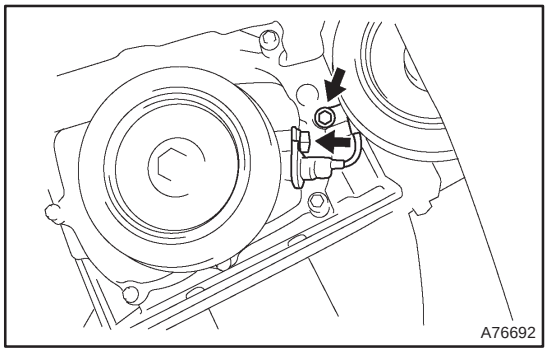


**103. INSTALL CRANKSHAFT POSITION SENSOR**

(a) Apply a light coat of engine oil to the O–ring on the crankshaft position sensor.

(b) Install the crankshaft position sensor with the 2 bolts.
**Torque: 9.0 N·m (92 kgf·cm, 80 in.·lbf)**

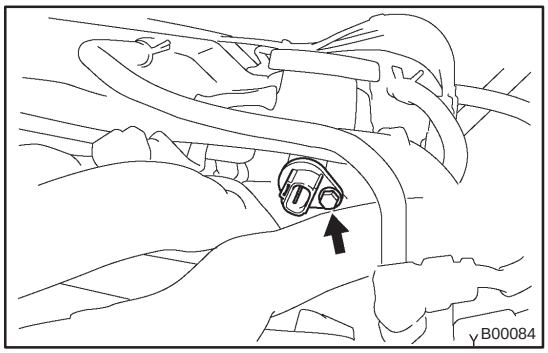


**104. INSTALL CAMSHAFT POSITION SENSOR**

(a) Apply a light coat of engine oil to the O–ring on the camshaft position sensor.

(b) Install the camshaft position sensor with the bolt.
**Torque: 9.0 N·m (92 kgf·cm, 80 in.·lbf)**

**105. INSTALL ENGINE OIL PRESSURE SWITCH ASSY (See page 17–1)**
**Adhesive: Part No.08833 – 00080, THREE BOND 1344.**

**106. INSTALL THERMOSTAT (See page 16–9)**



cardiagn.com

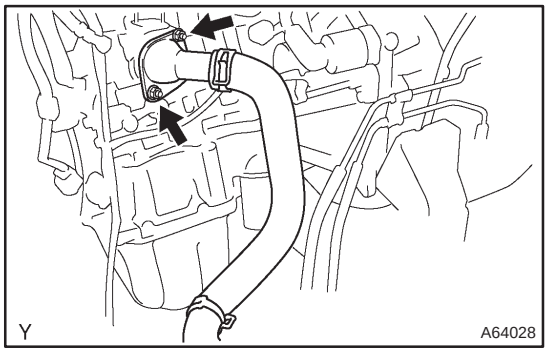


**107. INSTALL WATER INLET**

(a) Install the water inlet with the 2 nuts.
**Torque: 11 N·m (112 kgf·cm, 8 ft·lbf)**

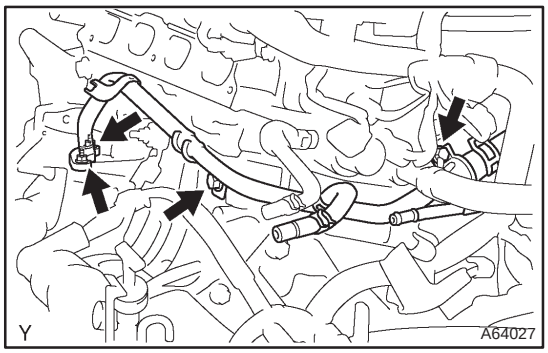


**108. INSTALL WATER BY–PASS PIPE NO.1**

(a) Install a new gasket and water by–pass pipe with the 2 nuts and 2 bolts.
**Torque: 9.0 N·m (92 kgf·cm, 80 in.·lbf)**

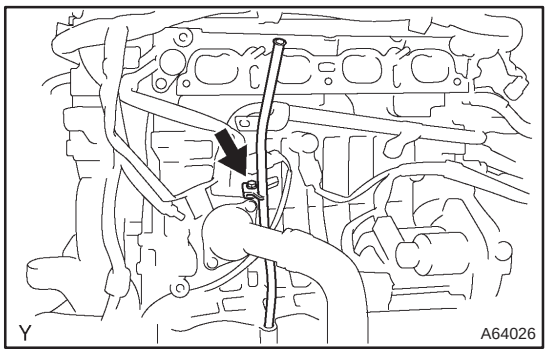


**109. INSTALL OIL LEVEL GAGE GUIDE**

(a) Apply a light coat of engine oil a new O–ring and install it to the oil level gage guide.
(b) Install the oil level gage guide with the bolt.
**Torque: 13 N·m (133 kgf·cm, 10 ft·lbf)**

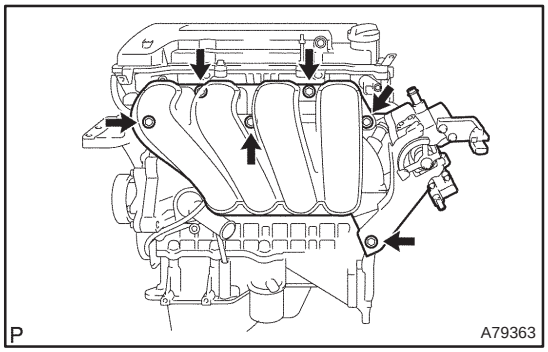


**110. INSTALL INTAKE MANIFOLD**

(a) Install a new gasket to the intake manifold.
(b) Install the intake manifold and 2 clamp brackets with the 2 nuts and 4 bolts.
**Torque: 30 N·m (306 kgf·cm, 22 ft·lbf)**

**111. INSTALL FUEL DELIVERY PIPE SUB–ASSY**
**(See page 11–11)**

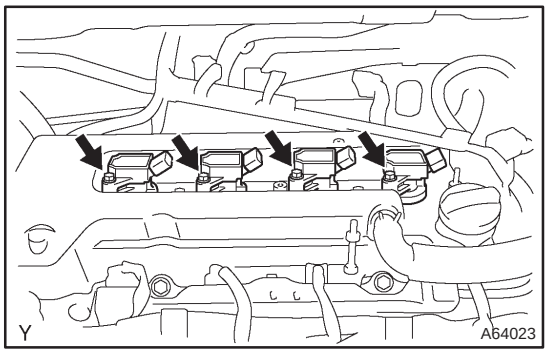


**112. INSTALL IGNITION COIL ASSY**

(a) Install the 4 ignition coils with the 4 bolts.
**Torque: 9.0 N·m (92 kgf·cm, 80 in.·lbf)**

cardiagn.com

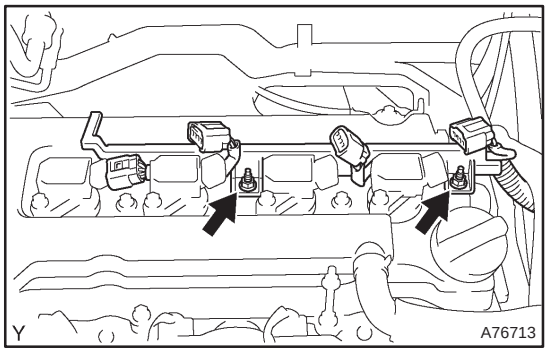


(b) Install the engine wire with the 2 nuts.
**Torque: 9.0 N·m (92 kgf·cm, 80 in.·lbf)**

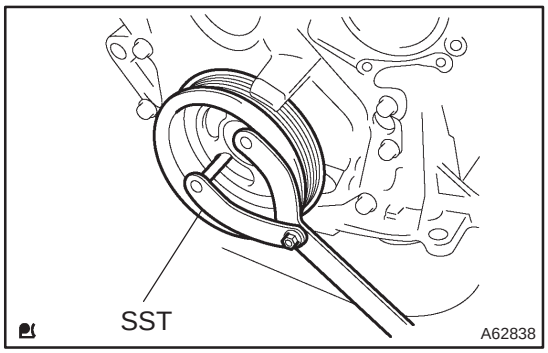


**113. INSTALL FLYWHEEL SUB–ASSY (M/T TRANSAXLE)**

(a) Hold the crankshaft with SST.
SST 09960–10010 (09962–01000, 09963–01000)

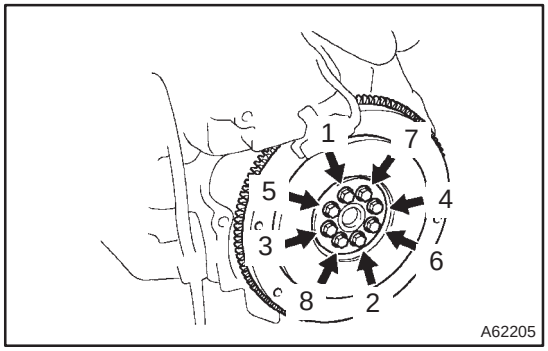


(b) Clean the bolt and bolt hole.
(c) Apply adhesive to the bolts.
**Adhesive:**
**Part No. 09330–00070, THREE BOND or equivalent.**
(d) Using several steps, install and tighten the 8 bolts uniformly in the sequence shown in the illustration.
**Torque: 49 N·m (500 kgf·cm, 36 ft·lbf)**

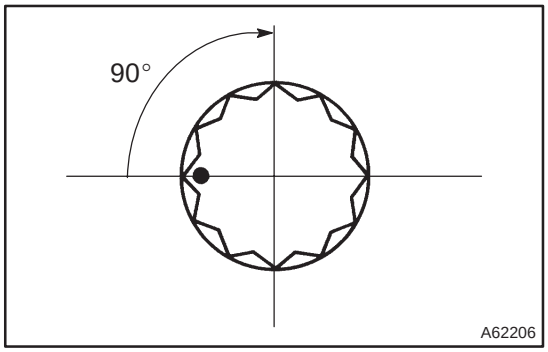


(e) Mark each bolt head with paint.
(f) Retighten the bolts by an additional 90° in the same sequence as step (d).
(g) Check that the paint marks are at 90° angle about the original position.

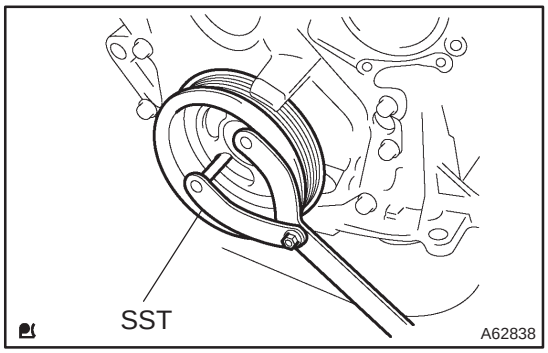


**114. INSTALL DRIVE PLATE & RING GEAR SUB–ASSY (A/T TRANSAXLE)**

(a) Hold the crankshaft with SST.
SST 09960–10010 (09962–01000, 09963–01000)

cardiagn.com

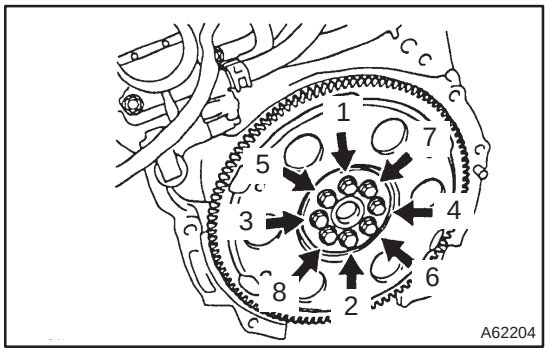


(b) Clean the bolt and bolt hole.
(c) Apply adhesive to the bolts.
**Adhesive:**
**Part No. 09330–00070, THREE BOND or equivalent.**
(d) Using several steps, install and tighten the 8 bolts uniformly in the sequence shown in the illustration.
**Torque: 88 N·m (897 kgf·cm, 65 ft·lbf)**

**115. INSTALL CLUTCH DISC ASSY (M/T TRANSAXLE) (See page 42–26)**
SST 09301–00210
**116. INSTALL CLUTCH COVER ASSY (M/T TRANSAXLE) (See page 42–26)**
SST 09301–00210
**117. INSTALL MANUAL TRANSAXLE ASSY (M/T TRANSAXLE) (See page 41–15)**
**118. INSTALL AUTOMATIC TRANSAXLE ASSY (A/T TRANSAXLE) (See page 40–11)**
**119. INSTALL STARTER ASSY (See page 19–3)**

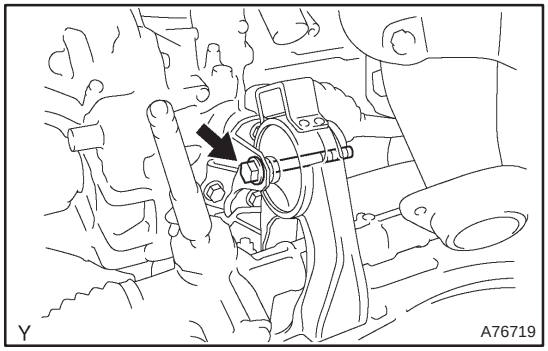


**120. INSTALL FRONT SUSPENSION CROSSMEMBER W/CENTER MEMBER**
(a) Attach the engine and transaxle assembly to the suspension crossmember and the engine mounting member.
(b) Install the bolt which is used to secure the rear engine mounting bracket to the mounting insulator.
**Torque: 87 N·m (887 kgf·cm, 64 ft·lbf)**

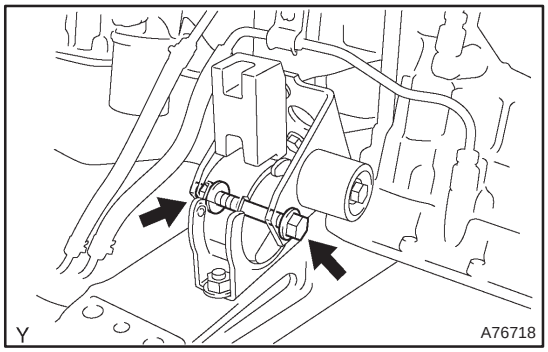


(c) Install the bolt which is used to secure the front engine mounting bracket to the mounting insulator.
**Torque: 52 N·m (530 kgf·cm, 38 ft·lbf)**
**121. INSTALL ENGINE ASSEMBLY WITH TRANSAXLE**
SST 09670–00010
(a) Set the engine assembly with transaxle on the engine lifter.

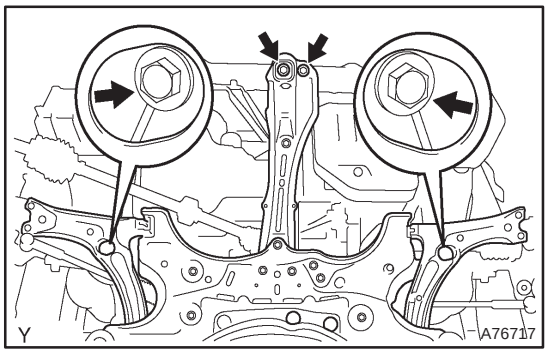


(b) Temporarily install the suspension crossmember with the 2 bolts and 2 nuts.
(c) Install the engine mounting insulator LH.
**Torque: 80 N·m (816 kgf·cm, 59 ft·lbf)**
(d) Install the engine mounting insulator RH.
**Torque: 52 N·m (530 kgf·cm, 38 ft·lbf)**



cardiagn.com

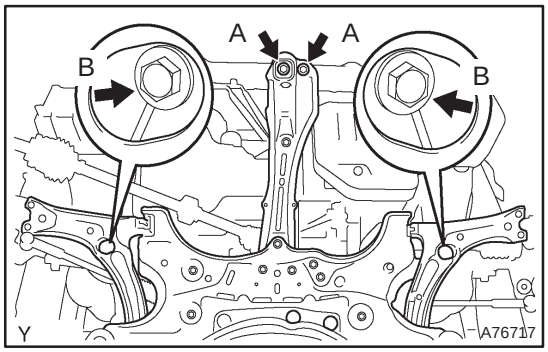


(e) Tighten the 2 bolts and 2 nuts.
**Torque:**
**45 N·m (459 kgf·cm, 33 ft·lbf) for Bolt A**
**133 N·m (1,356 kgf·cm, 98 ft·lbf) for Nut B**

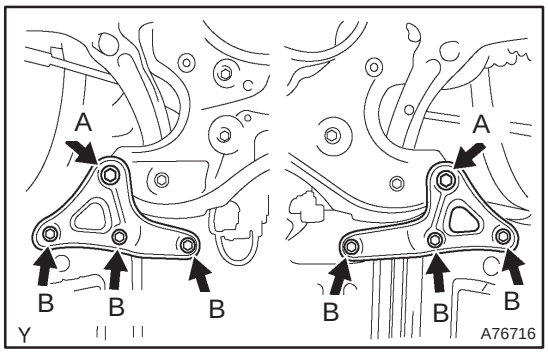


(f) Install the front suspension member brace LH and RH with the 8 bolts.
**Torque:**
**133 N·m (1,356 kgf·cm, 98 ft·lbf) for Bolt A**
**80 N·m (816 kgf·cm, 59 ft·lbf) for Bolt B**

**NOTICE:**
**When installing the crossmember, check that the positioning holes on the crossmember and on the vehicle are aligned with each other.**

**122. INSTALL FRONT SUSPENSION ARM SUB–ASSY LOWER NO.1 LH (See page 30–6)**
**123. INSTALL FRONT SUSPENSION ARM SUB–ASSY LOWER NO.1 RH**
HINT:
Perform the same procedure as above on the opposite side.
**124. INSTALL FRONT STABILIZER LINK ASSY LH (See page 30–6)**
**125. INSTALL FRONT STABILIZER LINK ASSY RH**
HINT:
Perform the same procedure as above on the opposite side.
**126. INSTALL TIE ROD END SUB–ASSY LH (See page 30–6)**
**127. INSTALL TIE ROD END SUB–ASSY RH**
HINT:
Perform the same procedure as above on the opposite side.
**128. INSTALL FRONT AXLE HUB LH NUT (See page 30–6)**
**129. INSTALL FRONT AXLE HUB RH NUT**
HINT:
Perform the same procedure as above on the opposite side.
**130. INSTALL EXHAUST PIPE ASSY FRONT (See page 15–2)**
**131. INSTALL FLOOR PANEL BRACE FRONT**
**Torque: 30 N·m (306 kgf·cm, 22 ft·lbf)**
**132. INSTALL STEERING INTERMEDIATE SHAFT (See page 50–9)**
**133. INSTALL GENERATOR ASSY (See page 19–7)**
**134. INSTALL COMPRESSOR AND MAGNETIC CLUTCH (W/ AIR CONDITIONING)**
HINT:
- 1ZZ–FE (See page 55–74)
- 3ZZ–FE (See page 55–70)

**135. INSTALL CLUTCH RELEASE CYLINDER ASSY (M/T TRANSAXLE)**
**(See page 41–15)**
**136. INSTALL FLOOR SHIFT CABLE TRANSMISSION CONTROL SHIFT (A/T TRANSAXLE)**
**(See page 40–11)**

cardiagn.com

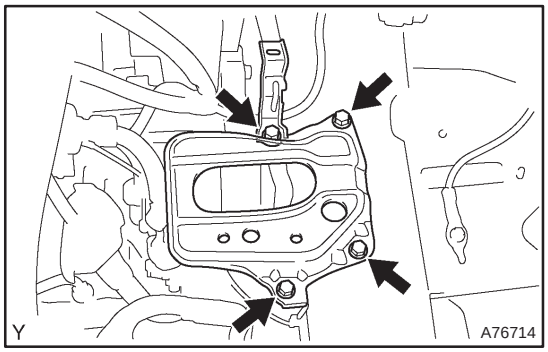


**137. INSTALL BATTERY CARRIER**

(a) Install the battery carrier and bracket with the 4 bolts.
**Torque: 12.8 N·m (131 kgf·cm, 9 ft·lbf)**

**138. INSTALL BATTERY**
**Torque: 5.0 N·m (51 kgf·cm, 44 in.·lbf)**

**139. INSTALL RADIATOR SUPPORT NO.1**

(a) Install the 2 radiator supports with the 2 bolts.
**Torque: 19 N·m (194 kgf·cm, 14 ft·lbf)**

**140. INSTALL ACCELERATOR CONTROL CABLE ASSY (1ZZ–FE ENGINE TYPE) (See page 10–9)**

**141. INSTALL ACCELERATOR CONTROL CABLE ASSY (3ZZ–FE ENGINE TYPE) (See page 10–15)**

**142. INSTALL AIR CLEANER CASE SUB–ASSY**

(a) Install the air cleaner case with the 3 bolts.
**Torque: 5.0 N·m (51 kgf·cm, 44 in.·lbf)**

**143. INSTALL AIR CLEANER ASSEMBLY WITH HOSE (See page 10–9 or 10–15)**

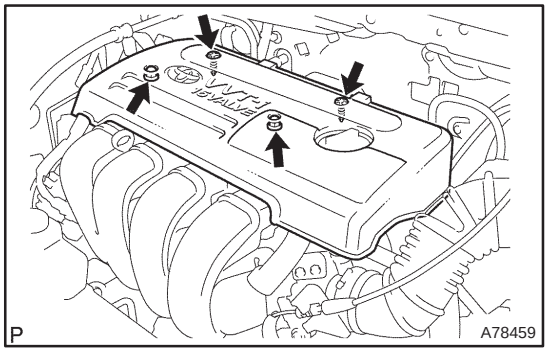


**144. INSTALL CYLINDER HEAD COVER NO.2**

(a) Install the cylinder head cover with the 2 nuts and 2 clips.
**Torque: 7.0 N·m (71 kgf·cm, 62 in.·lbf)**

**145. INSTALL FRONT WHEELS**
**Torque: 103 N·m (1,050 kgf·cm, 76 ft·lbf)**

**146. ADD AUTOMATIC TRANSAXLE FLUID (A/T TRANSAXLE)**

**147. ADD ENGINE OIL**

**148. ADD ENGINE COOLANT (See page 16–7)**

**149. CHECK FOR ENGINE OIL LEAKS**

**150. CHECK FOR ENGINE COOLANT LEAKS (See page 16–7)**

**151. CHECK FOR FUEL LEAKS**

**152. CHECK FOR EXHAUST GAS LEAKS**

**153. CHECK IDLE SPEED AND IGNITION TIMING (See page 14–1)**
SST 09843–18040

**154. INSPECT CO/HC (See page 14–1)**

**155. INSPECT AND ADJUST FRONT WHEEL ALIGNMENT (See page 26–6)**

**156. CHECK ABS SPEED SENSOR SIGNAL**

cardiagn.com

# TIMING BELT (1CD–FTV)

## COMPONENTS

141C5–01

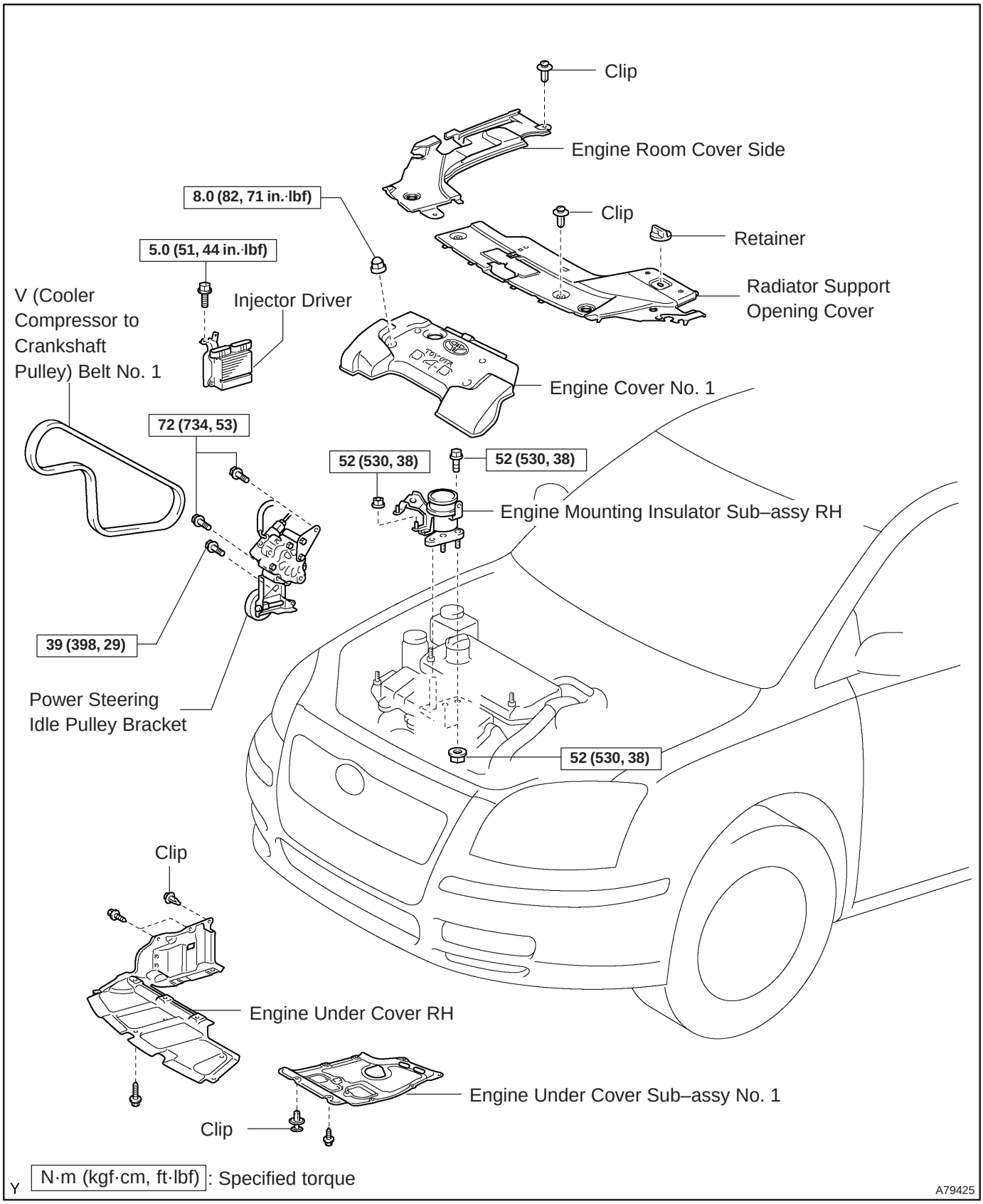


cardiagn.com

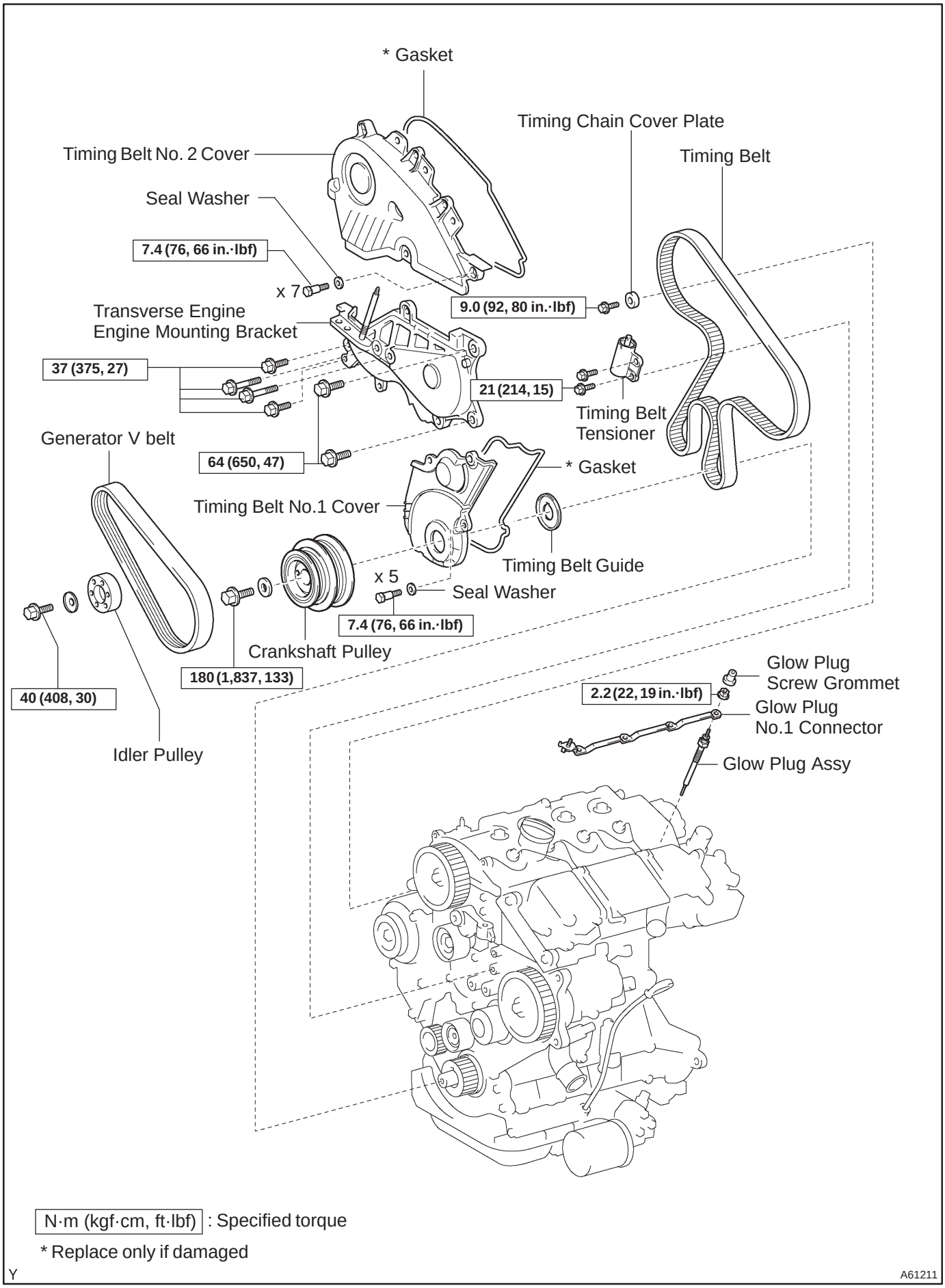


N·m (kgf·cm, ft·lbf) : Specified torque

* Replace only if damaged

Y

A61211

cardiagn.com

141C6–01

# REPLACEMENT

1. **REMOVE FRONT WHEEL RH**
2. **REMOVE ENGINE UNDER COVER SUB–ASSY NO.1**
3. **REMOVE ENGINE UNDER COVER RH**
4. **REMOVE RADIATOR SUPPORT OPENING COVER**
5. **REMOVE ENGINE ROOM COVER SIDE**
6. **REMOVE ENGINE COVER NO.1**

(a) Remove the 5 nuts and the engine cover.

7. **REMOVE INJECTOR DRIVER (See page 14–286)**
8. **REMOVE V (COOLER COMPRESSOR TO CRANKSHAFT PULLEY) BELT NO.1 (See page 14–269)**
9. **REMOVE GENERATOR V BELT (See page 14–269)**
10. **SEPARATE POWER STEERING IDLE PULLEY BRACKET (See page 14–286)**

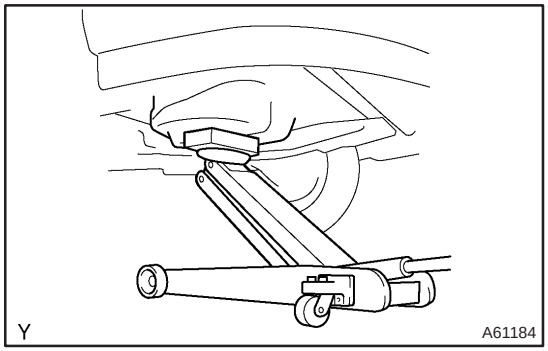


11. **REMOVE ENGINE MOUNTING INSULATOR SUB–ASSY RH**

(a) Place a wooden block on a jack underneath the engine.

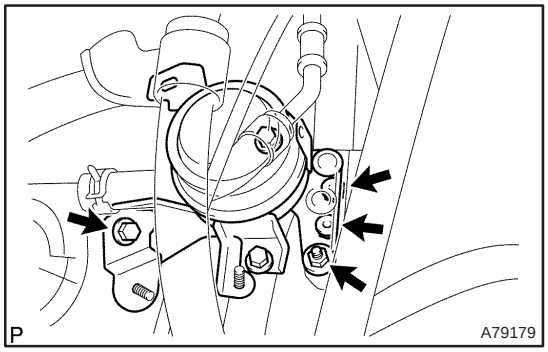


(b) Remove the 3 bolts and 3 nuts, and then detach the engine mounting insulator sub assy RH.

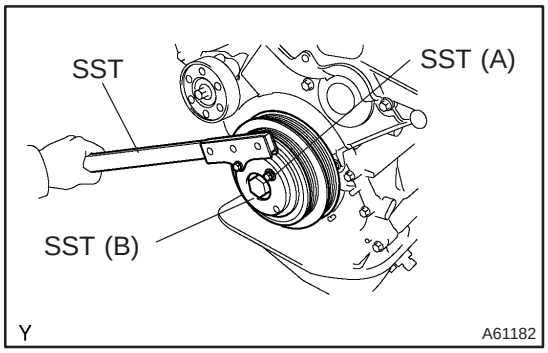


12. **REMOVE CRANKSHAFT PULLEY**

(a) Using SSTs, remove the pulley bolt.

SST 09213–54015 (90105–08076), 09330–00021

HINT:

When using SST (A) (90105–08076), a plate washer (5 mm or 0.20 in.) must be inserted between SST (A) and SST (B).

cardiagn.com

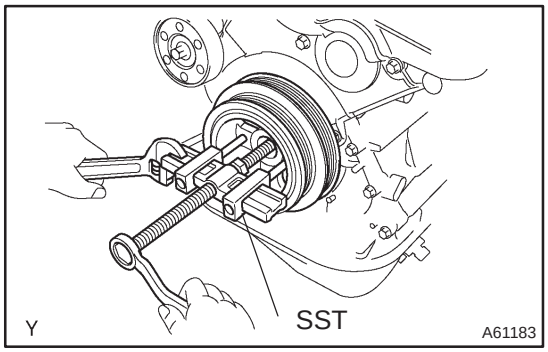


(b) Using SST, remove the pulley.
SST 09950–50013 (09951–05010, 09952–05010, 09953–05020, 09954–05031)

**13. REMOVE IDLER PULLEY SUB–ASSY**

(a) Remove the bolt and washer, and then remove the pulley.

**14. REMOVE TIMING BELT NO.2 COVER**

(a) Remove the 7 bolts and 7 seal washers, and then remove the timing belt cover.

**15. REMOVE TIMING BELT NO.1 COVER**

(a) Remove the 5 bolts and 5 seal washers, and then remove the timing belt cover.

**16. REMOVE TIMING BELT GUIDE**

**17. REMOVE TRANSVERSE ENGINE ENGINE MOUNTING BRACKET**

(a) Remove the 6 bolts and the engine mounting bracket.

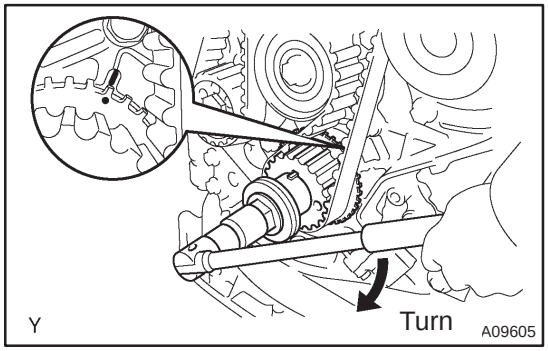


**18. SET NO. 1 CYLINDER TO TDC/COMPRESSION**

(a) Using the crankshaft pulley bolt, align the dot mark of the crankshaft timing pulley with the TDC mark of the oil pump by turning the crankshaft.

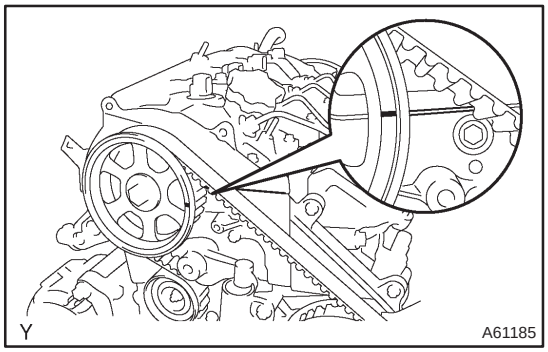


(b) Check that the timing mark of the camshaft timing pulley is aligned with a joint of the cylinder head and the cylinder head cover.

If not, revolve the crankshaft 1 revolution (360˚) to align the mark.

**19. REMOVE TIMING CHAIN COVER PLATE**

(a) Remove the bolt and the timing chain cover plate.

cardiagn.com

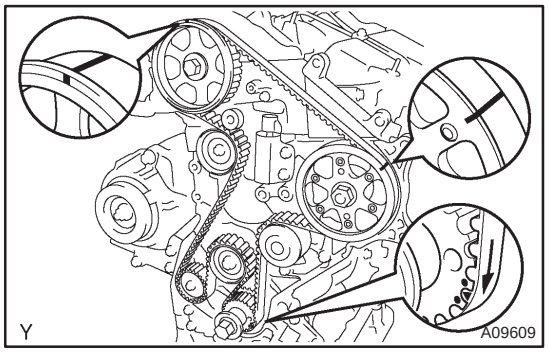


**20. REMOVE TIMING BELT**

HINT:

If re–use the timing belt, draw an arrow on the belt which indicates the engine revolution direction and put match marks on the pulleys and the belt before removing. This operation will be very helpful when re–installing the timing belt.

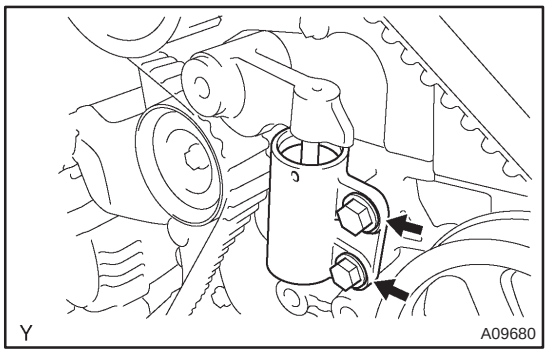


(a) Alternately loosen the 2 bolts to remove the timing belt tensioner.

(b) Remove the timing belt.

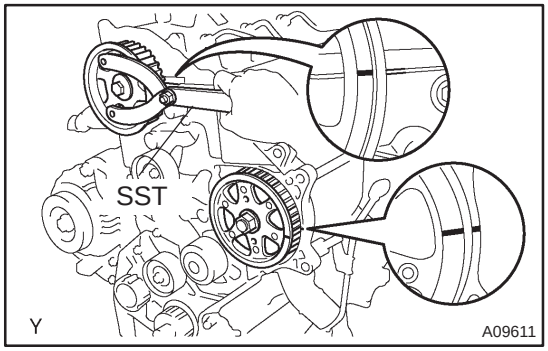


**21. SET NO. 1 CYLINDER TO TDC/COMPRESSION**

(a) Using SST, set the pulleys of the camshaft and the injection pump so that each timing mark of the pulleys is aligned with its timing mark on the cylinder head assembly and the water pump assembly.

SST 09960–10010 (09962–01000, 09963–01000)

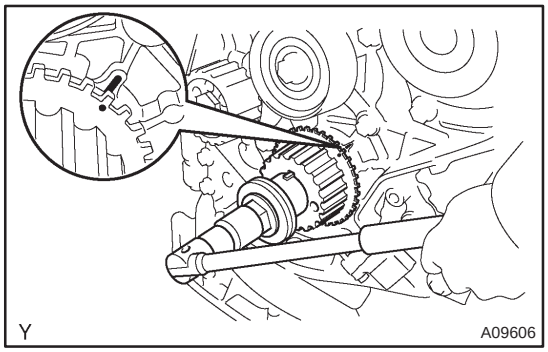


(b) Using the crankshaft pulley bolt, align the dot mark of the crankshaft timing pulley with the TDC mark of the oil pump by turning the crankshaft.

**NOTICE:**

**Take great care, when turning the camshaft and crankshaft. Since the valve head and the piston head are sensitive, damage to them may result when the piston head contacts with the valve heads.**

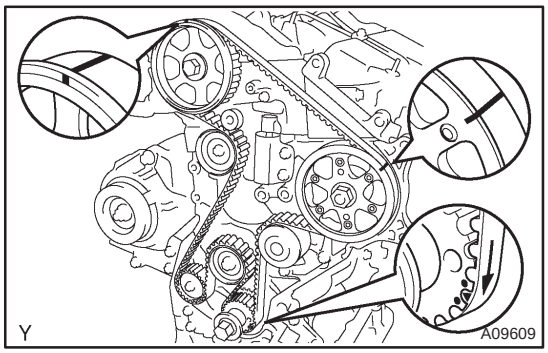


**22. INSTALL TIMING BELT**

**NOTICE:**

**The engine should be cold.**

(a) Remove any oil or water on each pulley and keep them clean.

**NOTICE:**

**Do not use any cleaning agent.**

cardiagn.com

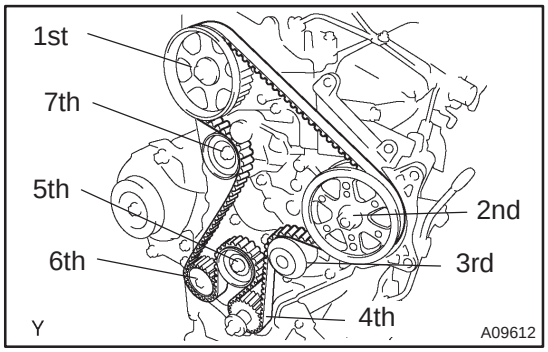


(b) Install the timing belt in the following order:
1. Camshaft timing pulley
2. Supply pump drive pulley
3. Water pump pulley
4. Crankshaft timing pulley
5. No. 2 idler pulley
6. Oil pump pulley
7. No. 1 idler pulley

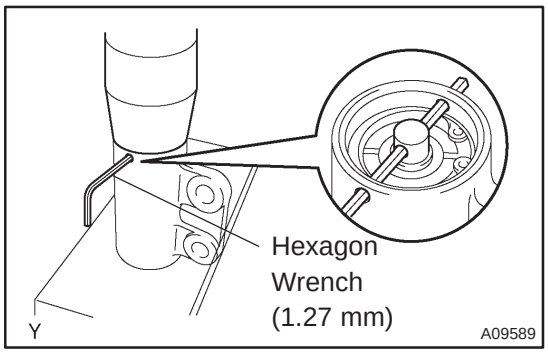


(c) Install the timing belt tensioner.
(1) Using a press, slowly press in the push rod with pressure 981 to 9,807 N (100 to 1,000 kgf, 200 to 2,205 lbf).
(2) Align the holes of the push rod and the housing, insert hexagon wrench (1.27 mm) through the holes to keep the setting position of the push rod.
(3) Release the press.

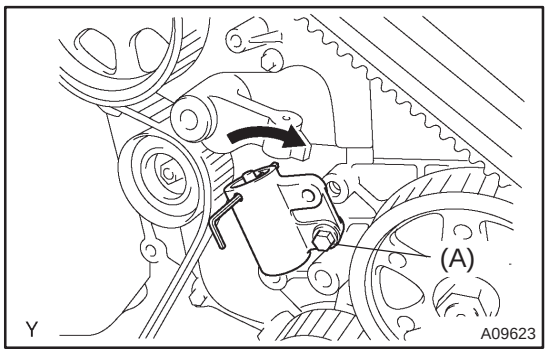


(4) Temporarily install the tensioner with bolt (A).
(5) Turn the tensioner clockwise and temporarily install the other bolt.

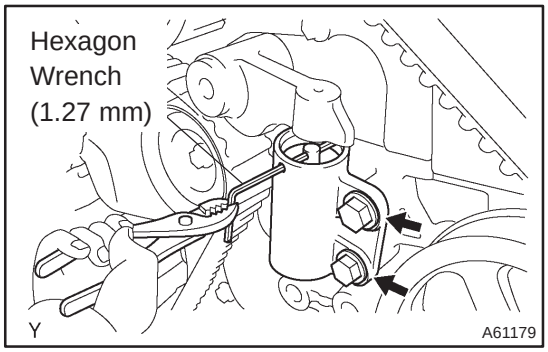


(6) Alternately tighten the 2 bolts.
**Torque: 21 N·m (214 kgf·cm, 15 ft·lbf)**
(7) Remove the hexagon wrench from the tensioner.

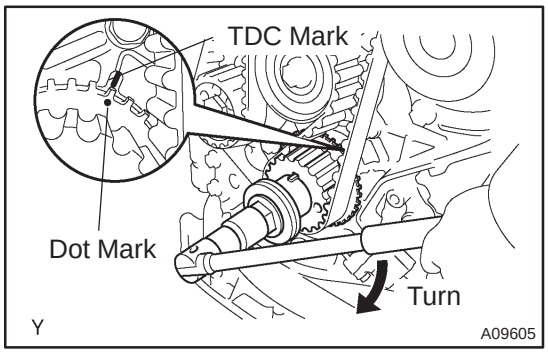


**23. CHECK VALVE TIMING**

(a) Slowly turn the crankshaft 2 complete revolutions (720°) from TDC to TDC.

**NOTICE:**
**Always turn the crankshaft clockwise.**

cardiagn.com

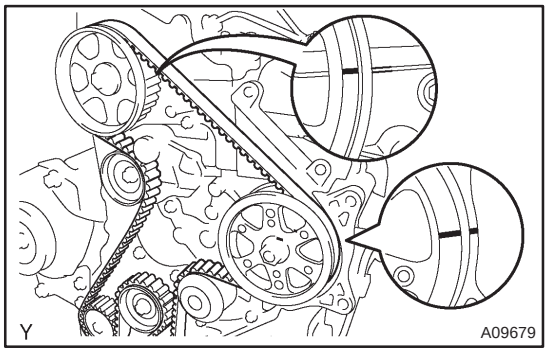


(b) Check that each timing mark of the pulleys is aligning with the timing marks of the engine assembly as shown in the illustration.

If the timing marks are not aligned, remove the timing belt and reinstall it.

(c) Remove the crankshaft pulley bolt.

**24. INSTALL TIMING CHAIN COVER PLATE**
**Torque: 9.0 N·m (92 kgf·cm, 80 in.·lbf)**

**25. INSTALL TRANSVERSE ENGINE ENGINE MOUNTING BRACKET**
**Torque:**
**37 N·m (375 kgf·cm, 27 ft·lbf) for 14 mm head bolt**
**64 N·m (650 kgf·cm, 47 ft·lbf) for 17 mm head bolt**

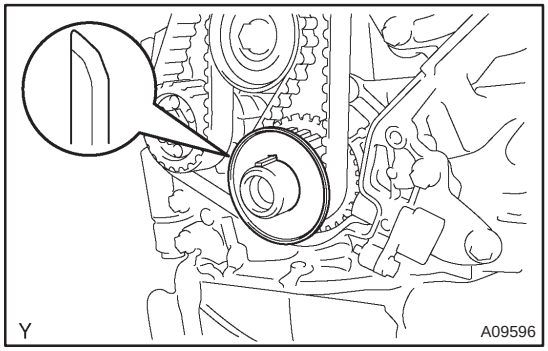


**26. INSTALL TIMING BELT GUIDE**

(a) Install the belt guide, facing the cap side outward.

**27. INSTALL TIMING BELT NO.1 COVER**

(a) Check the timing belt cover gasket for cracks or deteriorations etc.

If the gasket has cracks or has deteriorated, replace it by the following steps:

(1) Using a screwdriver and gasket scraper, remove all the old gaskets.

(2) Thoroughly clean all components to remove all the loose material.

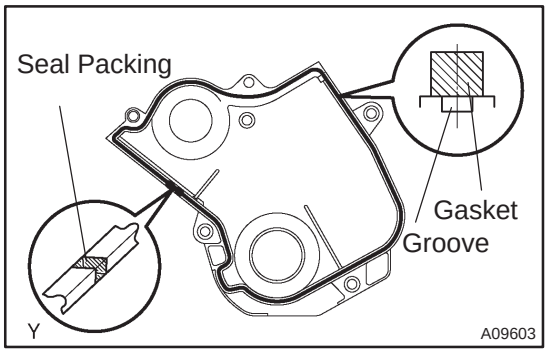


(3) Remove the backing paper from a new gasket and affix the gasket to the timing belt cover as shown in the illustration.

**NOTICE:**

- **Affix the gasket at the center of the groove.**
- **At the corners, try to keep the gasket thickness uniform.**

(4) After installing the gasket, press it down so that the adhesive firmly sticks to the timing belt cover.

(5) If there is a gap where the end of the gasket meets, use seal packing to close the gap.

**Seal packing: Part No. 08826–00080 or equivalent**

cardiagn.com

(b) Install the No. 1 timing belt cover and the gasket with the 5 bolts and 5 seal washers.
**Torque: 7.4 N·m (75 kgf·cm, 65 in.·lbf)**

(c) After installing the belt cover, check that there is no peelings of the gasket.

**28. INSTALL TIMING BELT NO.2 COVER**

(a) Check the timing belt cover gasket for cracks or deteriorations etc.

If the gasket has cracks or has deteriorated, replace it by the following steps:

(1) Using a screwdriver and gasket scraper, remove all the old gasket.

(2) Thoroughly clean all components to remove all the loose material.

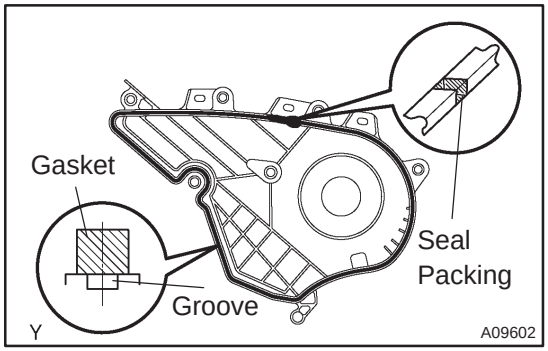


(3) Remove the backing paper from a new gasket and affix the gasket to the timing belt cover as shown in the illustration.

**NOTICE:**

- **Affix the gasket at the center of the groove.**
- **At the corners, try to keep the gasket thickness uniform.**

(4) After installing the gasket, press it down so that the adhesive firmly sticks to the timing belt cover.

(5) If there is a gap where the end of the gasket meets, use a seal packing to close the gap.
**Seal packing: Part No. 08826–00080 or equivalent**

(b) Install the No. 2 timing belt cover and the gasket with the 7 bolts and 7 seal washers.
**Torque: 7.4 N·m (75 kgf·cm, 65 in.·lbf)**

**29. INSTALL IDLER PULLEY SUB–ASSY**
**Torque: 40 N·m (408 kgf·cm, 30 ft·lbf)**

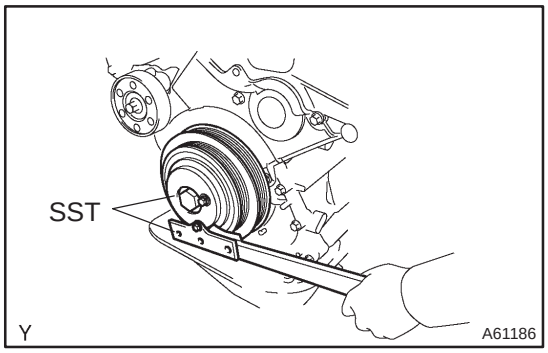


**30. INSTALL CRANKSHAFT PULLEY**

(a) Align the keyway of the pulley with the key located on the crankshaft, slide the pulley into place.

(b) Using SST, install the pulley bolt.
SST 09213–54015 (90105–08076), 09330–00021
**Torque: 180 N·m (1,835 kgf·cm, 133 ft·lbf)**

HINT:
When using a bolt (91651–60855), a plate washer (5 mm or 0.20 in.) must be inserted between the pulley bolt and SST.

**31. INSTALL ENGINE MOUNTING INSULATOR SUB–ASSY RH**
**Torque:52 N·m (530 kgf·cm, 38 ft·lbf)**

**32. INSTALL POWER STEERING IDLE PULLEY BRACKET (See page 14–286)**

**33. ADJUST V (COOLER COMPRESSOR TO CRANKSHAFT PULLEY) BELT NO.1 (See page 14–269)**



cardiagn.com

**34. INSTALL INJECTOR DRIVER (See page 14–286)**

**35. INSTALL ENGINE COVER NO.1**
**Torque: 8.0 N·m (82 kgf·cm, 71 in.·lbf)**

**36. INSTALL FRONT WHEEL RH**
**Torque: 103 N·m (1,050 kgf·cm, 76 ft·lbf)**

cardiagn.com

# TIMING GEAR COVER OIL SEAL (1ZZ–FE/3ZZ–FE)

141CN–01

## REPLACEMENT

1. **REMOVE FRONT WHEEL RH (See page 14–27)**
2. **REMOVE ENGINE UNDER COVER SUB–ASSY NO.1 (See page 14–27)**
3. **REMOVE ENGINE UNDER COVER RH (See page 14–27)**
4. **REMOVE RADIATOR SUPPORT OPENING COVER (See page 14–27)**
5. **REMOVE ENGINE ROOM COVER SIDE (See page 14–27)**

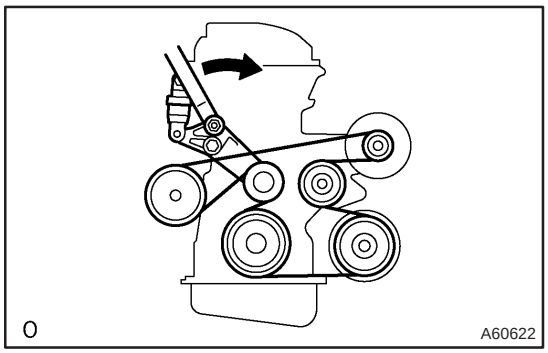


6. **REMOVE FAN AND GENERATOR V BELT**

(a) Turn the V–ribbed belt tensioner clockwise slowly and loosen it. Then, remove the fan and generator V belt and put back the V–ribbed belt tensioner carefully.

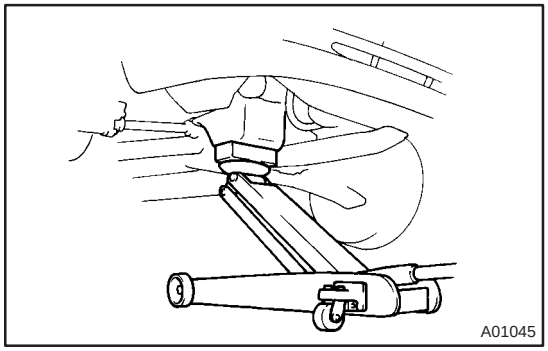


7. **REMOVE ENGINE MOUNTING INSULATOR SUB–ASSY RH**

(a) Place a wooden block on a jack underneath the engine. Remove the 4 bolts and 2 nuts and detach the engine mounting insulator RH.

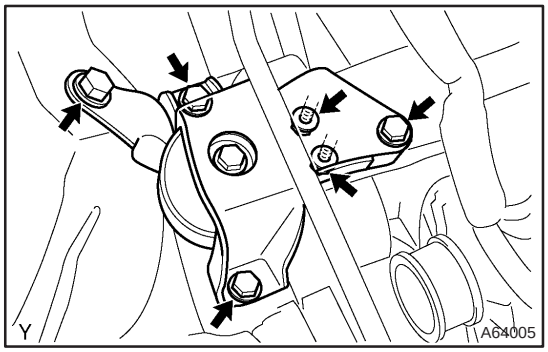


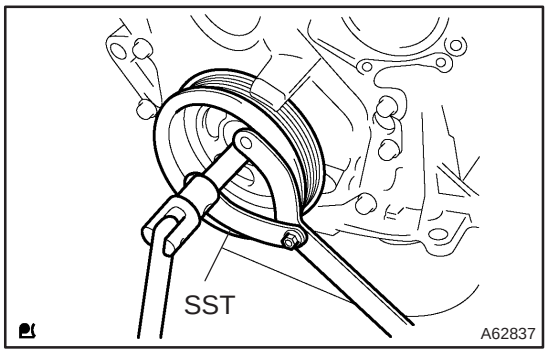


8. **REMOVE CRANKSHAFT PULLEY**

(a) Using SST, remove the crankshaft pulley bolt.
SST 09960–10010 (09962–01000, 09963–01000)

(b) Remove the crankshaft pulley from the crankshaft.

cardiagn.com

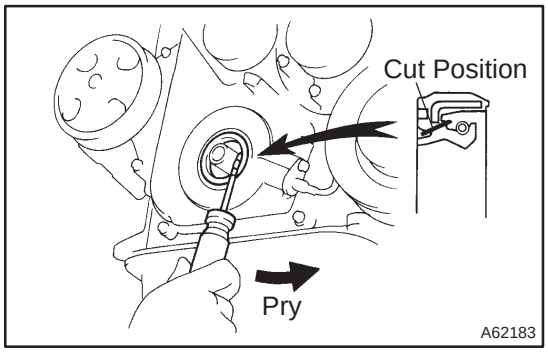


**9. REMOVE TIMING GEAR COVER OIL SEAL**

(a) Using a knife, cut off the oil seal lip.

(b) Using a screwdriver with the tip wrapped in tape, pry out the oil seal.

**NOTICE:**

**After the removal, check if the crankshaft is not damaged. If it is damaged, smooth the surface with 400–grit sandpaper.**

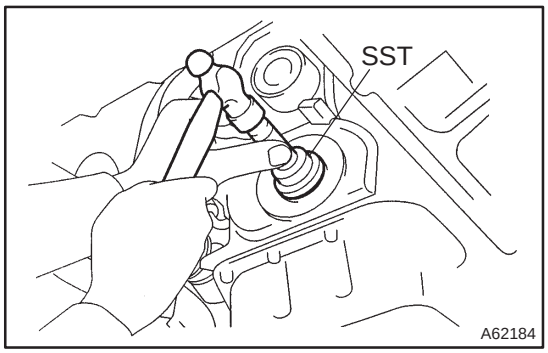


**10. INSTALL TIMING GEAR COVER OIL SEAL**

(a) Apply MP grease to a new oil seal lip.

**NOTICE:**

**Keep the lip free of foreign objects.**

(b) Using SST, tap in the oil seal until its surface is flush with the timing chain cover edge.
SST 09223–22010

**NOTICE:**

**Wipe off extra grease on the crankshaft.**

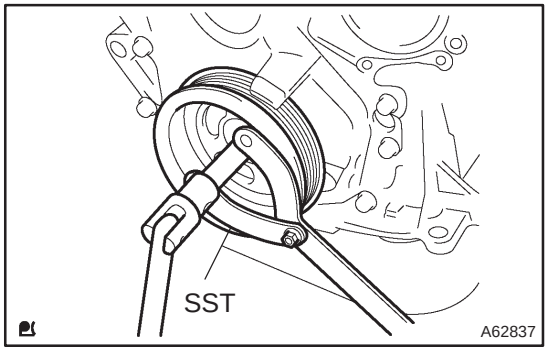


**11. INSTALL CRANKSHAFT PULLEY**

(a) Align the keyway of the pulley with the key located on the crankshaft and slide the pulley into place.

(b) Using SST, install the crankshaft pulley bolt.
SST 09960–10010 (09962–01000, 09963–01000)
**Torque: 138 N·m (1,407 kgf·cm, 102 ft·lbf)**

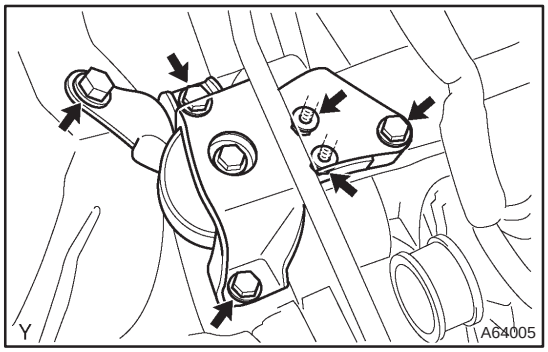


**12. INSTALL ENGINE MOUNTING INSULATOR SUB–ASSY RH**

(a) Install the engine mounting insulator with the 4 bolts and 2 nuts.
**Torque: 52 N·m (530 kgf·cm, 38 ft·lbf)**

**13. INSTALL FRONT WHEEL RH**
**Torque: 103 N·m (1,050 kgf·cm, 76 ft·lbf)**

**14. CHECK FOR ENGINE OIL LEAKS**

cardiagn.com

# TIMING GEAR CASE OR TIMING CHAIN CASE OIL SEAL (1AZ–FE)

141BH–01

## REPLACEMENT

1. **REMOVE FRONT WHEEL RH**
2. **REMOVE RADIATOR SUPPORT OPENING COVER**
3. **REMOVE ENGINE ROOM COVER SIDE**
4. **REMOVE ENGINE UNDER COVER RH**

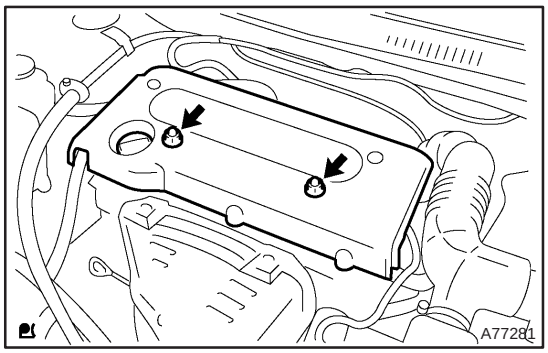


5. **REMOVE ENGINE COVER SUB–ASSY NO.1**

(a) Remove the 2 nuts and the engine cover No. 1.

6. **REMOVE FAN AND GENERATOR V BELT (See page 14–105)**

SST 09249–63010

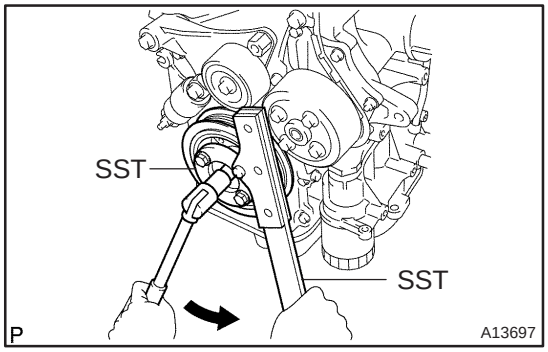


7. **REMOVE CRANKSHAFT PULLEY**

(a) Using SST, loosen the pulley bolt.

SST 09213–54015 (91651–60855), 09330–00021,

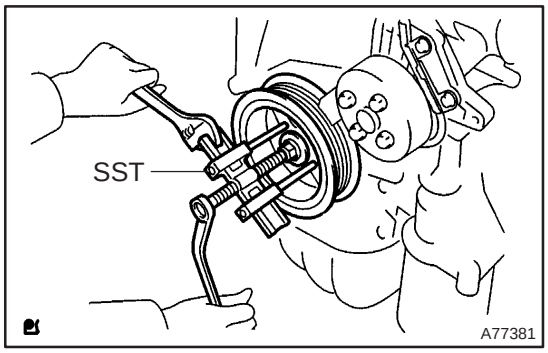


(b) Using SST, remove the crankshaft pulley.

SST 09950–50013 (09951–05010, 09952–05010, 09953–05020, 09954–05021)

cardiagn.com

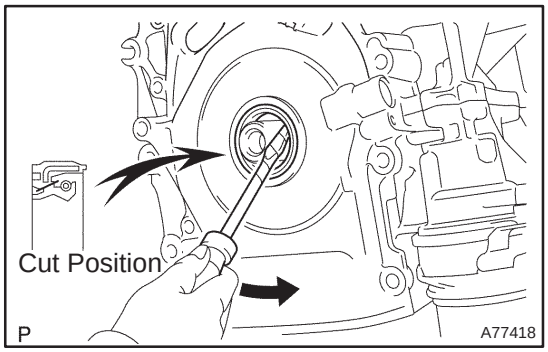


**8. REMOVE TIMING GEAR CASE OR TIMING CHAIN CASE OIL SEAL**

(a) Using a screwdriver with tip wrapped in the tape, pry out the oil seal.

HINT:

After removal, check if the crankshaft is not damaged.

If it is damaged, smooth the surface with 400–grit sandpaper.

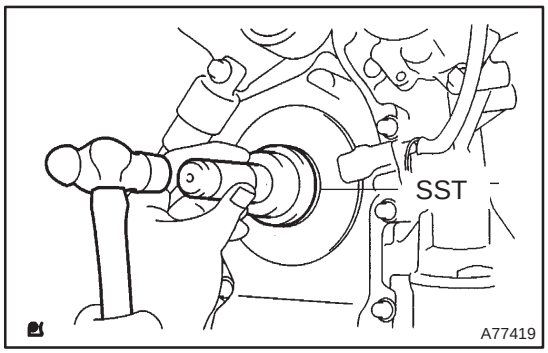


**9. INSTALL TIMING GEAR CASE OR TIMING CHAIN CASE OIL SEAL**

(a) Apply MP grease to a new oil seal lip.

**NOTICE:**

**Keep the lip off foreign materials.**

(b) Using SST and a hammer, tap in the oil seal until its surface is flush with the rear oil seal retainer edge.

SST 09223–22010

**NOTICE:**

**Wipe off extra grease on the crankshaft.**

**10. INSTALL CRANKSHAFT PULLEY**

(a) Align the pulley set key with the key groove of the pulley.

(b) Using SST, install the pulley bolt.

SST 09213–54015 (91651–60855), 09330–00021

**Torque: 170 N·m (1,733 kgf·cm, 125 ft·lbf)**

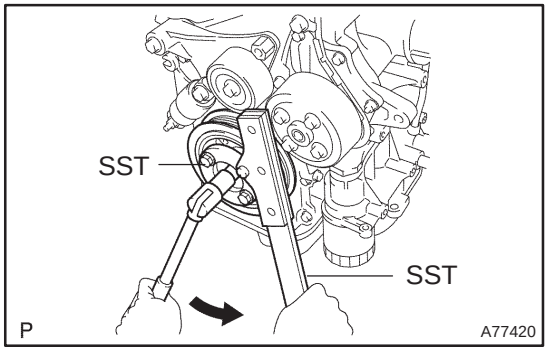


**11. INSTALL FAN AND GENERATOR V BELT (See page 14–105)**

SST 09249–63010

**12. INSTALL ENGINE COVER SUB–ASSY NO.1**

**Torque: 7.0 N·m (71 kgf·cm, 62 in.·lbf)**

**13. INSTALL FRONT WHEEL RH**

**Torque: 103 N·m (1,050 kgf·cm, 76 ft·lbf)**

**14. CHECK FOR ENGINE OIL LEAKS**

cardiagn.com

# TIMING GEAR CASE OR TIMING CHAIN CASE OIL SEAL (1AZ–FSE)

141BR–01

## REPLACEMENT

1. **REMOVE FRONT WHEEL RH**
2. **REMOVE RADIATOR SUPPORT OPENING COVER**
3. **REMOVE ENGINE ROOM COVER SIDE**
4. **REMOVE ENGINE UNDER COVER RH**

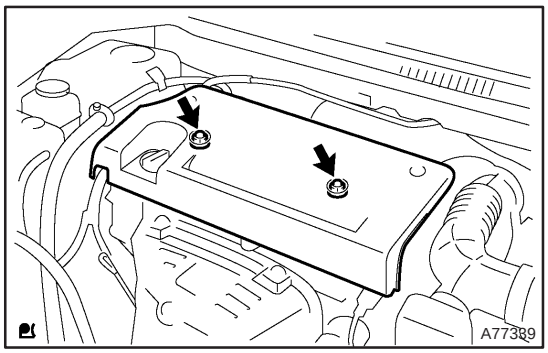


5. **REMOVE ENGINE COVER SUB–ASSY NO.1**

(a) Remove the 2 nuts and the engine cover No. 1.

6. **REMOVE FAN AND GENERATOR V BELT (See page 14–185)**

SST 09249–63010

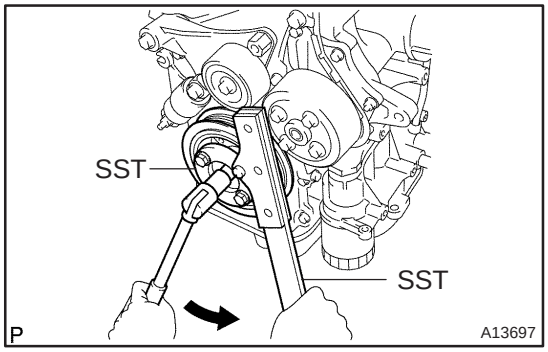


7. **REMOVE CRANKSHAFT PULLEY**

(a) Using SST, loosen the pulley bolt.

SST 09213–54015 (91651–60855), 09330–00021

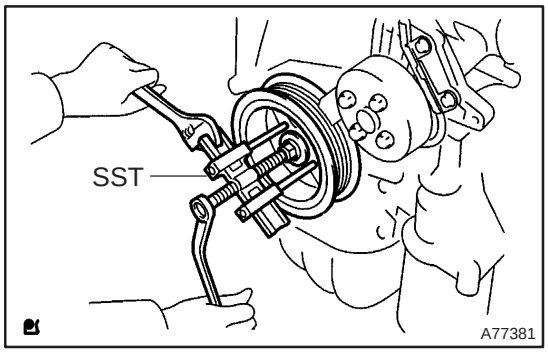


(b) Using SST, remove the crankshaft pulley.

SST 09950–50013 (09951–05010, 09952–05010, 09953–05020, 09954–05021)

cardiagn.com

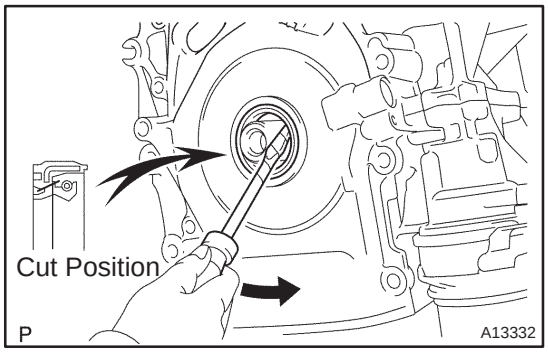


**8. REMOVE TIMING GEAR CASE OR TIMING CHAIN CASE OIL SEAL**

(a) Using a screwdriver with tip wrapped in the tape, pry out the oil seal.

HINT:

After removal, check if the crankshaft is not damaged.

If it is damaged, smooth the surface with 400–grit sandpaper.

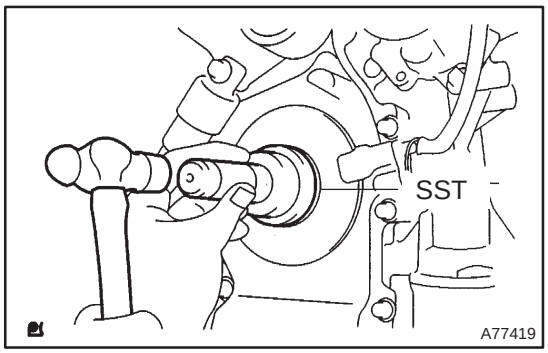


**9. INSTALL TIMING GEAR CASE OR TIMING CHAIN CASE OIL SEAL**

(a) Apply MP grease to a new oil seal lip.

**NOTICE:**

**Keep the lip off foreign materials.**

(b) Using SST and a hammer, tap in the oil seal until its surface is flush with the rear oil seal retainer edge.

SST 09223–22010

**NOTICE:**

**Wipe off extra grease on the crankshaft.**

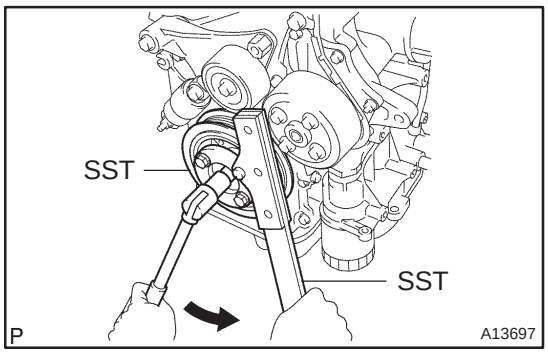


**10. INSTALL CRANKSHAFT PULLEY**

(a) Align the pulley set key with the key groove of the pulley.

(b) Using SST, install the pulley bolt.

SST 09213–54015 (91651–60855), 09330–00021

**Torque: 170 N·m (1,733 kgf·cm, 125 ft·lbf)**

**11. INSTALL FAN AND GENERATOR V BELT (See page 14–185)**

SST 09249–63010

**12. INSTALL ENGINE COVER SUB–ASSY NO.1**

**Torque: 7.0 N·m (71 kgf·cm, 62 in.·lbf)**

**13. INSTALL FRONT WHEEL RH**

**Torque: 103 N·m (1,050 kgf·cm, 76 ft·lbf)**

**14. CHECK FOR ENGINE OIL LEAKS**

cardiagn.com

# VALVE CLEARANCE (1AZ–FE)

141B6–01

## ADJUSTMENT

**1. REMOVE RADIATOR SUPPORT OPENING COVER**

**2. REMOVE ENGINE ROOM COVER SIDE**

**3. REMOVE ENGINE UNDER COVER RH**

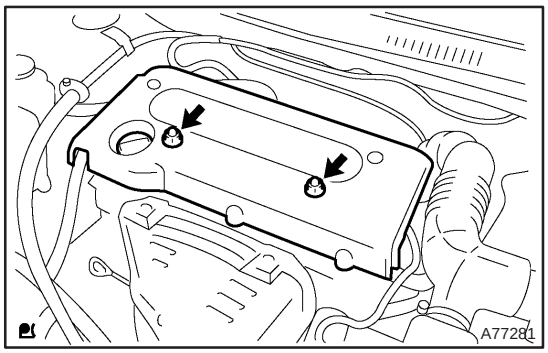


**4. REMOVE ENGINE COVER SUB–ASSY NO.1**

(a) Remove 2 nuts and the engine cover No. 1.

**5. REMOVE IGNITION COIL ASSY**

(a) Remove 4 bolts and the ignition coils.

**6. REMOVE CYLINDER HEAD COVER SUB–ASSY (See page 14–171)**

**7. SET NO. 1 CYLINDER TO TDC/COMPRESSION (See page 14–171)**

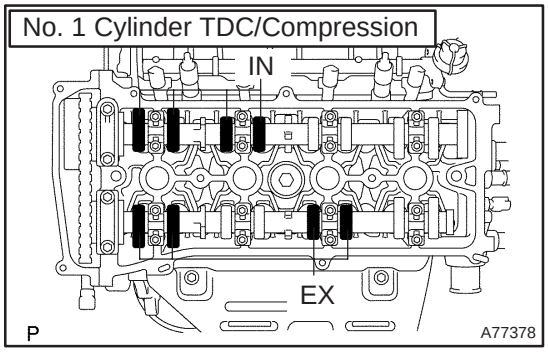


**8. INSPECT VALVE CLEARANCE**

HINT:

Inspect and adjust the valve clearance when the engine is cold.

(a) Check only the valve indicated in the illustration.

(1) Using a feeler gauge, measure the clearance between the valve lifter and camshaft.

(2) Record the out–of specification valve clearance measurements. They will be used later to determine the required replacement adjusting shim.

**Valve clearance (Cold):**

**Intake 0.19 to 0.29 mm (0.0075 to 0.0114 in.)**

**Exhaust 0.30 to 0.40 mm (0.0118 to 0.0157 in.)**

(b) Turn the crankshaft clockwise 1 revolution (360°) and set No. 4 cylinder to TDC/compression.

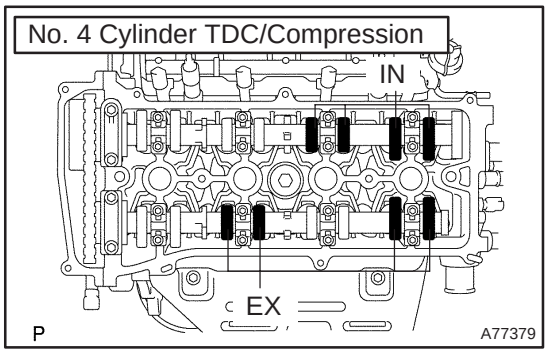


(c) Check only the valve indicated in the illustration.

(1) Using a feeler gauge, measure the clearance between the valve lifter and camshaft.

(2) Record the out–of specification valve clearance measurements. They will be used later to determine the required replacement adjusting shim.

**Valve clearance (Cold):**

**Intake 0.19 to 0.29 mm (0.0075 to 0.0114 in.)**

**Exhaust 0.30 to 0.40 mm (0.0118 to 0.0157 in.)**

cardiagn.com

## 9. ADJUST VALVE CLEARANCE

**NOTICE:**

**Be sure not to turn the crankshaft without the chain tensioner.**

(a) Set the No. 1 cylinder to TDC/compression. (See page 14–171)

(b) Remove the chain tensioner. (See page 14–171)

(c) Remove the camshafts. (See page 14–171)

(d) Tie the timing chain with a string.

**NOTICE:**

**Be careful not to drop anything inside the timing chain cover.**

(e) Remove the valve lifters.

(f) Using a micrometer, measure the thickness of the removed lifter.

(g) Calculate the thickness of a new lifter so that the valve clearance comes within the specified valve.

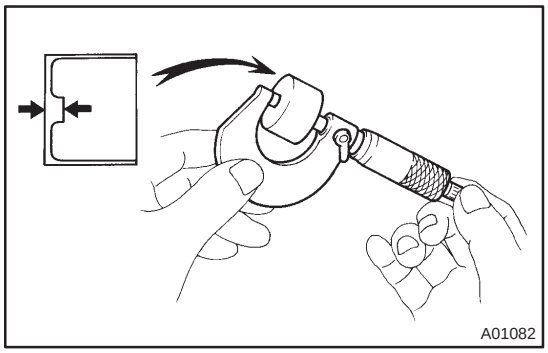


| | |
|---|---|
| A | Thickness of new lifter |
| B | Thickness of used lifter |
| C | Measured valve clearance |

**Valve clearance:**

**Intake: A = B + (C – 0.24 mm (0.0094 in.))**

**Exhaust: A = B + (C – 0.35 mm (0.0138 in.))**

EXAMPLE: (Intake)
Measure valve clearance = 0.44 mm (0.0173 in.)
0.44 mm (0.0173 in.) – 0.24 mm (0.0094 in.) = 0.20 mm (0.0079 in.)
(Measured – Specification = Excess clearance)
Used shim measurement = 5.30 mm (0.2087 in.)
0.20 mm (0.0079 in.) + 5.30 mm (0.2087 in.) = 5.50 mm (0.2165 in.)
(Excess clearance + Used shim = Ideal new shim)
Closest new shim = 5.50 mm (0.2165 in.) = Shim No. ”50”

HINT:

- Select a new lifter with a thickness as close as possible to the calculated valves.
- Lifter are available in 35 sizes in increments of 0.020 mm (0.0008 in.), from 5.060 mm (0.1992 in.) to 5.740 mm (0.2260 in.).

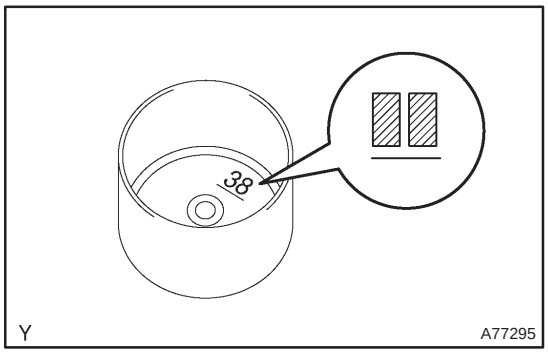


- Identification number inside the valve lifter shows the value of the 2 decimal places. (The illustration shows 5.380 mm (0.2118 in.))
- Refer to the New Lifter Thickness table on the next 2 pages.



cardiagn.com

## Valve Lifter Selection Chart (Intake)

| Measure clearance mm (in.) \ Installed lifter thickness mm (in.) | 5.060 (0.1992) | 5.080 (0.2000) | 5.100 (0.2008) | 5.120 (0.2016) | 5.140 (0.2024) | 5.160 (0.2031) | 5.180 (0.2039) | 5.200 (0.2047) | 5.210 (0.2051) | 5.220 (0.2055) | 5.230 (0.2059) | 5.240 (0.2063) | 5.250 (0.2067) | 5.260 (0.2071) | 5.270 (0.2075) | 5.280 (0.2079) | 5.290 (0.2083) | 5.300 (0.2087) | 5.310 (0.2091) | 5.320 (0.2094) | 5.330 (0.2098) | 5.340 (0.2102) | 5.350 (0.2106) | 5.360 (0.2110) | 5.370 (0.2114) | 5.380 (0.2118) | 5.390 (0.2122) | 5.400 (0.2126) | 5.410 (0.2130) | 5.420 (0.2134) | 5.430 (0.2138) | 5.440 (0.2142) | 5.450 (0.2146) | 5.460 (0.2150) | 5.470 (0.2154) | 5.480 (0.2157) | 5.490 (0.2161) | 5.500 (0.2165) | 5.510 (0.2169) | 5.520 (0.2173) | 5.530 (0.2177) | 5.540 (0.2181) | 5.550 (0.2185) | 5.560 (0.2189) | 5.570 (0.2193) | 5.580 (0.2197) | 5.590 (0.2201) | 5.600 (0.2205) | 5.620 (0.2213) | 5.640 (0.2220) | 5.660 (0.2228) | 5.680 (0.2236) | 5.700 (0.2244) | 5.720 (0.2252) | 5.740 (0.2260) |
|---|---|---|---|---|---|---|---|---|---|---|---|---|---|---|---|---|---|---|---|---|---|---|---|---|---|---|---|---|---|---|---|---|---|---|---|---|---|---|---|---|---|---|---|---|---|---|---|---|---|---|---|---|---|---|---|---|---|---|
| 0.000–0.030 (0.0000–0.0012) | | | | | | | | | | | | | 06 | 06 | 08 | 08 | 10 | 10 | 12 | 12 | 14 | 14 | 16 | 16 | 18 | 18 | 20 | 20 | 22 | 22 | 24 | 24 | 26 | 26 | 28 | 28 | 30 | 30 | 32 | 32 | 34 | 34 | 36 | 36 | 38 | 38 | 40 | 40 | 42 | 44 | 46 | 48 | 50 | 52 | 54 |
| 0.031–0.050 (0.0012–0.0020) | | | | | | | | | 06 | 06 | 06 | 08 | 08 | 10 | 10 | 12 | 12 | 14 | 14 | 16 | 16 | 18 | 18 | 20 | 20 | 22 | 22 | 24 | 24 | 26 | 26 | 28 | 28 | 30 | 30 | 32 | 32 | 34 | 34 | 36 | 36 | 38 | 38 | 40 | 40 | 42 | 42 | 44 | 46 | 48 | 50 | 52 | 54 | 56 | 58 |
| 0.051–0.070 (0.0020–0.0028) | | | | | | | | 06 | 08 | 08 | 08 | 10 | 10 | 12 | 12 | 14 | 14 | 16 | 16 | 18 | 18 | 20 | 20 | 22 | 22 | 24 | 24 | 26 | 26 | 28 | 28 | 30 | 30 | 32 | 32 | 34 | 34 | 36 | 36 | 38 | 38 | 40 | 40 | 42 | 42 | 44 | 44 | 46 | 48 | 50 | 52 | 54 | 56 | 58 | 60 |
| 0.071–0.090 (0.0028–0.0035) | | | | | | | 06 | 08 | 10 | 10 | 10 | 12 | 12 | 14 | 14 | 16 | 16 | 18 | 18 | 20 | 20 | 22 | 22 | 24 | 24 | 26 | 26 | 28 | 28 | 30 | 30 | 32 | 32 | 34 | 34 | 36 | 36 | 38 | 38 | 40 | 40 | 42 | 42 | 44 | 44 | 46 | 46 | 48 | 50 | 52 | 54 | 56 | 58 | 60 | 62 |
| 0.091–0.110 (0.0036–0.0043) | | | | | | 06 | 08 | 10 | 12 | 12 | 12 | 14 | 14 | 16 | 16 | 18 | 18 | 20 | 20 | 22 | 22 | 24 | 24 | 26 | 26 | 28 | 28 | 30 | 30 | 32 | 32 | 34 | 34 | 36 | 36 | 38 | 38 | 40 | 40 | 42 | 42 | 44 | 44 | 46 | 46 | 48 | 48 | 50 | 52 | 54 | 56 | 58 | 60 | 62 | 64 |
| 0.111–0.130 (0.0044–0.0051) | | | | | 06 | 08 | 10 | 12 | 14 | 14 | 14 | 16 | 16 | 18 | 18 | 20 | 20 | 22 | 22 | 24 | 24 | 26 | 26 | 28 | 28 | 30 | 30 | 32 | 32 | 34 | 34 | 36 | 36 | 38 | 38 | 40 | 40 | 42 | 42 | 44 | 44 | 46 | 46 | 48 | 48 | 50 | 50 | 52 | 54 | 56 | 58 | 60 | 62 | 64 | 66 |
| 0.131–0.150 (0.0052–0.0059) | | | | 06 | 08 | 10 | 12 | 14 | 16 | 16 | 16 | 18 | 18 | 20 | 20 | 22 | 22 | 24 | 24 | 26 | 26 | 28 | 28 | 30 | 30 | 32 | 32 | 34 | 34 | 36 | 36 | 38 | 38 | 40 | 40 | 42 | 42 | 44 | 44 | 46 | 46 | 48 | 48 | 50 | 50 | 52 | 52 | 54 | 56 | 58 | 60 | 62 | 64 | 66 | 68 |
| 0.151–0.170 (0.0059–0.0067) | | | 06 | 08 | 10 | 12 | 14 | 16 | 18 | 18 | 18 | 20 | 20 | 22 | 22 | 24 | 24 | 26 | 26 | 28 | 28 | 30 | 30 | 32 | 32 | 34 | 34 | 36 | 36 | 38 | 38 | 40 | 40 | 42 | 42 | 44 | 44 | 46 | 46 | 48 | 48 | 50 | 50 | 52 | 52 | 54 | 54 | 56 | 58 | 60 | 62 | 64 | 66 | 68 | 70 |
| 0.171–0.189 (0.0067–0.0074) | | 06 | 08 | 10 | 12 | 14 | 16 | 18 | 20 | 20 | 20 | 22 | 22 | 24 | 24 | 26 | 26 | 28 | 28 | 30 | 30 | 32 | 32 | 34 | 34 | 36 | 36 | 38 | 38 | 40 | 40 | 42 | 42 | 44 | 44 | 46 | 46 | 48 | 48 | 50 | 50 | 52 | 52 | 54 | 54 | 56 | 56 | 58 | 60 | 62 | 64 | 66 | 68 | 70 | 72 |
| 0.190–0.290 (0.0075–0.0114) | | | | | | | | | | | | | | | | | | | | | | | | | | | | | | | | | | | | | | | | | | | | | | | | | | | | | | | | | | |
| 0.291–0.310 (0.0115–0.0122) | 12 | 14 | 16 | 18 | 20 | 22 | 24 | 26 | 28 | 28 | 30 | 30 | 32 | 32 | 34 | 34 | 36 | 36 | 38 | 38 | 40 | 40 | 42 | 42 | 44 | 44 | 46 | 46 | 48 | 48 | 50 | 50 | 52 | 52 | 54 | 54 | 56 | 56 | 58 | 58 | 60 | 60 | 62 | 62 | 64 | 64 | 66 | 66 | 68 | 70 | 72 | 74 | 74 | 74 |
| 0.311–0.330 (0.0122–0.0130) | 14 | 16 | 18 | 20 | 22 | 24 | 26 | 28 | 30 | 30 | 32 | 32 | 34 | 34 | 36 | 36 | 38 | 38 | 40 | 40 | 42 | 42 | 44 | 44 | 46 | 46 | 48 | 48 | 50 | 50 | 52 | 52 | 54 | 54 | 56 | 56 | 58 | 58 | 60 | 60 | 62 | 62 | 64 | 64 | 66 | 66 | 68 | 68 | 70 | 72 | 74 | 74 | 74 | |
| 0.331–0.350 (0.0130–0.0138) | 16 | 18 | 20 | 22 | 24 | 26 | 28 | 30 | 32 | 32 | 34 | 34 | 36 | 36 | 38 | 38 | 40 | 40 | 42 | 42 | 44 | 44 | 46 | 46 | 48 | 48 | 50 | 50 | 52 | 52 | 54 | 54 | 56 | 56 | 58 | 58 | 60 | 60 | 62 | 62 | 64 | 64 | 66 | 66 | 68 | 68 | 70 | 70 | 72 | 74 | 74 | 74 | | |
| 0.351–0.370 (0.0138–0.0146) | 18 | 20 | 22 | 24 | 26 | 28 | 30 | 32 | 34 | 34 | 36 | 36 | 38 | 38 | 40 | 40 | 42 | 42 | 44 | 44 | 46 | 46 | 48 | 48 | 50 | 50 | 52 | 52 | 54 | 54 | 56 | 56 | 58 | 58 | 60 | 60 | 62 | 62 | 64 | 64 | 66 | 66 | 68 | 68 | 70 | 70 | 72 | 72 | 74 | 74 | 74 | | | |
| 0.371–0.390 (0.0146–0.0154) | 20 | 22 | 24 | 26 | 28 | 30 | 32 | 34 | 36 | 36 | 38 | 38 | 40 | 40 | 42 | 42 | 44 | 44 | 46 | 46 | 48 | 48 | 50 | 50 | 52 | 52 | 54 | 54 | 56 | 56 | 58 | 58 | 60 | 60 | 62 | 62 | 64 | 64 | 66 | 66 | 68 | 68 | 70 | 70 | 72 | 72 | 74 | 74 | 74 | 74 | | | | |
| 0.391–0.410 (0.0154–0.0161) | 22 | 24 | 26 | 28 | 30 | 32 | 34 | 36 | 38 | 38 | 40 | 40 | 42 | 42 | 44 | 44 | 46 | 46 | 48 | 48 | 50 | 50 | 52 | 52 | 54 | 54 | 56 | 56 | 58 | 58 | 60 | 60 | 62 | 62 | 64 | 64 | 66 | 66 | 68 | 68 | 70 | 70 | 72 | 72 | 74 | 74 | 74 | 74 | | | | | | |
| 0.411–0.430 (0.0162–0.0169) | 24 | 26 | 28 | 30 | 32 | 34 | 36 | 38 | 40 | 40 | 42 | 42 | 44 | 44 | 46 | 46 | 48 | 48 | 50 | 50 | 52 | 52 | 54 | 54 | 56 | 56 | 58 | 58 | 60 | 60 | 62 | 62 | 64 | 64 | 66 | 66 | 68 | 68 | 70 | 70 | 72 | 72 | 74 | 74 | 74 | 74 | | | | | | | | |
| 0.431–0.450 (0.0170–0.0177) | 26 | 28 | 30 | 32 | 34 | 36 | 38 | 40 | 42 | 42 | 44 | 44 | 46 | 46 | 48 | 48 | 50 | 50 | 52 | 52 | 54 | 54 | 56 | 56 | 58 | 58 | 60 | 60 | 62 | 62 | 64 | 64 | 66 | 66 | 68 | 68 | 70 | 70 | 72 | 72 | 74 | 74 | 74 | 74 | | | | | | | | | | |
| 0.451–0.470 (0.0178–0.0185) | 28 | 30 | 32 | 34 | 36 | 38 | 40 | 42 | 44 | 44 | 46 | 46 | 48 | 48 | 50 | 50 | 52 | 52 | 54 | 54 | 56 | 56 | 58 | 58 | 60 | 60 | 62 | 62 | 64 | 64 | 66 | 66 | 68 | 68 | 70 | 70 | 72 | 72 | 74 | 74 | 74 | 74 | | | | | | | | | | | | |
| 0.471–0.490 (0.0185–0.0193) | 30 | 32 | 34 | 36 | 38 | 40 | 42 | 44 | 46 | 46 | 48 | 48 | 50 | 50 | 52 | 52 | 54 | 54 | 56 | 56 | 58 | 58 | 60 | 60 | 62 | 62 | 64 | 64 | 66 | 66 | 68 | 68 | 70 | 70 | 72 | 72 | 74 | 74 | 74 | 74 | | | | | | | | | | | | | | |
| 0.491–0.510 (0.0193–0.0201) | 32 | 34 | 36 | 38 | 40 | 42 | 44 | 46 | 48 | 48 | 50 | 50 | 52 | 52 | 54 | 54 | 56 | 56 | 58 | 58 | 60 | 60 | 62 | 62 | 64 | 64 | 66 | 66 | 68 | 68 | 70 | 70 | 72 | 72 | 74 | 74 | 74 | 74 | | | | | | | | | | | | | | | | |
| 0.511–0.530 (0.0201–0.0209) | 34 | 36 | 38 | 40 | 42 | 44 | 46 | 48 | 50 | 50 | 52 | 52 | 54 | 54 | 56 | 56 | 58 | 58 | 60 | 60 | 62 | 62 | 64 | 64 | 66 | 66 | 68 | 68 | 70 | 70 | 72 | 72 | 74 | 74 | 74 | 74 | | | | | | | | | | | | | | | | | | |
| 0.531–0.550 (0.0209–0.0217) | 36 | 38 | 40 | 42 | 44 | 46 | 48 | 50 | 52 | 52 | 54 | 54 | 56 | 56 | 58 | 58 | 60 | 60 | 62 | 62 | 64 | 64 | 66 | 66 | 68 | 68 | 70 | 70 | 72 | 72 | 74 | 74 | 74 | 74 | | | | | | | | | | | | | | | | | | | | |
| 0.551–0.570 (0.0217–0.0224) | 38 | 40 | 42 | 44 | 46 | 48 | 50 | 52 | 54 | 54 | 56 | 56 | 58 | 58 | 60 | 60 | 62 | 62 | 64 | 64 | 66 | 66 | 68 | 68 | 70 | 70 | 72 | 72 | 74 | 74 | 74 | 74 | | | | | | | | | | | | | | | | | | | | |
| 0.571–0.590 (0.0225–0.0232) | 40 | 42 | 44 | 46 | 48 | 50 | 52 | 54 | 56 | 56 | 58 | 58 | 60 | 60 | 62 | 62 | 64 | 64 | 66 | 66 | 68 | 68 | 70 | 70 | 72 | 72 | 74 | 74 | 74 | 74 | | | | | | | | | | | | | | | | | | | | | | |
| 0.591–0.610 (0.0233–0.0240) | 42 | 44 | 46 | 48 | 50 | 52 | 54 | 56 | 58 | 58 | 60 | 60 | 62 | 62 | 64 | 64 | 66 | 66 | 68 | 68 | 70 | 70 | 72 | 72 | 74 | 74 | 74 | 74 | | | | | | | | | | | | | | | | | | | | | | | | |
| 0.611–0.630 (0.0241–0.0248) | 44 | 46 | 48 | 50 | 52 | 54 | 56 | 58 | 60 | 60 | 62 | 62 | 64 | 64 | 66 | 66 | 68 | 68 | 70 | 70 | 72 | 72 | 74 | 74 | 74 | 74 | | | | | | | | | | | | | | | | | | | | | | | | | | |
| 0.631–0.650 (0.0248–0.0256) | 46 | 48 | 50 | 52 | 54 | 56 | 58 | 60 | 62 | 62 | 64 | 64 | 66 | 66 | 68 | 68 | 70 | 70 | 72 | 72 | 74 | 74 | 74 | 74 | | | | | | | | | | | | | | | | | | | | | | | | | | | | |
| 0.651–0.670 (0.0256–0.0264) | 48 | 50 | 52 | 54 | 56 | 58 | 60 | 62 | 64 | 64 | 66 | 66 | 68 | 68 | 70 | 70 | 72 | 72 | 74 | 74 | 74 | 74 | | | | | | | | | | | | | | | | | | | | | | | | | | | | | | |
| 0.671–0.690 (0.0264–0.0272) | 50 | 52 | 54 | 56 | 58 | 60 | 62 | 64 | 66 | 66 | 68 | 68 | 70 | 70 | 72 | 72 | 74 | 74 | 74 | 74 | | | | | | | | | | | | | | | | | | | | | | | | | | | | | | | | |
| 0.691–0.710 (0.0272–0.0280) | 52 | 54 | 56 | 58 | 60 | 62 | 64 | 66 | 68 | 68 | 70 | 70 | 72 | 72 | 74 | 74 | 74 | 74 | | | | | | | | | | | | | | | | | | | | | | | | | | | | | | | | | | |
| 0.711–0.730 (0.0280–0.0287) | 54 | 56 | 58 | 60 | 62 | 64 | 66 | 68 | 70 | 70 | 72 | 72 | 74 | 74 | 74 | 74 | | | | | | | | | | | | | | | | | | | | | | | | | | | | | | | | | | | | |
| 0.731–0.750 (0.0288–0.0295) | 56 | 58 | 60 | 62 | 64 | 66 | 68 | 70 | 72 | 72 | 74 | 74 | 74 | 74 | | | | | | | | | | | | | | | | | | | | | | | | | | | | | | | | | | | | | | |
| 0.751–0.770 (0.0296–0.0303) | 58 | 60 | 62 | 64 | 66 | 68 | 70 | 72 | 74 | 74 | 74 | 74 | | | | | | | | | | | | | | | | | | | | | | | | | | | | | | | | | | | | | | | | |
| 0.771–0.790 (0.0304–0.0311) | 60 | 62 | 64 | 66 | 68 | 70 | 72 | 74 | 74 | 74 | | | | | | | | | | | | | | | | | | | | | | | | | | | | | | | | | | | | | | | | | | |
| 0.791–0.810 (0.0311–0.0319) | 62 | 64 | 66 | 68 | 70 | 72 | 74 | | | | | | | | | | | | | | | | | | | | | | | | | | | | | | | | | | | | | | | | | | | | | |
| 0.811–0.830 (0.0319–0.0327) | 64 | 66 | 68 | 70 | 72 | 74 | | | | | | | | | | | | | | | | | | | | | | | | | | | | | | | | | | | | | | | | | | | | | | |
| 0.831–0.850 (0.0327–0.0335) | 66 | 68 | 70 | 72 | 74 | | | | | | | | | | | | | | | | | | | | | | | | | | | | | | | | | | | | | | | | | | | | | | | |
| 0.851–0.870 (0.0335–0.0343) | 68 | 70 | 72 | 74 | | | | | | | | | | | | | | | | | | | | | | | | | | | | | | | | | | | | | | | | | | | | | | | | |
| 0.871–0.890 (0.0343–0.0350) | 70 | 72 | 74 | | | | | | | | | | | | | | | | | | | | | | | | | | | | | | | | | | | | | | | | | | | | | | | | | |
| 0.891–0.910 (0.0351–0.0358) | 72 | 74 | | | | | | | | | | | | | | | | | | | | | | | | | | | | | | | | | | | | | | | | | | | | | | | | | | |
| 0.911–0.930 (0.0359–0.0366) | 74 | | | | | | | | | | | | | | | | | | | | | | | | | | | | | | | | | | | | | | | | | | | | | | | | | | | |

New Lifter Thickness — mm (in.)

| Lifter No. | Thickness | Lifter No. | Thickness | Lifter No. | Thickness |
|---|---|---|---|---|---|
| 06 | 5.060 (0.1992) | 30 | 5.300 (0.2087) | 54 | 5.540 (0.2181) |
| 08 | 5.080 (0.2000) | 32 | 5.320 (0.2094) | 56 | 5.560 (0.2189) |
| 10 | 5.100 (0.2008) | 34 | 5.340 (0.2102) | 58 | 5.580 (0.2197) |
| 12 | 5.120 (0.2016) | 36 | 5.360 (0.2110) | 60 | 5.600 (0.2205) |
| 14 | 5.140 (0.2024) | 38 | 5.380 (0.2118) | 62 | 5.620 (0.2213) |
| 16 | 5.160 (0.2031) | 40 | 5.400 (0.2126) | 64 | 5.640 (0.2220) |
| 18 | 5.180 (0.2039) | 42 | 5.420 (0.2134) | 66 | 5.660 (0.2228) |
| 20 | 5.200 (0.2047) | 44 | 5.440 (0.2142) | 68 | 5.680 (0.2236) |
| 22 | 5.220 (0.2055) | 46 | 5.460 (0.2150) | 70 | 5.700 (0.2244) |
| 24 | 5.240 (0.2063) | 48 | 5.480 (0.2157) | 72 | 5.720 (0.2252) |
| 26 | 5.260 (0.2071) | 50 | 5.500 (0.2165) | 74 | 5.740 (0.2260) |
| 28 | 5.280 (0.2079) | 52 | 5.520 (0.2173) | | |

**Intake valve clearance (Cold):**
**0.19 to 0.29 mm (0.008 to 0.011 in.)**

EXAMPLE:

The 5.250 mm (0.2067 in.) lifter is installed, and the measured clearance is 0.400 mm (0.0157 in.).

Replace the 5.250 mm (0.2067 in.) lifter with a new No. 42 lifter.

A77296



cardiagn.com

## Valve Lifter Selection Chart (Exhaust)

| Measure clearance mm (in.) \ Installed lifter thickness mm (in.) | 5.060 (0.1992) | 5.080 (0.2000) | 5.100 (0.2008) | 5.120 (0.2016) | 5.140 (0.2024) | 5.160 (0.2031) | 5.180 (0.2039) | 5.200 (0.2047) | 5.210 (0.2051) | 5.220 (0.2055) | 5.230 (0.2059) | 5.240 (0.2063) | 5.250 (0.2067) | 5.260 (0.2071) | 5.270 (0.2075) | 5.280 (0.2079) | 5.290 (0.2083) | 5.300 (0.2087) | 5.310 (0.2091) | 5.320 (0.2094) | 5.330 (0.2098) | 5.340 (0.2102) | 5.350 (0.2106) | 5.360 (0.2110) | 5.370 (0.2114) | 5.380 (0.2118) | 5.390 (0.2122) | 5.400 (0.2126) | 5.410 (0.2130) | 5.420 (0.2134) | 5.430 (0.2138) | 5.440 (0.2142) | 5.450 (0.2146) | 5.460 (0.2150) | 5.470 (0.2154) | 5.480 (0.2157) | 5.490 (0.2161) | 5.500 (0.2165) | 5.510 (0.2169) | 5.520 (0.2173) | 5.530 (0.2177) | 5.540 (0.2181) | 5.550 (0.2185) | 5.560 (0.2189) | 5.570 (0.2193) | 5.580 (0.2197) | 5.590 (0.2201) | 5.600 (0.2205) | 5.620 (0.2213) | 5.640 (0.2220) | 5.660 (0.2228) | 5.680 (0.2236) | 5.700 (0.2244) | 5.720 (0.2252) | 5.740 (0.2260) |
|---|---|---|---|---|---|---|---|---|---|---|---|---|---|---|---|---|---|---|---|---|---|---|---|---|---|---|---|---|---|---|---|---|---|---|---|---|---|---|---|---|---|---|---|---|---|---|---|---|---|---|---|---|---|---|---|---|---|
| 0.000–0.030 (0.0000–0.0012) | | | | | | | | | | | | | | | | | | | | | | | 06 | 06 | 08 | 08 | 10 | 10 | 12 | 12 | 14 | 14 | 16 | 16 | 18 | 18 | 20 | 20 | 22 | 22 | 24 | 24 | 26 | 26 | 28 | 28 | 30 | 30 | 32 | 34 | 36 | 38 | 40 | 42 | 44 |
| 0.031–0.050 (0.0012–0.0020) | | | | | | | | | | | | | | | | | | | | | 06 | 06 | 08 | 08 | 10 | 10 | 12 | 12 | 14 | 14 | 16 | 16 | 18 | 18 | 20 | 20 | 22 | 22 | 24 | 24 | 26 | 26 | 28 | 28 | 30 | 30 | 32 | 32 | 34 | 36 | 38 | 40 | 42 | 44 | 46 |
| 0.051–0.070 (0.0020–0.0028) | | | | | | | | | | | | | | | | | | 06 | 06 | 08 | 08 | 10 | 10 | 12 | 12 | 14 | 14 | 16 | 16 | 18 | 18 | 20 | 20 | 22 | 22 | 24 | 24 | 26 | 26 | 28 | 28 | 30 | 30 | 32 | 32 | 34 | 34 | 36 | 38 | 40 | 42 | 44 | 46 | 48 |
| 0.071–0.090 (0.0028–0.0035) | | | | | | | | | | | | | | | | | 06 | 06 | 08 | 08 | 10 | 10 | 12 | 12 | 14 | 14 | 16 | 16 | 18 | 18 | 20 | 20 | 22 | 22 | 24 | 24 | 26 | 26 | 28 | 28 | 30 | 30 | 32 | 32 | 34 | 34 | 36 | 36 | 38 | 40 | 42 | 44 | 46 | 48 | 50 |
| 0.091–0.110 (0.0036–0.0043) | | | | | | | | | | | | | | | 06 | 06 | 08 | 08 | 10 | 10 | 12 | 12 | 14 | 14 | 16 | 16 | 18 | 18 | 20 | 20 | 22 | 22 | 24 | 24 | 26 | 26 | 28 | 28 | 30 | 30 | 32 | 32 | 34 | 34 | 36 | 36 | 38 | 38 | 40 | 42 | 44 | 46 | 48 | 50 | 52 |
| 0.111–0.130 (0.0044–0.0051) | | | | | | | | | | | | | 06 | 06 | 08 | 08 | 10 | 10 | 12 | 12 | 14 | 14 | 16 | 16 | 18 | 18 | 20 | 20 | 22 | 22 | 24 | 24 | 26 | 26 | 28 | 28 | 30 | 30 | 32 | 32 | 34 | 34 | 36 | 36 | 38 | 38 | 40 | 40 | 42 | 44 | 46 | 48 | 50 | 52 | 54 |
| 0.131–0.150 (0.0052–0.0059) | | | | | | | | | | | 06 | 06 | 08 | 08 | 10 | 10 | 12 | 12 | 14 | 14 | 16 | 16 | 18 | 18 | 20 | 20 | 22 | 22 | 24 | 24 | 26 | 26 | 28 | 28 | 30 | 30 | 32 | 32 | 34 | 34 | 36 | 36 | 38 | 38 | 40 | 40 | 42 | 42 | 44 | 46 | 48 | 50 | 52 | 54 | 56 |
| 0.151–0.170 (0.0059–0.0067) | | | | | | | | | 06 | 06 | 08 | 08 | 10 | 10 | 12 | 12 | 14 | 14 | 16 | 16 | 18 | 18 | 20 | 20 | 22 | 22 | 24 | 24 | 26 | 26 | 28 | 28 | 30 | 30 | 32 | 32 | 34 | 34 | 36 | 36 | 38 | 38 | 40 | 40 | 42 | 42 | 44 | 44 | 46 | 48 | 50 | 52 | 54 | 56 | 58 |
| 0.171–0.190 (0.0067–0.0075) | | | | | | | | 06 | 08 | 08 | 10 | 10 | 12 | 12 | 14 | 14 | 16 | 16 | 18 | 18 | 20 | 20 | 22 | 22 | 24 | 24 | 26 | 26 | 28 | 28 | 30 | 30 | 32 | 32 | 34 | 34 | 36 | 36 | 38 | 38 | 40 | 40 | 42 | 42 | 44 | 44 | 46 | 46 | 48 | 50 | 52 | 54 | 56 | 58 | 60 |
| 0.191–0.210 (0.0075–0.0083) | | | | | | | 06 | 08 | 10 | 10 | 12 | 12 | 14 | 14 | 16 | 16 | 18 | 18 | 20 | 20 | 22 | 22 | 24 | 24 | 26 | 26 | 28 | 28 | 30 | 30 | 32 | 32 | 34 | 34 | 36 | 36 | 38 | 38 | 40 | 40 | 42 | 42 | 44 | 44 | 46 | 46 | 48 | 48 | 50 | 52 | 54 | 56 | 58 | 60 | 62 |
| 0.211–0.230 (0.0083–0.0091) | | | | | | 06 | 08 | 10 | 12 | 12 | 14 | 14 | 16 | 16 | 18 | 18 | 20 | 20 | 22 | 22 | 24 | 24 | 26 | 26 | 28 | 28 | 30 | 30 | 32 | 32 | 34 | 34 | 36 | 36 | 38 | 38 | 40 | 40 | 42 | 42 | 44 | 44 | 46 | 46 | 48 | 48 | 50 | 50 | 52 | 54 | 56 | 58 | 60 | 62 | 64 |
| 0.231–0.250 (0.0091–0.0098) | | | | | 06 | 08 | 10 | 12 | 14 | 14 | 16 | 16 | 18 | 18 | 20 | 20 | 22 | 22 | 24 | 24 | 26 | 26 | 28 | 28 | 30 | 30 | 32 | 32 | 34 | 34 | 36 | 36 | 38 | 38 | 40 | 40 | 42 | 42 | 44 | 44 | 46 | 46 | 48 | 48 | 50 | 50 | 52 | 52 | 54 | 56 | 58 | 60 | 62 | 64 | 66 |
| 0.251–0.270 (0.0099–0.0106) | | | | 06 | 08 | 10 | 12 | 14 | 16 | 16 | 18 | 18 | 20 | 20 | 22 | 22 | 24 | 24 | 26 | 26 | 28 | 28 | 30 | 30 | 32 | 32 | 34 | 34 | 36 | 36 | 38 | 38 | 40 | 40 | 42 | 42 | 44 | 44 | 46 | 46 | 48 | 48 | 50 | 50 | 52 | 52 | 54 | 54 | 56 | 58 | 60 | 62 | 64 | 66 | 68 |
| 0.271–0.290 (0.0107–0.0114) | | | 06 | 08 | 10 | 12 | 14 | 16 | 18 | 18 | 20 | 20 | 22 | 22 | 24 | 24 | 26 | 26 | 28 | 28 | 30 | 30 | 32 | 32 | 34 | 34 | 36 | 36 | 38 | 38 | 40 | 40 | 42 | 42 | 44 | 44 | 46 | 46 | 48 | 48 | 50 | 50 | 52 | 52 | 54 | 54 | 56 | 56 | 58 | 60 | 62 | 64 | 66 | 68 | 70 |
| 0.291–0.299 (0.0115–0.0118) | | 06 | 08 | 10 | 12 | 14 | 16 | 18 | 20 | 20 | 22 | 22 | 24 | 24 | 26 | 26 | 28 | 28 | 30 | 30 | 32 | 32 | 34 | 34 | 36 | 36 | 38 | 38 | 40 | 40 | 42 | 42 | 44 | 44 | 46 | 46 | 48 | 48 | 50 | 50 | 52 | 52 | 54 | 54 | 56 | 56 | 58 | 58 | 60 | 62 | 64 | 66 | 68 | 70 | 72 |
| 0.300–0.400 (0.0118–0.0157) | | | | | | | | | | | | | | | | | | | | | | | | | | | | | | | | | | | | | | | | | | | | | | | | | | | | | | | | |
| 0.401–0.420 (0.0158–0.0165) | 12 | 14 | 16 | 18 | 20 | 22 | 24 | 26 | 26 | 28 | 28 | 30 | 30 | 32 | 32 | 34 | 34 | 36 | 36 | 38 | 38 | 40 | 40 | 42 | 42 | 44 | 44 | 46 | 46 | 48 | 48 | 50 | 50 | 52 | 52 | 54 | 54 | 56 | 56 | 58 | 58 | 60 | 60 | 62 | 62 | 64 | 64 | 66 | 68 | 70 | 72 | 74 | 74 | 74 |
| 0.421–0.440 (0.0166–0.0173) | 14 | 16 | 18 | 20 | 22 | 24 | 26 | 28 | 28 | 30 | 30 | 32 | 32 | 34 | 34 | 36 | 36 | 38 | 38 | 40 | 40 | 42 | 42 | 44 | 44 | 46 | 46 | 48 | 48 | 50 | 50 | 52 | 52 | 54 | 54 | 56 | 56 | 58 | 58 | 60 | 60 | 62 | 62 | 64 | 64 | 66 | 66 | 68 | 70 | 72 | 74 | 74 | 74 |
| 0.441–0.460 (0.0174–0.0181) | 16 | 18 | 20 | 22 | 24 | 26 | 28 | 30 | 30 | 32 | 32 | 34 | 34 | 36 | 36 | 38 | 38 | 40 | 40 | 42 | 42 | 44 | 44 | 46 | 46 | 48 | 48 | 50 | 50 | 52 | 52 | 54 | 54 | 56 | 56 | 58 | 58 | 60 | 60 | 62 | 62 | 64 | 64 | 66 | 66 | 68 | 68 | 70 | 72 | 74 | 74 | 74 | |
| 0.461–0.480 (0.0181–0.0189) | 18 | 20 | 22 | 24 | 26 | 28 | 30 | 32 | 32 | 34 | 34 | 36 | 36 | 38 | 38 | 40 | 40 | 42 | 42 | 44 | 44 | 46 | 46 | 48 | 48 | 50 | 50 | 52 | 52 | 54 | 54 | 56 | 56 | 58 | 58 | 60 | 60 | 62 | 62 | 64 | 64 | 66 | 66 | 68 | 68 | 70 | 70 | 72 | 74 | 74 | 74 | | |
| 0.481–0.500 (0.0189–0.0197) | 20 | 22 | 24 | 26 | 28 | 30 | 32 | 34 | 34 | 36 | 36 | 38 | 38 | 40 | 40 | 42 | 42 | 44 | 44 | 46 | 46 | 48 | 48 | 50 | 50 | 52 | 52 | 54 | 54 | 56 | 56 | 58 | 58 | 60 | 60 | 62 | 62 | 64 | 64 | 66 | 66 | 68 | 68 | 70 | 70 | 72 | 72 | 74 | 74 | 74 | | | |
| 0.501–0.520 (0.0197–0.0205) | 22 | 24 | 26 | 28 | 30 | 32 | 34 | 36 | 36 | 38 | 38 | 40 | 40 | 42 | 42 | 44 | 44 | 46 | 46 | 48 | 48 | 50 | 50 | 52 | 52 | 54 | 54 | 56 | 56 | 58 | 58 | 60 | 60 | 62 | 62 | 64 | 64 | 66 | 66 | 68 | 68 | 70 | 70 | 72 | 72 | 74 | 74 | 74 | 74 | | | | |
| 0.521–0.540 (0.0205–0.0213) | 24 | 26 | 28 | 30 | 32 | 34 | 36 | 38 | 38 | 40 | 40 | 42 | 42 | 44 | 44 | 46 | 46 | 48 | 48 | 50 | 50 | 52 | 52 | 54 | 54 | 56 | 56 | 58 | 58 | 60 | 60 | 62 | 62 | 64 | 64 | 66 | 66 | 68 | 68 | 70 | 70 | 72 | 72 | 74 | 74 | 76 | 76 | 74 | | | | | |
| 0.541–0.560 (0.0213–0.0220) | 26 | 28 | 30 | 32 | 34 | 36 | 38 | 40 | 40 | 42 | 42 | 44 | 44 | 46 | 46 | 48 | 48 | 50 | 50 | 52 | 52 | 54 | 54 | 56 | 56 | 58 | 58 | 60 | 60 | 62 | 62 | 64 | 64 | 66 | 66 | 68 | 68 | 70 | 70 | 72 | 72 | 74 | 74 | 74 | 74 | 74 | 74 | | | | | | |
| 0.561–0.580 (0.0221–0.0228) | 28 | 30 | 32 | 34 | 36 | 38 | 40 | 42 | 42 | 44 | 44 | 46 | 46 | 48 | 48 | 50 | 50 | 52 | 52 | 54 | 54 | 56 | 56 | 58 | 58 | 60 | 60 | 62 | 62 | 64 | 64 | 66 | 66 | 68 | 68 | 70 | 70 | 72 | 72 | 74 | 74 | 74 | 74 | 74 | 74 | | | | | | | | |
| 0.581–0.600 (0.0229–0.0236) | 30 | 32 | 34 | 36 | 38 | 40 | 42 | 44 | 44 | 46 | 46 | 48 | 48 | 50 | 50 | 52 | 52 | 54 | 54 | 56 | 56 | 58 | 58 | 60 | 60 | 62 | 62 | 64 | 64 | 66 | 66 | 68 | 68 | 70 | 70 | 72 | 72 | 74 | 74 | 74 | 74 | 74 | 74 | | | | | | | | | | |
| 0.601–0.620 (0.0237–0.0244) | 32 | 34 | 36 | 38 | 40 | 42 | 44 | 46 | 46 | 48 | 48 | 50 | 50 | 52 | 52 | 54 | 54 | 56 | 56 | 58 | 58 | 60 | 60 | 62 | 62 | 64 | 64 | 66 | 66 | 68 | 68 | 70 | 70 | 72 | 72 | 74 | 74 | 74 | 74 | 74 | 74 | | | | | | | | | | | | |
| 0.621–0.640 (0.0244–0.0252) | 34 | 36 | 38 | 40 | 42 | 44 | 46 | 48 | 48 | 50 | 50 | 52 | 52 | 54 | 54 | 56 | 56 | 58 | 58 | 60 | 60 | 62 | 62 | 64 | 64 | 66 | 66 | 68 | 68 | 70 | 70 | 72 | 72 | 74 | 74 | 74 | 74 | 74 | 74 | | | | | | | | | | | | | | |
| 0.641–0.660 (0.0252–0.0260) | 36 | 38 | 40 | 42 | 44 | 46 | 48 | 50 | 50 | 52 | 52 | 54 | 54 | 56 | 56 | 58 | 58 | 60 | 60 | 62 | 62 | 64 | 64 | 66 | 66 | 68 | 68 | 70 | 70 | 72 | 72 | 74 | 74 | 74 | 74 | 74 | 74 | | | | | | | | | | | | | | | | |
| 0.661–0.680 (0.0260–0.0268) | 38 | 40 | 42 | 44 | 46 | 48 | 50 | 52 | 52 | 54 | 54 | 56 | 56 | 58 | 58 | 60 | 60 | 62 | 62 | 64 | 64 | 66 | 66 | 68 | 68 | 70 | 70 | 72 | 72 | 74 | 74 | 74 | 74 | 74 | 74 | | | | | | | | | | | | | | | | | | |
| 0.681–0.700 (0.0268–0.0276) | 40 | 42 | 44 | 46 | 48 | 50 | 52 | 54 | 54 | 56 | 56 | 58 | 58 | 60 | 60 | 62 | 62 | 64 | 64 | 66 | 66 | 68 | 68 | 70 | 70 | 72 | 72 | 74 | 74 | 74 | 74 | 74 | 74 | | | | | | | | | | | | | | | | | | | | |
| 0.701–0.720 (0.0276–0.0283) | 42 | 44 | 46 | 48 | 50 | 52 | 54 | 56 | 56 | 58 | 58 | 60 | 60 | 62 | 62 | 64 | 64 | 66 | 66 | 68 | 68 | 70 | 70 | 72 | 72 | 74 | 74 | 74 | 74 | 74 | 74 | | | | | | | | | | | | | | | | | | | | | | |
| 0.721–0.740 (0.0284–0.0291) | 44 | 46 | 48 | 50 | 52 | 54 | 56 | 58 | 58 | 60 | 60 | 62 | 62 | 64 | 64 | 66 | 66 | 68 | 68 | 70 | 70 | 72 | 72 | 74 | 74 | 74 | 74 | 74 | 74 | | | | | | | | | | | | | | | | | | | | | | | | |
| 0.741–0.760 (0.0292–0.0299) | 46 | 48 | 50 | 52 | 54 | 56 | 58 | 60 | 60 | 62 | 62 | 64 | 64 | 66 | 66 | 68 | 68 | 70 | 70 | 72 | 72 | 74 | 74 | 74 | 74 | 74 | 74 | | | | | | | | | | | | | | | | | | | | | | | | | | |
| 0.761–0.780 (0.0300–0.0307) | 48 | 50 | 52 | 54 | 56 | 58 | 60 | 62 | 62 | 64 | 64 | 66 | 66 | 68 | 68 | 70 | 70 | 72 | 72 | 74 | 74 | 74 | 74 | 74 | 74 | | | | | | | | | | | | | | | | | | | | | | | | | | | | |
| 0.781–0.800 (0.0307–0.0315) | 50 | 52 | 54 | 56 | 58 | 60 | 62 | 64 | 64 | 66 | 66 | 68 | 68 | 70 | 70 | 72 | 72 | 74 | 74 | 74 | 74 | 74 | 74 | | | | | | | | | | | | | | | | | | | | | | | | | | | | |
| 0.801–0.820 (0.0315–0.0323) | 52 | 54 | 56 | 58 | 60 | 62 | 64 | 66 | 66 | 68 | 68 | 70 | 70 | 72 | 72 | 74 | 74 | 74 | 74 | 74 | 74 | | | | | | | | | | | | | | | | | | | | | | | | | | | | | | |
| 0.821–0.840 (0.0323–0.0331) | 54 | 56 | 58 | 60 | 62 | 64 | 66 | 68 | 68 | 70 | 70 | 72 | 72 | 74 | 74 | 74 | 74 | 74 | 74 | | | | | | | | | | | | | | | | | | | | | | | | | | | | | | | | |
| 0.841–0.860 (0.0331–0.0339) | 56 | 58 | 60 | 62 | 64 | 66 | 68 | 70 | 70 | 72 | 72 | 74 | 74 | 74 | 74 | 74 | 74 | | | | | | | | | | | | | | | | | | | | | | | | | | | | | | | | | | |
| 0.861–0.880 (0.0339–0.0346) | 58 | 60 | 62 | 64 | 66 | 68 | 70 | 72 | 72 | 74 | 74 | 74 | 74 | 74 | 74 | | | | | | | | | | | | | | | | | | | | | | | | | | | | | | | | | | | | |
| 0.881–0.900 (0.0347–0.0354) | 60 | 62 | 64 | 66 | 68 | 70 | 72 | 74 | 74 | 74 | 74 | 74 | 74 | | | | | | | | | | | | | | | | | | | | | | | | | | | | | | | | | | | | | | |
| 0.901–0.920 (0.0355–0.0362) | 62 | 64 | 66 | 68 | 70 | 72 | 74 | 74 | 74 | 74 | 74 | | | | | | | | | | | | | | | | | | | | | | | | | | | | | | | | | | | | | | | | |
| 0.921–0.940 (0.0363–0.0370) | 64 | 66 | 68 | 70 | 72 | 74 | 74 | 74 | 74 | | | | | | | | | | | | | | | | | | | | | | | | | | | | | | | | | | | | | | | | | | |
| 0.941–0.960 (0.0370–0.0378) | 66 | 68 | 70 | 72 | 74 | 74 | 74 | | | | | | | | | | | | | | | | | | | | | | | | | | | | | | | | | | | | | | | | | | | | |
| 0.961–0.980 (0.0378–0.0386) | 68 | 70 | 72 | 74 | 74 | 74 | | | | | | | | | | | | | | | | | | | | | | | | | | | | | | | | | | | | | | | | | | | | | |
| 0.981–1.000 (0.0386–0.0394) | 70 | 72 | 74 | 74 | 74 | | | | | | | | | | | | | | | | | | | | | | | | | | | | | | | | | | | | | | | | | | | | | | |
| 1.001–1.020 (0.0394–0.0402) | 72 | 74 | 74 | 74 | | | | | | | | | | | | | | | | | | | | | | | | | | | | | | | | | | | | | | | | | | | | | | | |
| 1.021–1.040 (0.0402–0.0409) | 74 | 74 | 74 | | | | | | | | | | | | | | | | | | | | | | | | | | | | | | | | | | | | | | | | | | | | | | | | |
| 1.041–1.060 (0.0410–0.0417) | 74 | 74 | | | | | | | | | | | | | | | | | | | | | | | | | | | | | | | | | | | | | | | | | | | | | | | | | |
| 1.061–1.080 (0.0418–0.0425) | 74 | | | | | | | | | | | | | | | | | | | | | | | | | | | | | | | | | | | | | | | | | | | | | | | | | | |

**Exhaust valve clearance (Cold):**
**0.30 to 0.40 mm (0.0118 to 0.0157 in.)**

EXAMPLE:

The 5.340 mm (0.2102 in.) lifter is installed, and the measured clearance is 0.440 mm (0.0173 in.).

Replace the 5.340 mm (0.2102 in.) lifter with a new No. 44 lifter.

New lifter thickness mm (in.)

| Lifter No. | Thickness | Lifter No. | Thickness | Lifter No. | Thickness |
|---|---|---|---|---|---|
| 06 | 5.060 (0.1992) | 30 | 5.300 (0.2087) | 54 | 5.540 (0.2181) |
| 08 | 5.080 (0.2000) | 32 | 5.320 (0.2094) | 56 | 5.560 (0.2189) |
| 10 | 5.100 (0.2008) | 34 | 5.340 (0.2102) | 58 | 5.580 (0.2197) |
| 12 | 5.120 (0.2016) | 36 | 5.360 (0.2110) | 60 | 5.600 (0.2205) |
| 14 | 5.140 (0.2024) | 38 | 5.380 (0.2118) | 62 | 5.620 (0.2213) |
| 16 | 5.160 (0.2031) | 40 | 5.400 (0.2126) | 64 | 5.640 (0.2220) |
| 18 | 5.180 (0.2039) | 42 | 5.420 (0.2134) | 66 | 5.660 (0.2228) |
| 20 | 5.200 (0.2047) | 44 | 5.440 (0.2142) | 68 | 5.680 (0.2236) |
| 22 | 5.220 (0.2055) | 46 | 5.460 (0.2150) | 70 | 5.700 (0.2244) |
| 24 | 5.240 (0.2063) | 48 | 5.480 (0.2157) | 72 | 5.720 (0.2252) |
| 26 | 5.260 (0.2071) | 50 | 5.500 (0.2165) | 74 | 5.740 (0.2260) |
| 28 | 5.280 (0.2079) | 52 | 5.520 (0.2173) | | |

A77297



cardiagn.com

(h) Install the camshafts. (See page 14–171)
(i) Install the chain tensioner. (See page 14–171)

**10. INSTALL CYLINDER HEAD COVER SUB–ASSY (See page 14–171)**

**11. INSTALL IGNITION COIL ASSY**
**Torque: 9.0 N·m (92 kgf·cm, 80 in.·lbf)**

**12. CHECK FOR ENGINE OIL LEAKS**

**13. INSTALL ENGINE COVER SUB–ASSY NO.1**
**Torque: 7.0 N·m (71 kgf·cm, 62 in.·lbf)**

cardiagn.com

# VALVE CLEARANCE (1ZZ–FE/3ZZ–FE)

141CE–01

## ADJUSTMENT

1. **REMOVE RADIATOR SUPPORT OPENING COVER (See page 14–27)**
2. **REMOVE ENGINE ROOM COVER SIDE (See page 14–27)**

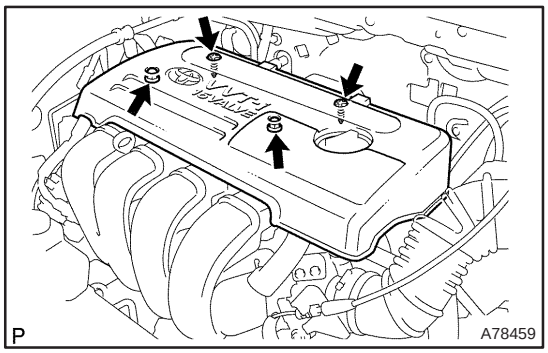


3. **REMOVE CYLINDER HEAD COVER NO.2**

(a) Remove the 2 nuts and 2 clips and detach cylinder head cover No.2.

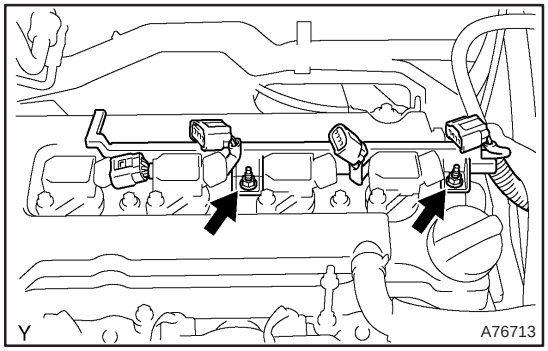


4. **DISCONNECT IGNITION COIL ASSY**

(a) Remove the 5 clamps from the 5 clamp brackets.
(b) Disconnect the 4 ignition coil connectors.
(c) Remove the 2 nuts which are used to secure the engine wire.

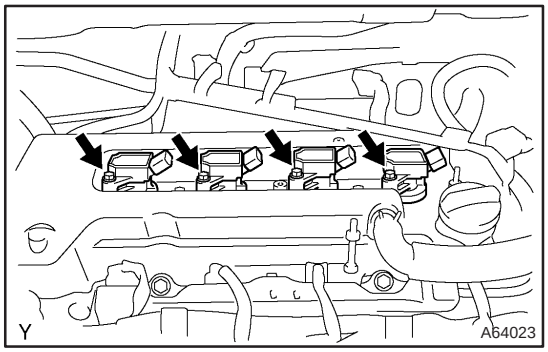


(d) Remove the 4 bolts and the 4 ignition coils.

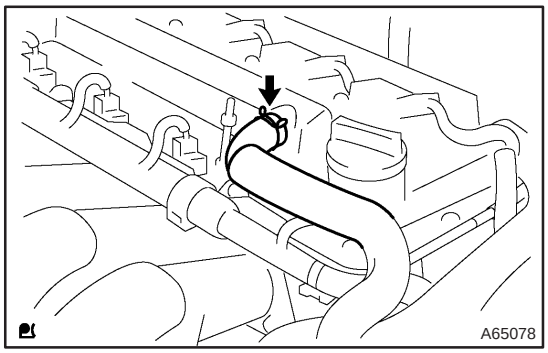


5. **DISCONNECT VENTILATION HOSE**

(a) Disconnect the ventilation hose from the cylinder head cover.

cardiagn.com

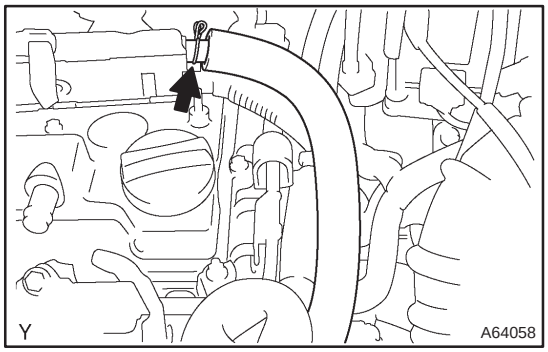


**6. DISCONNECT VENTILATION HOSE NO.2**

(a) Disconnect the ventilation hose from the cylinder head cover.

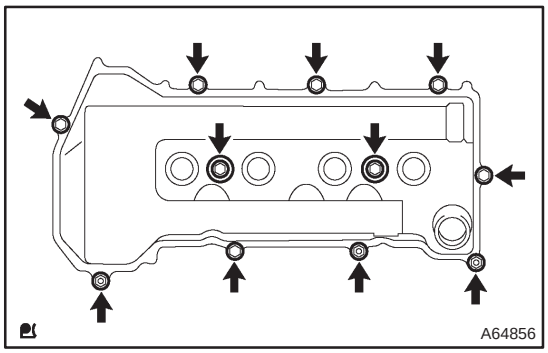


**7. REMOVE CYLINDER HEAD COVER SUB–ASSY**

(a) Remove the 9 bolts, 2 seal washers, 2 nuts, 3 clamp brackets and cylinder head cover.

**8. REMOVE ENGINE UNDER COVER SUB–ASSY NO.1**

**9. REMOVE ENGINE UNDER COVER RH**

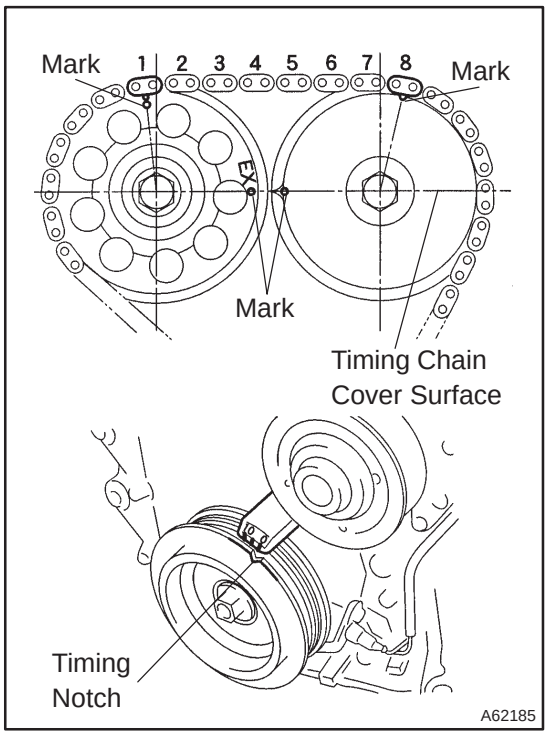


**10. SET NO. 1 CYLINDER TO TDC/COMPRESSION**

(a) Turn the crankshaft pulley, and align the timing notch with timing mark ”0” of the timing chain cover.

(b) Check that the point marks of the camshaft timing sprocket and VVT timing sprocket are in straight line on the timing chain cover surface as shown in the illustration.

HINT:

If not, turn the crankshaft 1 revolution (360°) and align the marks as above.

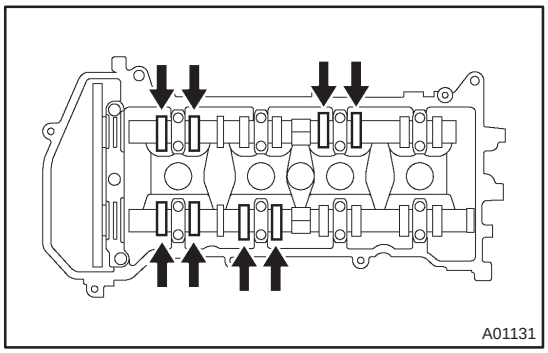


**11. INSPECT VALVE CLEARANCE**

(a) Check the valves indicated in the illustration.

(1) Using a feeler gauge, measure the clearance between the valve lifter and the camshaft.

(2) Record the out–of specification valve clearance measurements. They will be used later to determine the required replacement valve lifter.

**Valve clearance (Cold):**

**Intake 0.15 to 0.25 mm (0.0059 to 0.0098 in.)**

**Exhaust 0.25 to 0.35 mm (0.0098 to 0.0138 in.)**

cardiagn.com

(b) Turn the crankshaft 1 revolution (360 °) and set No. 4 cylinder to TDC/compression.

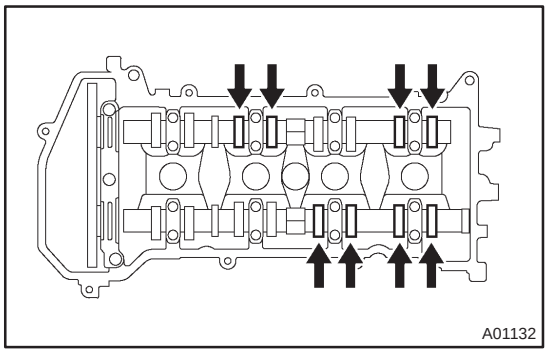


(c) Check the valves indicated in the illustration.
(1) Using a feeler gauge, measure the clearance between the valve lifter and camshaft.
(2) Record the out–of specification valve clearance measurements. They will be used later to determine the required replacement valve lifter.

**Valve clearance (Cold):**
**Intake 0.15 to 0.25 mm (0.0059 to 0.0098 in.)**
**Exhaust 0.25 to 0.35 mm (0.0098 to 0.0138 in.)**

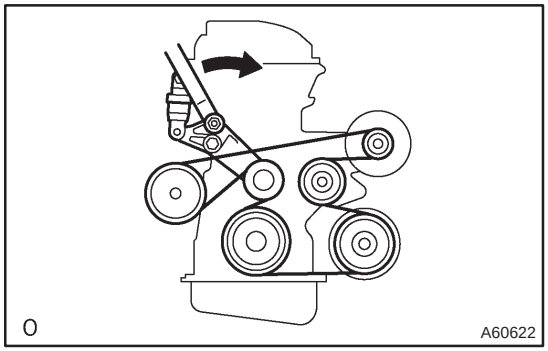


**12. REMOVE FAN AND GENERATOR V BELT**

(a) Turn the V–ribbed belt tensioner clockwise slowly and loosen it. Then, remove the fan and generator V belt and put back the V–ribbed belt tensioner carefully.

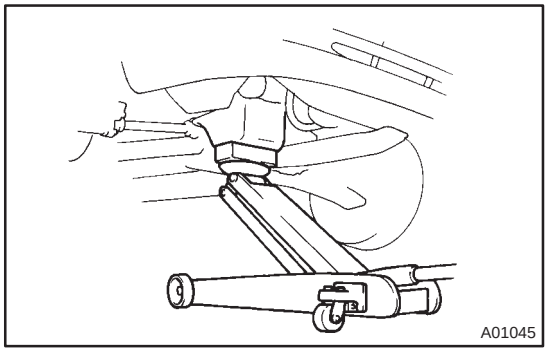


**13. REMOVE ENGINE MOUNTING INSULATOR SUB–ASSY RH**

(a) Place a wooden block on a jack underneath the engine. Remove the 4 bolts and 2 nuts and detach the engine mounting insulator RH.

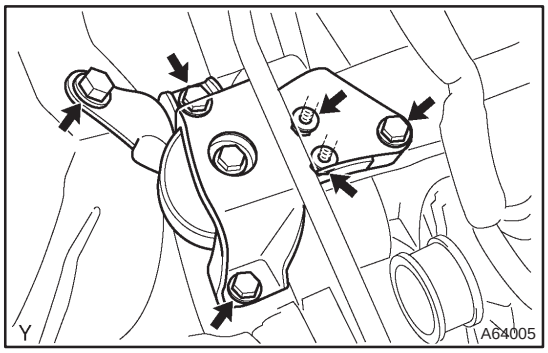


cardiagn.com

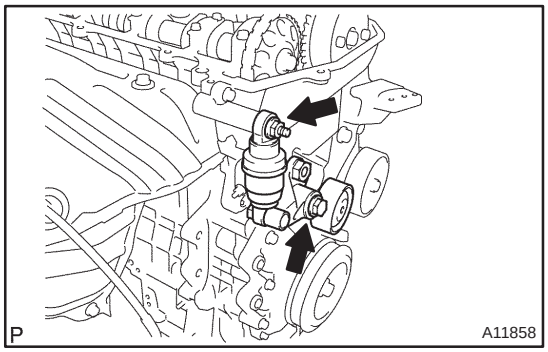


**14. REMOVE V–RIBBED BELT TENSIONER ASSY**

(a) Remove the bolt and nut, then remove the V–ribbed belt tensioner.

HINT:

Jack up and down to remove the bolt.

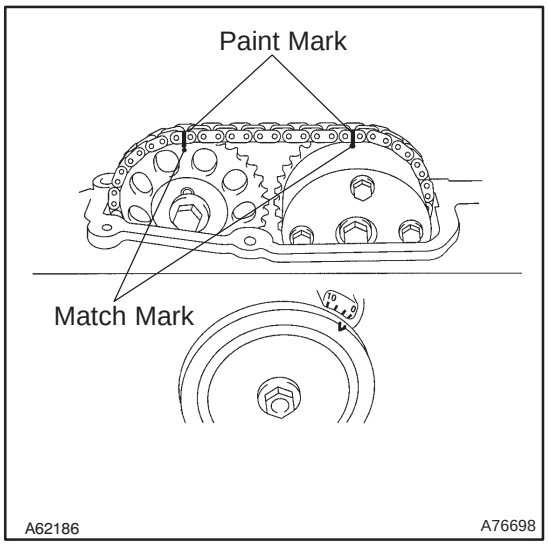


**15. ADJUST VALVE CLEARANCE**

**NOTICE:**

**Be sure not to revolve the crankshaft without the chain tensioner.**

(a) Set the No. 1 cylinder to the TDC/compression.

(b) Place match marks on the 2 camshaft sprockets and paint marks on the timing chain.

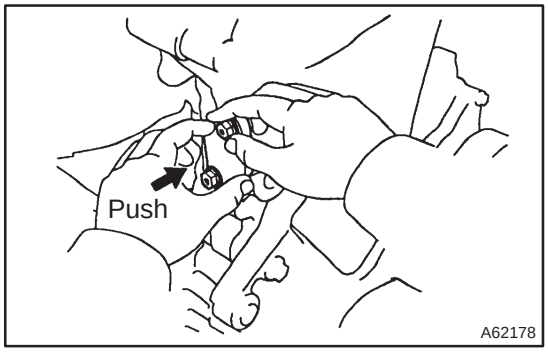


(c) Remove the 2 nuts and the chain tensioner.

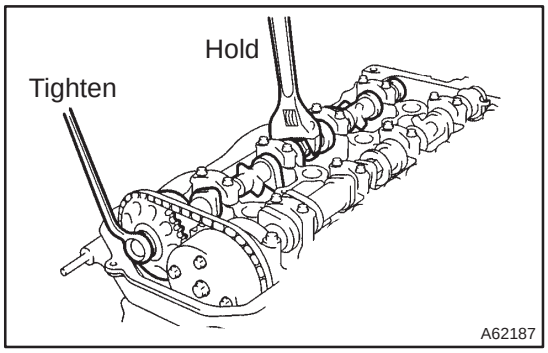


(d) Hold the camshaft with a wrench, loosen the camshaft timing gear set bolt.

**NOTICE:**

**Be careful not to damage the valve lifter.**

cardiagn.com

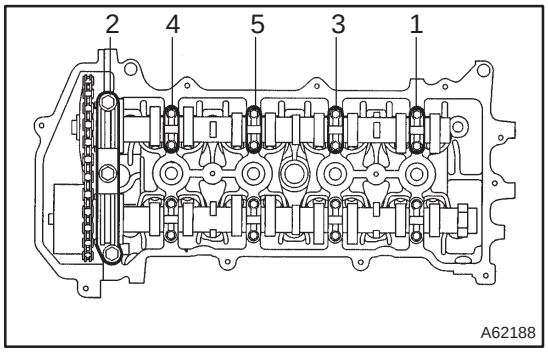


(e) Using several steps, loosen the camshaft bearing cap bolts on the No. 2 camshaft in the sequence shown in the illustration and remove the bearing caps.

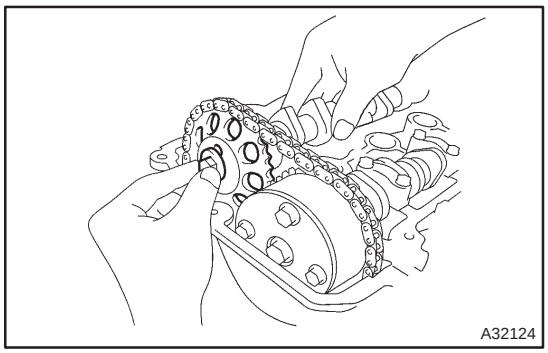


(f) Remove the camshaft timing gear as shown in the illustration.

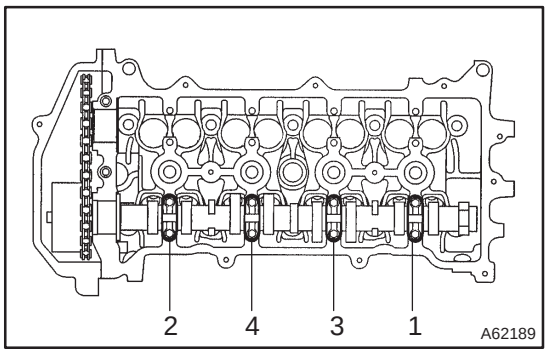


(g) Using several steps, loosen the camshaft bearing cap bolts on the camshaft in the sequence shown in the illustration and remove the bearing caps.

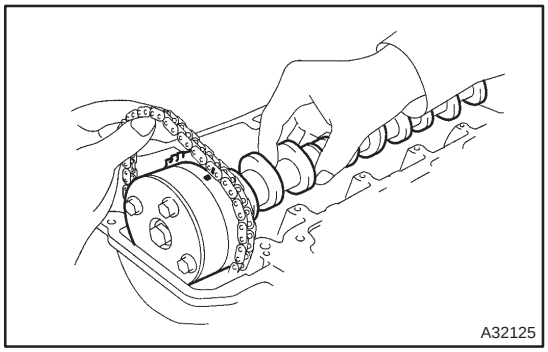


(h) Remove the camshaft while holding the timing chain.

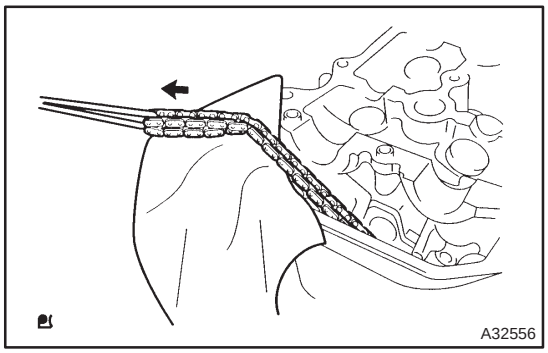


(i) Tie the timing chain with a string as shown in the illustration.

**NOTICE:**

**Be careful not to drop anything inside the timing chain cover.**

cardiagn.com

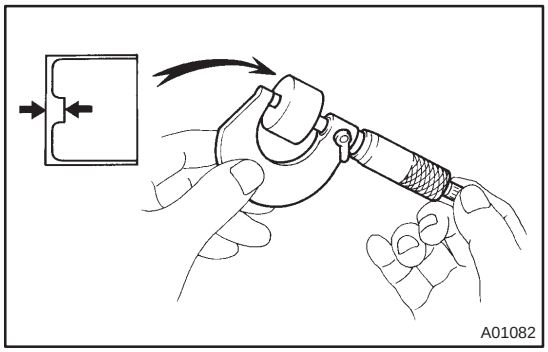


(j) Remove the valve lifters.

(k) Using a micrometer, measure the thickness of the removed lifter.

(l) Calculate the thickness of a new lifter so that the valve clearance comes within the specified value.

| | |
|---|---|
| A | Thickness of new lifter |
| B | Thickness of used lifter |
| C | Measured valve clearance |

**Valve clearance:**
**Intake A = B + (C – 0.20 mm (0.0079 in.))**
**Exhaust A = B + (C – 0.30 mm (0.0118 in.))**

**Example (Intake):**
**Measure intake valve clearance = 0.40 mm (0.0158 in.)**
**0.40 mm (0.0158 in.) – 0.20 mm (0.0079 in.) = 0.20 mm (0.0079 in.)**
**(Measured – Specification = Excess clearance)**
**Used lifter measurement = 5.250 mm (0.2067 in.)**
**0.20 mm (0.0079 in.) + 5.250 mm (0.2067 in.) = 5.450 mm (0.2146 in.)**
**(Excess clearance + Used lifter = Ideal new lifter)**
**Closest new lifter = 5.460 mm (0.2150 in.)**
**Select No. 46 lifter**

HINT:
- Select a new lifter with a thickness as close as possible to the calculated values.
- Lifter are available in 35 sizes in increments of 0.020 mm (0.0008 in.), from 5.060 mm (0.1992 in.) to 5.740 mm (0.2260 in.).
- Refer to new lifter thickness table on the next 2 pages.

cardiagn.com

## 1ZZ–FE, 3ZZ–FE: Valve Lifter Selection Chart (Intake)

| Measured clearance mm (in.) \ Installed lifter thickness mm (in.) | 5.060 (0.1992) | 5.080 (0.2000) | 5.100 (0.2008) | 5.120 (0.2016) | 5.140 (0.2024) | 5.160 (0.2031) | 5.180 (0.2039) | 5.200 (0.2047) | 5.210 (0.2051) | 5.220 (0.2055) | 5.230 (0.2059) | 5.240 (0.2063) | 5.250 (0.2067) | 5.260 (0.2071) | 5.270 (0.2075) | 5.280 (0.2079) | 5.290 (0.2083) | 5.300 (0.2087) | 5.310 (0.2091) | 5.320 (0.2094) | 5.330 (0.2098) | 5.340 (0.2102) | 5.350 (0.2106) | 5.360 (0.2110) | 5.370 (0.2114) | 5.380 (0.2118) | 5.390 (0.2122) | 5.400 (0.2126) | 5.410 (0.2130) | 5.420 (0.2134) | 5.430 (0.2138) | 5.440 (0.2142) | 5.450 (0.2146) | 5.460 (0.2150) | 5.470 (0.2154) | 5.480 (0.2157) | 5.490 (0.2161) | 5.500 (0.2165) | 5.510 (0.2169) | 5.520 (0.2173) | 5.530 (0.2177) | 5.540 (0.2181) | 5.550 (0.2185) | 5.560 (0.2189) | 5.570 (0.2193) | 5.580 (0.2197) | 5.590 (0.2201) | 5.600 (0.2205) | 5.620 (0.2213) | 5.640 (0.2220) | 5.660 (0.2228) | 5.680 (0.2236) | 5.700 (0.2244) | 5.720 (0.2252) | 5.740 (0.2260) |
|---|---|---|---|---|---|---|---|---|---|---|---|---|---|---|---|---|---|---|---|---|---|---|---|---|---|---|---|---|---|---|---|---|---|---|---|---|---|---|---|---|---|---|---|---|---|---|---|---|---|---|---|---|---|---|---|---|---|
| 0.000 – 0.030 (0.0000 – 0.0012) | | | | | | | | | 06 | 06 | 06 | 06 | 06 | 08 | 10 | 10 | 12 | 12 | 14 | 14 | 16 | 16 | 18 | 18 | 20 | 20 | 22 | 22 | 24 | 24 | 26 | 26 | 28 | 28 | 30 | 30 | 32 | 32 | 34 | 34 | 36 | 36 | 38 | 38 | 40 | 40 | 42 | 42 | 44 | 46 | 48 | 50 | 52 | 54 | 56 |
| 0.031 – 0.050 (0.0012 – 0.0020) | | | | | | | 06 | 06 | 06 | 06 | 08 | 08 | 10 | 10 | 12 | 12 | 14 | 14 | 16 | 16 | 18 | 18 | 20 | 20 | 22 | 22 | 24 | 24 | 26 | 26 | 28 | 28 | 30 | 30 | 32 | 32 | 34 | 34 | 36 | 36 | 38 | 38 | 40 | 40 | 42 | 42 | 44 | 44 | 46 | 48 | 50 | 52 | 54 | 56 | 58 |
| 0.051 – 0.070 (0.0020 – 0.0028) | | | | | | 06 | 06 | 06 | 08 | 08 | 10 | 10 | 12 | 12 | 14 | 14 | 16 | 16 | 18 | 18 | 20 | 20 | 22 | 22 | 24 | 24 | 26 | 26 | 28 | 28 | 30 | 30 | 32 | 32 | 34 | 34 | 36 | 36 | 38 | 38 | 40 | 40 | 42 | 42 | 44 | 44 | 46 | 46 | 48 | 50 | 52 | 54 | 56 | 58 | 60 |
| 0.071 – 0.090 (0.0028 – 0.0035) | | | | | 06 | 06 | 06 | 08 | 10 | 10 | 12 | 12 | 14 | 14 | 16 | 16 | 18 | 18 | 20 | 20 | 22 | 22 | 24 | 24 | 26 | 26 | 28 | 28 | 30 | 30 | 32 | 32 | 34 | 34 | 36 | 36 | 38 | 38 | 40 | 40 | 42 | 42 | 44 | 44 | 46 | 46 | 48 | 48 | 50 | 52 | 54 | 56 | 58 | 60 | 62 |
| 0.091 – 0.110 (0.0036 – 0.0043) | | | | 06 | 06 | 06 | 08 | 10 | 12 | 12 | 14 | 14 | 16 | 16 | 18 | 18 | 20 | 20 | 22 | 22 | 24 | 24 | 26 | 26 | 28 | 28 | 30 | 30 | 32 | 32 | 34 | 34 | 36 | 36 | 38 | 38 | 40 | 40 | 42 | 42 | 44 | 44 | 46 | 46 | 48 | 48 | 50 | 50 | 52 | 54 | 56 | 58 | 60 | 62 | 64 |
| 0.111 – 0.130 (0.0044 – 0.0051) | | | 06 | 06 | 06 | 08 | 10 | 12 | 14 | 14 | 16 | 16 | 18 | 18 | 20 | 20 | 22 | 22 | 24 | 24 | 26 | 26 | 28 | 28 | 30 | 30 | 32 | 32 | 34 | 34 | 36 | 36 | 38 | 38 | 40 | 40 | 42 | 42 | 44 | 44 | 46 | 46 | 48 | 48 | 50 | 50 | 52 | 52 | 54 | 56 | 58 | 60 | 62 | 64 | 66 |
| 0.131 – 0.149 (0.0052 – 0.0059) | | 06 | 06 | 06 | 08 | 10 | 12 | 14 | 16 | 16 | 18 | 18 | 20 | 20 | 22 | 22 | 24 | 24 | 26 | 26 | 28 | 28 | 30 | 30 | 32 | 32 | 34 | 34 | 36 | 36 | 38 | 38 | 40 | 40 | 42 | 42 | 44 | 44 | 46 | 46 | 48 | 48 | 50 | 50 | 52 | 52 | 54 | 54 | 56 | 58 | 60 | 62 | 64 | 66 | 68 |
| 0.150 – 0.250 (0.0059 – 0.0098) | | | | | | | | | | | | | | | | | | | | | | | | | | | | | | | | | | | | | | | | | | | | | | | | | | | | | | | | | |
| 0.251 – 0.270 (0.0099 – 0.0106) | 12 | 14 | 16 | 18 | 20 | 22 | 24 | 26 | 28 | 28 | 30 | 30 | 32 | 32 | 34 | 34 | 36 | 36 | 38 | 38 | 40 | 40 | 42 | 42 | 44 | 44 | 46 | 46 | 48 | 48 | 50 | 50 | 52 | 52 | 54 | 54 | 56 | 56 | 58 | 58 | 60 | 60 | 62 | 62 | 64 | 64 | 66 | 66 | 68 | 70 | 72 | 74 | 74 | 74 | |
| 0.271 – 0.290 (0.0107 – 0.0114) | 14 | 16 | 18 | 20 | 22 | 24 | 26 | 28 | 30 | 30 | 32 | 32 | 34 | 34 | 36 | 36 | 38 | 38 | 40 | 40 | 42 | 42 | 44 | 44 | 46 | 46 | 48 | 48 | 50 | 50 | 52 | 52 | 54 | 54 | 56 | 56 | 58 | 58 | 60 | 60 | 62 | 62 | 64 | 64 | 66 | 66 | 68 | 68 | 70 | 72 | 74 | 74 | 74 | | |
| 0.291 – 0.310 (0.0115 – 0.0122) | 16 | 18 | 20 | 22 | 24 | 26 | 28 | 30 | 32 | 32 | 34 | 34 | 36 | 36 | 38 | 38 | 40 | 40 | 42 | 42 | 44 | 44 | 46 | 46 | 48 | 48 | 50 | 50 | 52 | 52 | 54 | 54 | 56 | 56 | 58 | 58 | 60 | 60 | 62 | 62 | 64 | 64 | 66 | 66 | 68 | 68 | 70 | 70 | 72 | 74 | 74 | 74 | | | |
| 0.311 – 0.330 (0.0122 – 0.0130) | 18 | 20 | 22 | 24 | 26 | 28 | 30 | 32 | 34 | 34 | 36 | 36 | 38 | 38 | 40 | 40 | 42 | 42 | 44 | 44 | 46 | 46 | 48 | 48 | 50 | 50 | 52 | 52 | 54 | 54 | 56 | 56 | 58 | 58 | 60 | 60 | 62 | 62 | 64 | 64 | 66 | 66 | 68 | 68 | 70 | 70 | 72 | 72 | 74 | 74 | 74 | | | | |
| 0.331 – 0.350 (0.0130 – 0.0138) | 20 | 22 | 24 | 26 | 28 | 30 | 32 | 34 | 36 | 36 | 38 | 38 | 40 | 40 | 42 | 42 | 44 | 44 | 46 | 46 | 48 | 48 | 50 | 50 | 52 | 52 | 54 | 54 | 56 | 56 | 58 | 58 | 60 | 60 | 62 | 62 | 64 | 64 | 66 | 66 | 68 | 68 | 70 | 70 | 72 | 72 | 74 | 74 | 74 | 74 | | | | | |
| 0.351 – 0.370 (0.0138 – 0.0146) | 22 | 24 | 26 | 28 | 30 | 32 | 34 | 36 | 38 | 38 | 40 | 40 | 42 | 42 | 44 | 44 | 46 | 46 | 48 | 48 | 50 | 50 | 52 | 52 | 54 | 54 | 56 | 56 | 58 | 58 | 60 | 60 | 62 | 62 | 64 | 64 | 66 | 66 | 68 | 68 | 70 | 70 | 72 | 72 | 74 | 74 | 74 | 74 | 74 | | | | | | |
| 0.371 – 0.390 (0.0146 – 0.0154) | 24 | 26 | 28 | 30 | 32 | 34 | 36 | 38 | 40 | 40 | 42 | 42 | 44 | 44 | 46 | 46 | 48 | 48 | 50 | 50 | 52 | 52 | 54 | 54 | 56 | 56 | 58 | 58 | 60 | 60 | 62 | 62 | 64 | 64 | 66 | 66 | 68 | 68 | 70 | 70 | 72 | 72 | 74 | 74 | 74 | 74 | 74 | 74 | | | | | | | |
| 0.391 – 0.410 (0.0154 – 0.0161) | 26 | 28 | 30 | 32 | 34 | 36 | 38 | 40 | 42 | 42 | 44 | 44 | 46 | 46 | 48 | 48 | 50 | 50 | 52 | 52 | 54 | 54 | 56 | 56 | 58 | 58 | 60 | 60 | 62 | 62 | 64 | 64 | 66 | 66 | 68 | 68 | 70 | 70 | 72 | 72 | 74 | 74 | 74 | 74 | 74 | 74 | 74 | | | | | | | | |
| 0.411 – 0.430 (0.0162 – 0.0169) | 28 | 30 | 32 | 34 | 36 | 38 | 40 | 42 | 44 | 44 | 46 | 46 | 48 | 48 | 50 | 50 | 52 | 52 | 54 | 54 | 56 | 56 | 58 | 58 | 60 | 60 | 62 | 62 | 64 | 64 | 66 | 66 | 68 | 68 | 70 | 70 | 72 | 72 | 74 | 74 | 74 | 74 | 74 | 74 | | | | | | | | | | | |
| 0.431 – 0.450 (0.0170 – 0.0177) | 30 | 32 | 34 | 36 | 38 | 40 | 42 | 44 | 46 | 46 | 48 | 48 | 50 | 50 | 52 | 52 | 54 | 54 | 56 | 56 | 58 | 58 | 60 | 60 | 62 | 62 | 64 | 64 | 66 | 66 | 68 | 68 | 70 | 70 | 72 | 72 | 74 | 74 | 74 | 74 | 74 | 74 | | | | | | | | | | | | | |
| 0.451 – 0.470 (0.0178 – 0.0185) | 32 | 34 | 36 | 38 | 40 | 42 | 44 | 46 | 48 | 48 | 50 | 50 | 52 | 52 | 54 | 54 | 56 | 56 | 58 | 58 | 60 | 60 | 62 | 62 | 64 | 64 | 66 | 66 | 68 | 68 | 70 | 70 | 72 | 72 | 74 | 74 | 74 | 74 | 74 | 74 | | | | | | | | | | | | | | | |
| 0.471 – 0.490 (0.0185 – 0.0193) | 34 | 36 | 38 | 40 | 42 | 44 | 46 | 48 | 50 | 50 | 52 | 52 | 54 | 54 | 56 | 56 | 58 | 58 | 60 | 60 | 62 | 62 | 64 | 64 | 66 | 66 | 68 | 68 | 70 | 70 | 72 | 72 | 74 | 74 | 74 | 74 | 74 | 74 | | | | | | | | | | | | | | | | | |
| 0.491 – 0.510 (0.0193 – 0.0201) | 36 | 38 | 40 | 42 | 44 | 46 | 48 | 50 | 52 | 52 | 54 | 54 | 56 | 56 | 58 | 58 | 60 | 60 | 62 | 62 | 64 | 64 | 66 | 66 | 68 | 68 | 70 | 70 | 72 | 72 | 74 | 74 | 74 | 74 | 74 | 74 | | | | | | | | | | | | | | | | | | | |
| 0.511 – 0.530 (0.0201 – 0.0209) | 38 | 40 | 42 | 44 | 46 | 48 | 50 | 52 | 54 | 54 | 56 | 56 | 58 | 58 | 60 | 60 | 62 | 62 | 64 | 64 | 66 | 66 | 68 | 68 | 70 | 70 | 72 | 72 | 74 | 74 | 74 | 74 | 74 | 74 | | | | | | | | | | | | | | | | | | | | | |
| 0.531 – 0.550 (0.0209 – 0.0217) | 40 | 42 | 44 | 46 | 48 | 50 | 52 | 54 | 56 | 56 | 58 | 58 | 60 | 60 | 62 | 62 | 64 | 64 | 66 | 66 | 68 | 68 | 70 | 70 | 72 | 72 | 74 | 74 | 74 | 74 | 74 | 74 | | | | | | | | | | | | | | | | | | | | | |
| 0.551 – 0.570 (0.0217 – 0.0224) | 42 | 44 | 46 | 48 | 50 | 52 | 54 | 56 | 58 | 58 | 60 | 60 | 62 | 62 | 64 | 64 | 66 | 66 | 68 | 68 | 70 | 70 | 72 | 72 | 74 | 74 | 74 | 74 | 74 | 74 | | | | | | | | | | | | | | | | | | | | | | | | | |
| 0.571 – 0.590 (0.0225 – 0.0232) | 44 | 46 | 48 | 50 | 52 | 54 | 56 | 58 | 60 | 60 | 62 | 62 | 64 | 64 | 66 | 66 | 68 | 68 | 70 | 70 | 72 | 72 | 74 | 74 | 74 | 74 | 74 | 74 | | | | | | | | | | | | | | | | | | | | | | | | | | | |
| 0.591 – 0.610 (0.0233 – 0.0240) | 46 | 48 | 50 | 52 | 54 | 56 | 58 | 60 | 62 | 62 | 64 | 64 | 66 | 66 | 68 | 68 | 70 | 70 | 72 | 72 | 74 | 74 | 74 | 74 | 74 | 74 | | | | | | | | | | | | | | | | | | | | | | | | | | | |
| 0.611 – 0.630 (0.0241 – 0.0248) | 48 | 50 | 52 | 54 | 56 | 58 | 60 | 62 | 64 | 64 | 66 | 66 | 68 | 68 | 70 | 70 | 72 | 72 | 74 | 74 | 74 | 74 | 74 | 74 | | | | | | | | | | | | | | | | | | | | | | | | | | | |
| 0.631 – 0.650 (0.0248 – 0.0256) | 50 | 52 | 54 | 56 | 58 | 60 | 62 | 64 | 66 | 66 | 68 | 68 | 70 | 70 | 72 | 72 | 74 | 74 | 74 | 74 | 74 | 74 | | | | | | | | | | | | | | | | | | | | | | | | | | | |
| 0.651 – 0.670 (0.0256 – 0.0264) | 52 | 54 | 56 | 58 | 60 | 62 | 64 | 66 | 68 | 68 | 70 | 70 | 72 | 72 | 74 | 74 | 74 | 74 | 74 | 74 | | | | | | | | | | | | | | | | | | | | | | | | | | | | | |
| 0.671 – 0.690 (0.0264 – 0.0272) | 54 | 56 | 58 | 60 | 62 | 64 | 66 | 68 | 70 | 70 | 72 | 72 | 74 | 74 | 74 | 74 | 74 | 74 | | | | | | | | | | | | | | | | | | | | | | | | | | | | | | | |
| 0.691 – 0.710 (0.0272 – 0.0280) | 56 | 58 | 60 | 62 | 64 | 66 | 68 | 70 | 72 | 72 | 74 | 74 | 74 | 74 | 74 | 74 | | | | | | | | | | | | | | | | | | | | | | | | | | | | | | | | | |
| 0.711 – 0.730 (0.0280 – 0.0287) | 58 | 60 | 62 | 64 | 66 | 68 | 70 | 72 | 74 | 74 | 74 | 74 | 74 | 74 | | | | | | | | | | | | | | | | | | | | | | | | | | | | | | | | | | | |
| 0.731 – 0.750 (0.0288 – 0.0295) | 60 | 62 | 64 | 66 | 68 | 70 | 72 | 74 | 74 | 74 | 74 | 74 | | | | | | | | | | | | | | | | | | | | | | | | | | | | | | | | | | | | | |
| 0.751 – 0.770 (0.0296 – 0.0303) | 62 | 64 | 66 | 68 | 70 | 72 | 74 | 74 | 74 | 74 | | | | | | | | | | | | | | | | | | | | | | | | | | | | | | | | | | | | | | | |
| 0.771 – 0.790 (0.0304 – 0.0311) | 64 | 66 | 68 | 70 | 72 | 74 | 74 | 74 | | | | | | | | | | | | | | | | | | | | | | | | | | | | | | | | | | | | | | | | | |
| 0.791 – 0.810 (0.0311 – 0.0319) | 66 | 68 | 70 | 72 | 74 | 74 | 74 | | | | | | | | | | | | | | | | | | | | | | | | | | | | | | | | | | | | | | | | | | |
| 0.811 – 0.830 (0.0319 – 0.0327) | 68 | 70 | 72 | 74 | 74 | 74 | | | | | | | | | | | | | | | | | | | | | | | | | | | | | | | | | | | | | | | | | | | |
| 0.831 – 0.850 (0.0327 – 0.0335) | 70 | 72 | 74 | 74 | 74 | | | | | | | | | | | | | | | | | | | | | | | | | | | | | | | | | | | | | | | | | | | | |
| 0.851 – 0.870 (0.0335 – 0.0343) | 72 | 74 | 74 | 74 | | | | | | | | | | | | | | | | | | | | | | | | | | | | | | | | | | | | | | | | | | | | | |
| 0.871 – 0.890 (0.0343 – 0.0350) | 74 | 74 | 74 | | | | | | | | | | | | | | | | | | | | | | | | | | | | | | | | | | | | | | | | | | | | | | |
| 0.891 – 0.910 (0.0351 – 0.0358) | 74 | 74 | | | | | | | | | | | | | | | | | | | | | | | | | | | | | | | | | | | | | | | | | | | | | | | |
| 0.911 – 0.930 (0.0359 – 0.0366) | 74 | | | | | | | | | | | | | | | | | | | | | | | | | | | | | | | | | | | | | | | | | | | | | | | | |

New lifter thickness mm (in.)

| Lifter No. | Thickness | Lifter No. | Thickness | Lifter No. | Thickness |
|---|---|---|---|---|---|
| 06 | 5.060 (0.1992) | 30 | 5.300 (0.2087) | 54 | 5.540 (0.2181) |
| 08 | 5.080 (0.2000) | 32 | 5.320 (0.2094) | 56 | 5.560 (0.2189) |
| 10 | 5.100 (0.2008) | 34 | 5.340 (0.2102) | 58 | 5.580 (0.2197) |
| 12 | 5.120 (0.2016) | 36 | 5.360 (0.2110) | 60 | 5.600 (0.2205) |
| 14 | 5.140 (0.2024) | 38 | 5.380 (0.2118) | 62 | 5.620 (0.2213) |
| 16 | 5.160 (0.2031) | 40 | 5.400 (0.2126) | 64 | 5.640 (0.2220) |
| 18 | 5.180 (0.2039) | 42 | 5.420 (0.2134) | 66 | 5.660 (0.2228) |
| 20 | 5.200 (0.2047) | 44 | 5.440 (0.2142) | 68 | 5.680 (0.2236) |
| 22 | 5.220 (0.2055) | 46 | 5.460 (0.2150) | 70 | 5.700 (0.2244) |
| 24 | 5.240 (0.2063) | 48 | 5.480 (0.2157) | 72 | 5.720 (0.2252) |
| 26 | 5.260 (0.2071) | 50 | 5.500 (0.2165) | 74 | 5.740 (0.2260) |
| 28 | 5.280 (0.2079) | 52 | 5.520 (0.2173) | | |

**Intake valve clearance (Cold):**
**0.15 – 0.25 mm (0.006 – 0.010 in.)**

EXAMPLE: The 5.250 mm (0.2067 in.) lifter is installed, and the measured clearance is 0.400 mm (0.0157 in.).
Replace the 5.250 mm (0.2067 in.) lifter with a new No. 46 lifter.

A79322



cardiagn.com

## 1ZZ–FE, 3ZZ–FE: Valve Lifter Selection Chart (Exhaust)

| Measured clearance mm (in.) \ Installed lifter thickness mm (in.) | 5.060 (0.1992) | 5.080 (0.2000) | 5.100 (0.2008) | 5.120 (0.2016) | 5.140 (0.2024) | 5.160 (0.2031) | 5.180 (0.2039) | 5.200 (0.2047) | 5.210 (0.2051) | 5.220 (0.2055) | 5.230 (0.2059) | 5.240 (0.2063) | 5.250 (0.2067) | 5.260 (0.2071) | 5.270 (0.2075) | 5.280 (0.2079) | 5.290 (0.2083) | 5.300 (0.2087) | 5.310 (0.2091) | 5.320 (0.2094) | 5.330 (0.2098) | 5.340 (0.2102) | 5.350 (0.2106) | 5.360 (0.2110) | 5.370 (0.2114) | 5.380 (0.2118) | 5.390 (0.2122) | 5.400 (0.2126) | 5.410 (0.2130) | 5.420 (0.2134) | 5.430 (0.2138) | 5.440 (0.2142) | 5.450 (0.2146) | 5.460 (0.2150) | 5.470 (0.2154) | 5.480 (0.2157) | 5.490 (0.2161) | 5.500 (0.2165) | 5.510 (0.2169) | 5.520 (0.2173) | 5.530 (0.2177) | 5.540 (0.2181) | 5.550 (0.2185) | 5.560 (0.2189) | 5.570 (0.2193) | 5.580 (0.2197) | 5.590 (0.2201) | 5.600 (0.2205) | 5.620 (0.2213) | 5.640 (0.2220) | 5.660 (0.2228) | 5.680 (0.2236) | 5.700 (0.2244) | 5.720 (0.2252) | 5.740 (0.2260) |
|---|---|---|---|---|---|---|---|---|---|---|---|---|---|---|---|---|---|---|---|---|---|---|---|---|---|---|---|---|---|---|---|---|---|---|---|---|---|---|---|---|---|---|---|---|---|---|---|---|---|---|---|---|---|---|---|---|
| 0.000 – 0.030 (0.0000 – 0.0012) | | | | | | | | | | | | | | | | | | | 06 | 06 | 06 | 06 | 08 | 08 | 10 | 10 | 12 | 12 | 14 | 14 | 16 | 16 | 18 | 18 | 20 | 20 | 22 | 22 | 24 | 24 | 26 | 26 | 28 | 28 | 30 | 30 | 32 | 32 | 34 | 36 | 38 | 40 | 42 | 44 | 46 |
| 0.031 – 0.050 (0.0012 – 0.0020) | | | | | | | | | | | | | | | | 06 | 06 | 06 | 06 | 06 | 08 | 08 | 10 | 10 | 12 | 12 | 14 | 14 | 16 | 16 | 18 | 18 | 20 | 20 | 22 | 22 | 24 | 24 | 26 | 26 | 28 | 28 | 30 | 30 | 32 | 32 | 34 | 34 | 36 | 38 | 40 | 42 | 44 | 46 | 48 |
| 0.051 – 0.070 (0.0020 – 0.0028) | | | | | | | | | | | | | | 06 | 06 | 06 | 06 | 06 | 08 | 08 | 08 | 10 | 10 | 12 | 12 | 14 | 14 | 16 | 16 | 18 | 18 | 20 | 20 | 22 | 22 | 24 | 24 | 26 | 26 | 28 | 28 | 30 | 30 | 32 | 32 | 34 | 34 | 36 | 36 | 38 | 40 | 42 | 44 | 46 | 48 | 50 |
| 0.071 – 0.090 (0.0028 – 0.0035) | | | | | | | | | | | | 06 | 06 | 06 | 06 | 06 | 08 | 08 | 10 | 10 | 12 | 12 | 14 | 14 | 16 | 16 | 18 | 18 | 20 | 20 | 22 | 22 | 24 | 24 | 26 | 26 | 28 | 28 | 30 | 30 | 32 | 32 | 34 | 34 | 36 | 36 | 38 | 38 | 40 | 42 | 44 | 46 | 48 | 50 | 52 |
| 0.091 – 0.110 (0.0036 – 0.0043) | | | | | | | | | | | 06 | 06 | 06 | 06 | 08 | 08 | 10 | 10 | 12 | 12 | 14 | 14 | 16 | 16 | 18 | 18 | 20 | 20 | 22 | 22 | 24 | 24 | 26 | 26 | 28 | 28 | 30 | 30 | 32 | 32 | 34 | 34 | 36 | 36 | 38 | 38 | 40 | 40 | 42 | 44 | 46 | 48 | 50 | 52 | 54 |
| 0.111 – 0.130 (0.0044 – 0.0051) | | | | | | | | | 06 | 06 | 06 | 06 | 08 | 08 | 10 | 10 | 12 | 12 | 14 | 14 | 16 | 16 | 18 | 18 | 20 | 20 | 22 | 22 | 24 | 24 | 26 | 26 | 28 | 28 | 30 | 30 | 32 | 32 | 34 | 34 | 36 | 36 | 38 | 38 | 40 | 40 | 42 | 42 | 44 | 46 | 48 | 50 | 52 | 54 | 56 |
| 0.131 – 0.150 (0.0052 – 0.0059) | | | | | | | | 06 | 06 | 06 | 08 | 08 | 10 | 10 | 12 | 12 | 14 | 14 | 16 | 16 | 18 | 18 | 20 | 20 | 22 | 22 | 24 | 24 | 26 | 26 | 28 | 28 | 30 | 30 | 32 | 32 | 34 | 34 | 36 | 36 | 38 | 38 | 40 | 40 | 42 | 42 | 44 | 44 | 46 | 48 | 50 | 52 | 54 | 56 | 58 |
| 0.151 – 0.170 (0.0059 – 0.0067) | | | | | | 06 | 06 | 06 | 08 | 08 | 10 | 10 | 12 | 12 | 14 | 14 | 16 | 16 | 18 | 18 | 20 | 20 | 22 | 22 | 24 | 24 | 26 | 26 | 28 | 28 | 30 | 30 | 32 | 32 | 34 | 34 | 36 | 36 | 38 | 38 | 40 | 40 | 42 | 42 | 44 | 44 | 46 | 46 | 48 | 50 | 52 | 54 | 56 | 58 | 60 |
| 0.171 – 0.190 (0.0067 – 0.0075) | | | | | 06 | 06 | 06 | 08 | 10 | 10 | 12 | 12 | 14 | 14 | 16 | 16 | 18 | 18 | 20 | 20 | 22 | 22 | 24 | 24 | 26 | 26 | 28 | 28 | 30 | 30 | 32 | 32 | 34 | 34 | 36 | 36 | 38 | 38 | 40 | 40 | 42 | 42 | 44 | 44 | 46 | 46 | 48 | 48 | 50 | 52 | 54 | 56 | 58 | 60 | 62 |
| 0.191 – 0.210 (0.0075 – 0.0083) | | | | 06 | 06 | 06 | 08 | 10 | 12 | 12 | 14 | 14 | 16 | 16 | 18 | 18 | 20 | 20 | 22 | 22 | 24 | 24 | 26 | 26 | 28 | 28 | 30 | 30 | 32 | 32 | 34 | 34 | 36 | 36 | 38 | 38 | 40 | 40 | 42 | 42 | 44 | 44 | 46 | 46 | 48 | 48 | 50 | 50 | 52 | 54 | 56 | 58 | 60 | 62 | 64 |
| 0.211 – 0.230 (0.0083 – 0.0091) | | | 06 | 06 | 06 | 08 | 10 | 12 | 14 | 14 | 16 | 16 | 18 | 18 | 20 | 20 | 22 | 22 | 24 | 24 | 26 | 26 | 28 | 28 | 30 | 30 | 32 | 32 | 34 | 34 | 36 | 36 | 38 | 38 | 40 | 40 | 42 | 42 | 44 | 44 | 46 | 46 | 48 | 48 | 50 | 50 | 52 | 52 | 54 | 56 | 58 | 60 | 62 | 64 | 66 |
| 0.231 – 0.249 (0.0091 – 0.0098) | | 06 | 06 | 06 | 08 | 10 | 12 | 14 | 16 | 16 | 18 | 18 | 20 | 20 | 22 | 22 | 24 | 24 | 26 | 26 | 28 | 28 | 30 | 30 | 32 | 32 | 34 | 34 | 36 | 36 | 38 | 38 | 40 | 40 | 42 | 42 | 44 | 44 | 46 | 46 | 48 | 48 | 50 | 50 | 52 | 52 | 54 | 54 | 56 | 58 | 60 | 62 | 64 | 66 | 68 |
| 0.250 – 0.350 (0.0098 – 0.0138) | | | | | | | | | | | | | | | | | | | | | | | | | | | | | | | | | | | | | | | | | | | | | | | | | | | | | | | | |
| 0.351 – 0.370 (0.0138 – 0.0146) | 12 | 14 | 16 | 18 | 20 | 22 | 24 | 26 | 28 | 28 | 30 | 30 | 32 | 32 | 34 | 34 | 36 | 36 | 38 | 38 | 40 | 40 | 42 | 42 | 44 | 44 | 46 | 46 | 48 | 48 | 50 | 50 | 52 | 52 | 54 | 54 | 56 | 56 | 58 | 58 | 60 | 60 | 62 | 62 | 64 | 64 | 66 | 66 | 68 | 70 | 72 | 74 | 74 | 74 |
| 0.371 – 0.390 (0.0146 – 0.0154) | 14 | 16 | 18 | 20 | 22 | 24 | 26 | 28 | 30 | 30 | 32 | 32 | 34 | 34 | 36 | 36 | 38 | 38 | 40 | 40 | 42 | 42 | 44 | 44 | 46 | 46 | 48 | 48 | 50 | 50 | 52 | 52 | 54 | 54 | 56 | 56 | 58 | 58 | 60 | 60 | 62 | 62 | 64 | 64 | 66 | 66 | 68 | 68 | 70 | 72 | 74 | 74 | 74 | |
| 0.391 – 0.410 (0.0154 – 0.0161) | 16 | 18 | 20 | 22 | 24 | 26 | 28 | 30 | 32 | 32 | 34 | 34 | 36 | 36 | 38 | 38 | 40 | 40 | 42 | 42 | 44 | 44 | 46 | 46 | 48 | 48 | 50 | 50 | 52 | 52 | 54 | 54 | 56 | 56 | 58 | 58 | 60 | 60 | 62 | 62 | 64 | 64 | 66 | 66 | 68 | 68 | 70 | 70 | 72 | 74 | 74 | 74 | | |
| 0.411 – 0.430 (0.0162 – 0.0169) | 18 | 20 | 22 | 24 | 26 | 28 | 30 | 32 | 34 | 34 | 36 | 36 | 38 | 38 | 40 | 40 | 42 | 42 | 44 | 44 | 46 | 46 | 48 | 48 | 50 | 50 | 52 | 52 | 54 | 54 | 56 | 56 | 58 | 58 | 60 | 60 | 62 | 62 | 64 | 64 | 66 | 66 | 68 | 68 | 70 | 70 | 72 | 72 | 74 | 74 | 74 | | | |
| 0.431 – 0.450 (0.0170 – 0.0177) | 20 | 22 | 24 | 26 | 28 | 30 | 32 | 34 | 36 | 36 | 38 | 38 | 40 | 40 | 42 | 42 | 44 | 44 | 46 | 46 | 48 | 48 | 50 | 50 | 52 | 52 | 54 | 54 | 56 | 56 | 58 | 58 | 60 | 60 | 62 | 62 | 64 | 64 | 66 | 68 | 68 | 70 | 70 | 72 | 72 | 74 | 74 | 74 | 74 | 74 | | | | |
| 0.451 – 0.470 (0.0178 – 0.0185) | 22 | 24 | 26 | 28 | 30 | 32 | 34 | 36 | 38 | 38 | 40 | 40 | 42 | 42 | 44 | 44 | 46 | 46 | 48 | 48 | 50 | 50 | 52 | 52 | 54 | 54 | 56 | 56 | 58 | 58 | 60 | 60 | 62 | 62 | 64 | 64 | 66 | 66 | 68 | 68 | 70 | 70 | 72 | 72 | 74 | 74 | 74 | 74 | 74 | | | | | |
| 0.471 – 0.490 (0.0185 – 0.0193) | 24 | 26 | 28 | 30 | 32 | 34 | 36 | 38 | 40 | 40 | 42 | 42 | 44 | 44 | 46 | 46 | 48 | 48 | 50 | 50 | 52 | 52 | 54 | 54 | 56 | 56 | 58 | 58 | 60 | 60 | 62 | 62 | 64 | 64 | 66 | 66 | 68 | 68 | 70 | 70 | 72 | 72 | 74 | 74 | 74 | 74 | 74 | 74 | | | | | | |
| 0.491 – 0.510 (0.0193 – 0.0201) | 26 | 28 | 30 | 32 | 34 | 36 | 38 | 40 | 42 | 42 | 44 | 44 | 46 | 46 | 48 | 48 | 50 | 50 | 52 | 52 | 54 | 54 | 56 | 56 | 58 | 58 | 60 | 60 | 62 | 62 | 64 | 64 | 66 | 66 | 68 | 68 | 70 | 70 | 72 | 72 | 74 | 74 | 74 | 74 | 74 | 74 | | | | | | | | |
| 0.511 – 0.530 (0.0201 – 0.0209) | 28 | 30 | 32 | 34 | 36 | 38 | 40 | 42 | 44 | 44 | 46 | 46 | 48 | 48 | 50 | 50 | 52 | 52 | 54 | 54 | 56 | 56 | 58 | 58 | 60 | 60 | 62 | 62 | 64 | 64 | 66 | 66 | 68 | 68 | 70 | 70 | 72 | 72 | 74 | 74 | 74 | 74 | 74 | 74 | | | | | | | | | | |
| 0.531 – 0.550 (0.0209 – 0.0217) | 30 | 32 | 34 | 36 | 38 | 40 | 42 | 44 | 46 | 46 | 48 | 48 | 50 | 50 | 52 | 52 | 54 | 54 | 56 | 56 | 58 | 58 | 60 | 60 | 62 | 62 | 64 | 64 | 66 | 66 | 68 | 68 | 70 | 70 | 72 | 72 | 74 | 74 | 74 | 74 | 74 | 74 | | | | | | | | | | | | |
| 0.551 – 0.570 (0.0217 – 0.0224) | 32 | 34 | 36 | 38 | 40 | 42 | 44 | 46 | 48 | 48 | 50 | 50 | 52 | 52 | 54 | 54 | 56 | 56 | 58 | 58 | 60 | 60 | 62 | 62 | 64 | 64 | 66 | 66 | 68 | 68 | 70 | 70 | 72 | 72 | 74 | 74 | 74 | 74 | 74 | 74 | | | | | | | | | | | | | | |
| 0.571 – 0.590 (0.0225 – 0.0232) | 34 | 36 | 38 | 40 | 42 | 44 | 46 | 48 | 50 | 50 | 52 | 52 | 54 | 54 | 56 | 56 | 58 | 58 | 60 | 60 | 62 | 62 | 64 | 64 | 66 | 66 | 68 | 68 | 70 | 70 | 72 | 72 | 74 | 74 | 74 | 74 | 74 | 74 | | | | | | | | | | | | | | | | |
| 0.591 – 0.610 (0.0233 – 0.0240) | 36 | 38 | 40 | 42 | 44 | 46 | 48 | 50 | 52 | 52 | 54 | 54 | 56 | 56 | 58 | 58 | 60 | 60 | 62 | 62 | 64 | 64 | 66 | 66 | 68 | 68 | 70 | 70 | 72 | 72 | 74 | 74 | 74 | 74 | 74 | 74 | | | | | | | | | | | | | | | | | | |
| 0.611 – 0.630 (0.0241 – 0.0248) | 38 | 40 | 42 | 44 | 46 | 48 | 50 | 52 | 54 | 54 | 56 | 56 | 58 | 58 | 60 | 60 | 62 | 62 | 64 | 64 | 66 | 66 | 68 | 68 | 70 | 70 | 72 | 72 | 74 | 74 | 74 | 74 | 74 | 74 | | | | | | | | | | | | | | | | | | | | |
| 0.631 – 0.650 (0.0248 – 0.0256) | 40 | 42 | 44 | 46 | 48 | 50 | 52 | 54 | 56 | 56 | 58 | 58 | 60 | 60 | 62 | 62 | 64 | 64 | 66 | 66 | 68 | 68 | 70 | 70 | 72 | 72 | 74 | 74 | 74 | 74 | 74 | 74 | | | | | | | | | | | | | | | | | | | | |
| 0.651 – 0.670 (0.0256 – 0.0264) | 42 | 44 | 46 | 48 | 50 | 52 | 54 | 56 | 58 | 58 | 60 | 60 | 62 | 62 | 64 | 64 | 66 | 66 | 68 | 68 | 70 | 70 | 72 | 72 | 74 | 74 | 74 | 74 | 74 | 74 | | | | | | | | | | | | | | | | | | | | | | | | |
| 0.671 – 0.690 (0.0264 – 0.0272) | 44 | 46 | 48 | 50 | 52 | 54 | 56 | 58 | 60 | 60 | 62 | 62 | 64 | 64 | 66 | 66 | 68 | 68 | 70 | 70 | 72 | 72 | 74 | 74 | 74 | 74 | 74 | 74 | | | | | | | | | | | | | | | | | | | | | | | | | | |
| 0.691 – 0.710 (0.0272 – 0.0280) | 46 | 48 | 50 | 52 | 54 | 56 | 58 | 60 | 62 | 62 | 64 | 64 | 66 | 66 | 68 | 68 | 70 | 70 | 72 | 72 | 74 | 74 | 74 | 74 | 74 | 74 | 74 | | | | | | | | | | | | | | | | | | | | | | | | | | |
| 0.711 – 0.730 (0.0280 – 0.0287) | 48 | 50 | 52 | 54 | 56 | 58 | 60 | 62 | 64 | 64 | 66 | 66 | 68 | 68 | 70 | 70 | 72 | 72 | 74 | 74 | 74 | 74 | 74 | 74 | 74 | | | | | | | | | | | | | | | | | | | | | | | | | | | |
| 0.731 – 0.750 (0.0288 – 0.0295) | 50 | 52 | 54 | 56 | 58 | 60 | 62 | 64 | 66 | 66 | 68 | 68 | 70 | 70 | 72 | 72 | 74 | 74 | 74 | 74 | 74 | 74 | | | | | | | | | | | | | | | | | | | | | | | | | | | | |
| 0.751 – 0.770 (0.0296 – 0.0303) | 52 | 54 | 56 | 58 | 60 | 62 | 64 | 66 | 68 | 68 | 70 | 70 | 72 | 72 | 74 | 74 | 74 | 74 | 74 | 74 | 74 | | | | | | | | | | | | | | | | | | | | | | | | | | | | | |
| 0.771 – 0.790 (0.0304 – 0.0311) | 54 | 56 | 58 | 60 | 62 | 64 | 66 | 68 | 70 | 70 | 72 | 72 | 74 | 74 | 74 | 74 | 74 | 74 | | | | | | | | | | | | | | | | | | | | | | | | | | | | | | | | | | |
| 0.791 – 0.810 (0.0311 – 0.0319) | 56 | 58 | 60 | 62 | 64 | 66 | 68 | 70 | 72 | 72 | 74 | 74 | 74 | 74 | 74 | 74 | | | | | | | | | | | | | | | | | | | | | | | | | | | | | | | | | | | | |
| 0.811 – 0.830 (0.0319 – 0.0327) | 58 | 60 | 62 | 64 | 66 | 68 | 70 | 72 | 74 | 74 | 74 | 74 | 74 | 74 | | | | | | | | | | | | | | | | | | | | | | | | | | | | | | | | | | | | |
| 0.831 – 0.850 (0.0327 – 0.0335) | 60 | 62 | 64 | 66 | 68 | 70 | 72 | 74 | 74 | 74 | 74 | 74 | | | | | | | | | | | | | | | | | | | | | | | | | | | | | | | | | | | | | | |
| 0.851 – 0.870 (0.0335 – 0.0343) | 62 | 64 | 66 | 68 | 70 | 72 | 74 | 74 | 74 | 74 | | | | | | | | | | | | | | | | | | | | | | | | | | | | | | | | | | | | | | | | |
| 0.871 – 0.890 (0.0343 – 0.0350) | 64 | 66 | 68 | 70 | 72 | 74 | 74 | 74 | | | | | | | | | | | | | | | | | | | | | | | | | | | | | | | | | | | | | | | | | | |
| 0.891 – 0.910 (0.0351 – 0.0358) | 66 | 68 | 70 | 72 | 74 | 74 | 74 | | | | | | | | | | | | | | | | | | | | | | | | | | | | | | | | | | | | | | | | | | | |
| 0.911 – 0.930 (0.0359 – 0.0366) | 68 | 70 | 72 | 74 | 74 | 74 | | | | | | | | | | | | | | | | | | | | | | | | | | | | | | | | | | | | | | | | | | | | |
| 0.931 – 0.950 (0.0367 – 0.0374) | 70 | 72 | 74 | 74 | 74 | | | | | | | | | | | | | | | | | | | | | | | | | | | | | | | | | | | | | | | | | | | | | |
| 0.951 – 0.970 (0.0374 – 0.0382) | 72 | 74 | 74 | 74 | | | | | | | | | | | | | | | | | | | | | | | | | | | | | | | | | | | | | | | | | | | | | | |
| 0.971 – 0.990 (0.0382 – 0.0390) | 74 | 74 | 74 | | | | | | | | | | | | | | | | | | | | | | | | | | | | | | | | | | | | | | | | | | | | | | | |
| 0.991 – 1.010 (0.0390 – 0.0398) | 74 | 74 | | | | | | | | | | | | | | | | | | | | | | | | | | | | | | | | | | | | | | | | | | | | | | | | |
| 1.011 – 1.030 (0.0398 – 0.0406) | 74 | | | | | | | | | | | | | | | | | | | | | | | | | | | | | | | | | | | | | | | | | | | | | | | | | |

New lifter thickness mm (in.)

| Lifter No. | Thickness | Lifter No. | Thickness | Lifter No. | Thickness |
|---|---|---|---|---|---|
| 06 | 5.060 (0.1992) | 30 | 5.300 (0.2087) | 54 | 5.540 (0.2181) |
| 08 | 5.080 (0.2000) | 32 | 5.320 (0.2094) | 56 | 5.560 (0.2189) |
| 10 | 5.100 (0.2008) | 34 | 5.340 (0.2102) | 58 | 5.580 (0.2197) |
| 12 | 5.120 (0.2016) | 36 | 5.360 (0.2110) | 60 | 5.600 (0.2205) |
| 14 | 5.140 (0.2024) | 38 | 5.380 (0.2118) | 62 | 5.620 (0.2213) |
| 16 | 5.160 (0.2031) | 40 | 5.400 (0.2126) | 64 | 5.640 (0.2220) |
| 18 | 5.180 (0.2039) | 42 | 5.420 (0.2134) | 66 | 5.660 (0.2228) |
| 20 | 5.200 (0.2047) | 44 | 5.440 (0.2142) | 68 | 5.680 (0.2236) |
| 22 | 5.220 (0.2055) | 46 | 5.460 (0.2150) | 70 | 5.700 (0.2244) |
| 24 | 5.240 (0.2063) | 48 | 5.480 (0.2157) | 72 | 5.720 (0.2252) |
| 26 | 5.260 (0.2071) | 50 | 5.500 (0.2165) | 74 | 5.740 (0.2260) |
| 28 | 5.280 (0.2079) | 52 | 5.520 (0.2173) | | |

**Exhaust valve clearance (Cold):**
**0.25 – 0.35 mm (0.010 – 0.014 in.)**

EXAMPLE: The 5.340 mm (0.2102 in.) lifter is installed, and the measured clearance is 0.440 mm (0.0173 in.).
Replace the 5.340 mm (0.2102 in.) lifter with a new No. 48 lifter.

A79323



cardiagn.com

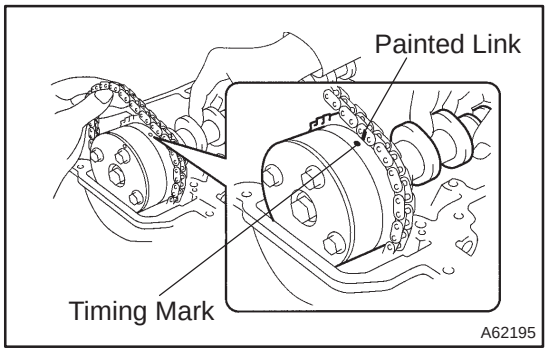


(m) Install the timing chain on the camshaft timing gear with the painted links aligned with the timing marks on the camshaft timing sprocket as shown in the illustration.

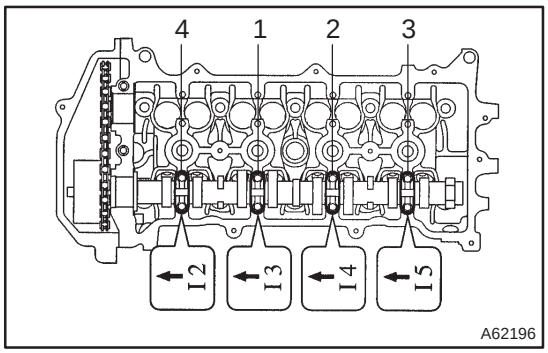


(n) Examine the front marks and numbers and tighten the bolts in the sequence shown in the illustration.
**Torque: 13 N·m (133 kgf·cm, 10 ft·lbf)**

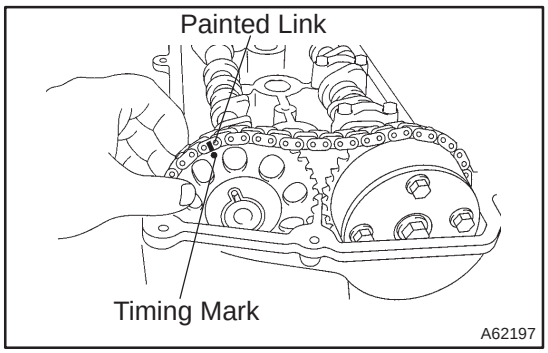


(o) Put the camshaft No.2 on the cylinder head with the painted links of the chain aligned with the timing mark on the camshaft timing sprocket.

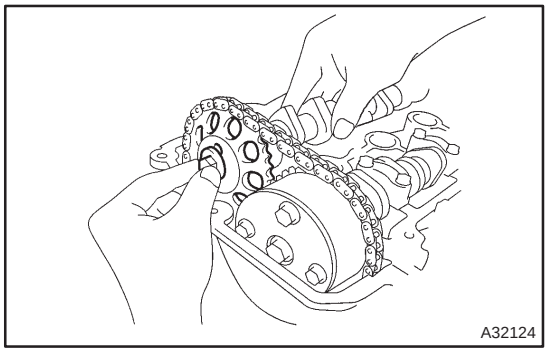


(p) Tighten the camshaft timing gear set bolt temporarily.

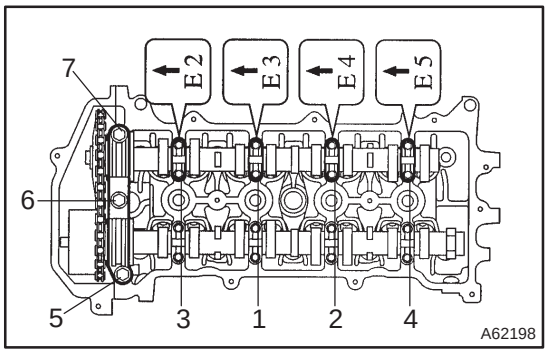


(q) Examine the front marks and numbers and tighten the bolts in the sequence shown in the illustration.
**Torque: 13 N·m (133 kgf·cm, 10 ft·lbf)**

(r) Install the bearing cap No. 1.
**Torque: 23 N·m (235 kgf·cm, 17 ft·lbf)**

cardiagn.com

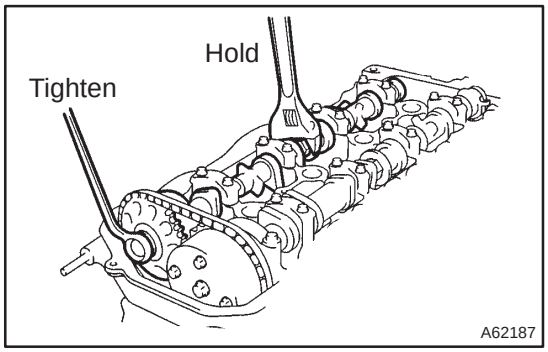


(s) Hold the camshaft with a wrench, tighten the camshaft timing gear set bolt.

**Torque: 54 N·m (551 kgf·cm, 40 ft·lbf)**

**NOTICE:**

**Be careful not damage the valve lifter.**

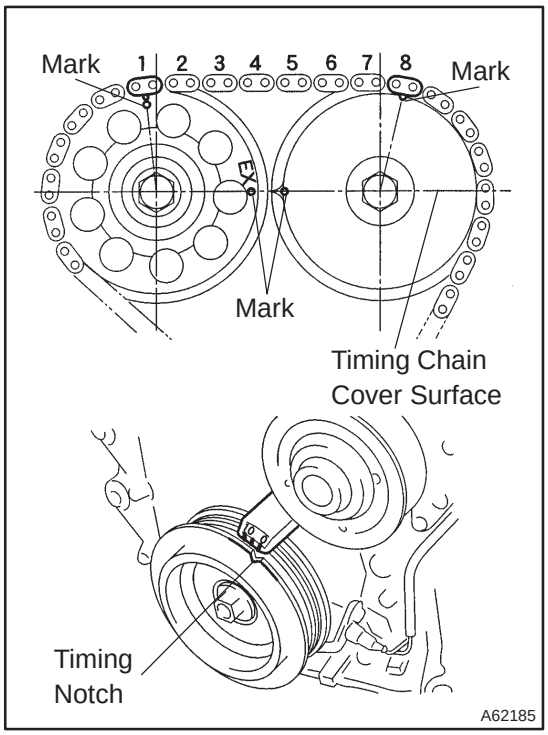


(t) Check the match marks on the 2 camshaft sprockets are aligned with each other and aligned with the painted links of the timing chain as shown in the illustration. Also, check the timing notch is aligned with the timing mark ”0” of the chain cover.

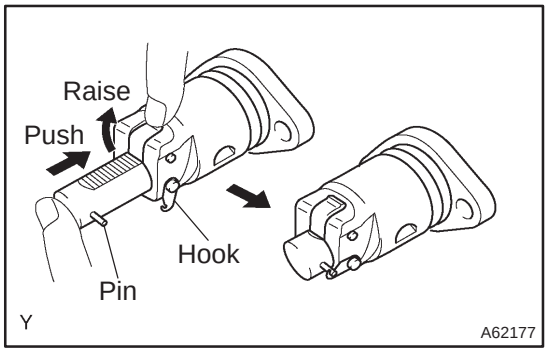


(u) Install chain tensioner.

(1) Check that the O–ring is clean, and set the hook as shown in the illustration.

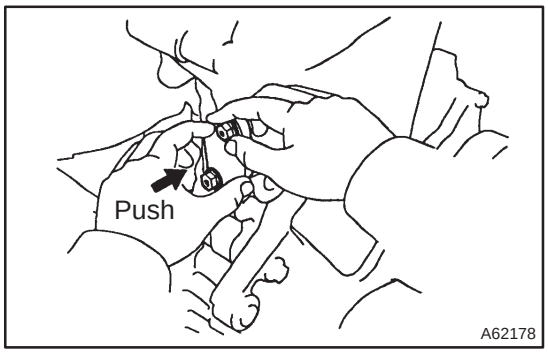


(2) Apply engine oil to the chain tensioner and install it with the 2 nuts.

**Torque: 9.0 N·m (92 kgf·cm, 80 in·lbf)**

**NOTICE:**

**If the hook released the plunger during installation, re–hook the plunger by the hook to fixit.**

cardiagn.com

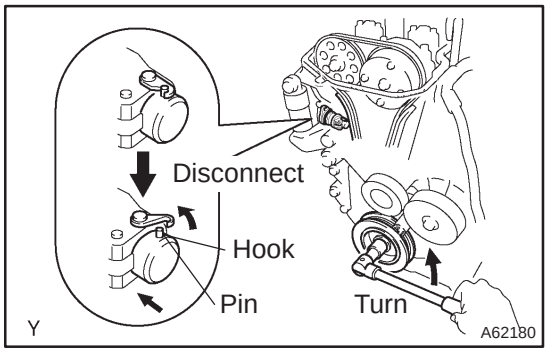


(3) Turn the crankshaft counterclockwise, and take the hook off the knock pin to release the plunger.

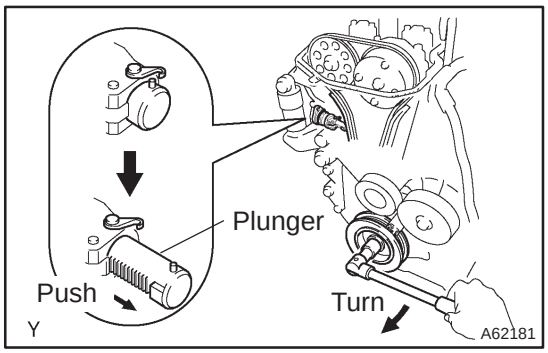


(4) Turn the crankshaft clockwise, and check that the plunger is extended.

HINT:
If the plunger does not be extended, press the slipper into the chain tensioner using a screwdriver so that the hook is took off from the knock pin and let the plunger can be extended.

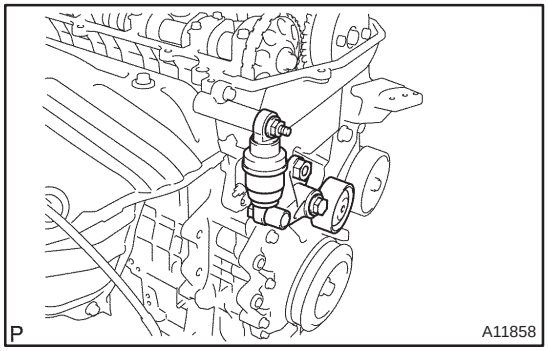


**16. INSTALL V–RIBBED BELT TENSIONER ASSY**

(a) Install the V–ribbed belt tensioner with the nut and bolt.
**Torque:**
**29 N·m (296 kgf·cm, 21 ft·lbf) for Nut**
**69 N·m (704 kgf·cm, 51 ft·lbf) for Bolt**

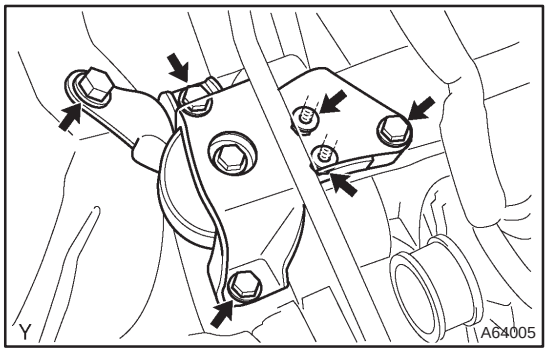


**17. INSTALL ENGINE MOUNTING INSULATOR SUB–ASSY RH**

(a) Install the engine mounting insulator with the 4 bolts and 2 nuts.
**Torque: 52 N·m (530 kgf·cm, 38 ft·lbf)**

cardiagn.com

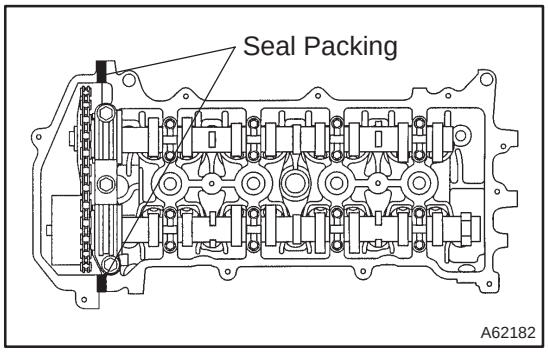


**18. INSTALL CYLINDER HEAD COVER SUB–ASSY**

(a) Remove any old packing (FIPG) material.

(b) Apply seal packing to the 2 locations as shown in the illustration.

**Seal packing: Part No. 08826–00080 or equivalent**

**NOTICE:**

- **Remove any oil from the contact surface.**
- **Install the cylinder head cover within 3 minutes after applying seal packing.**
- **Do not expose the seal to engine oil 2 hours after installing.**

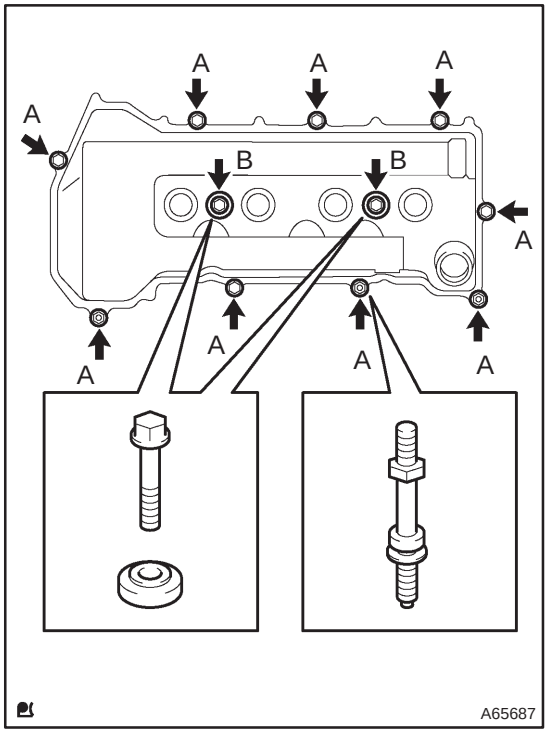


(c) Install the cylinder head cover and cable bracket with the 9 bolts, 2 seal washers and 2 nuts. Tighten the bolts and nuts uniformly in the several steps.

**Torque:**
**11 N·m (112 kgf·cm, 8 ft·lbf) for A**
**9.0 N·m (92 kgf·cm, 80 in·lbf) for B**

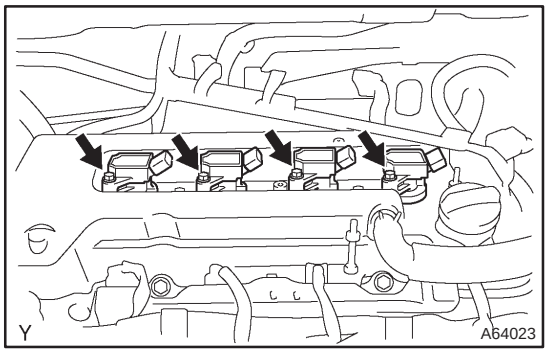


**19. INSTALL IGNITION COIL ASSY**

(a) Install the 4 ignition coils with the 4 bolts.

**Torque: 9.0 N·m (92 kgf·cm, 80 in.·lbf)**

cardiagn.com

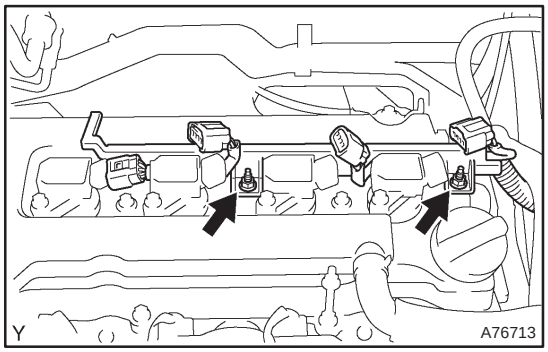


(b) Install the engine wire with the 2 nuts.
**Torque: 9.0 N·m (92 kgf·cm, 80 in.·lbf)**

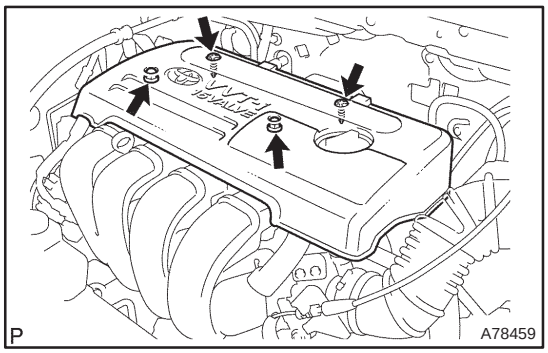


**20. INSTALL CYLINDER HEAD COVER NO.2**

(a) Install the cylinder head cover with the 2 nuts and 2 clips.
**Torque: 7.0 N·m (71 kgf·cm, 62 in.·lbf)**

**21. CHECK FOR ENGINE OIL LEAKS**

cardiagn.com